BESTVIEW

General Purpose Boundary Element Software Technology

BESTVIEW USER'S MANUAL
Volume II

BESTVIEW (Boundary Element Software Technology Viewer)
PREBEST and POSTBEST Translators
GPBEST Neutral File Description

Version 6.0

October, 1999

Boundary Element Software Technology Corporation
P.O. Box 310
Getzville, NY 14068-0310, USA

PROPRIETARY DOCUMENT NOTIFICATION

Boundary Element Software Technology Corporation (called Best Corporation, hereafter) reserves the right to make changes in specifications and other information contained in this document without prior notice.

Although due care has been taken to present accurate information, Best Corporation DISCLAIMS ALL WARRANTIES WITH RESPECT TO THE CONTENTS OF THIS DOCUMENT (INCLUDING WITHOUT LIMITATION WARRANTIES OF MERCHANTABILITY AND FITNESS FOR A PARTICULAR PURPOSE) EITHER EXPRESSED OR IMPLIED. Best Corporation SHALL NOT BE LIABLE FOR DAMAGES RESULTING FROM ANY ERROR CONTAINED HEREIN, INCLUDING, BUT NOT LIMITED TO, FOR ANY SPECIAL, INCIDENTAL OR CONSEQUENTIAL DAMAGES ARISING OUT OF, OR IN CONNECTION WITH, THE USE OF THIS DOCUMENT.

GPBEST™ is a trademark of Best Corporation.
BESTVIEW™ is a trademark of Best Corporation.

This software product and its documentation set are copyrighted and all rights are reserved by Best Corporation. Usage of this product is only allowed under the terms set forth in the GPBEST License Agreement. Any reproduction or distribution of this document, in whole or in part, without the prior written consent of Best Corporation is prohibited.

RESTRICTED RIGHTS NOTICE

- **If this software is furnished to a U.S. Department of Defense agency, the following applies**:

RESTRICTED RIGHTS LEGEND

''Use, duplication, or disclosure by the Government is subject to restrictions as set forth in subdivision (b)(3)(ii) of the Rights in Technical Data and Computer Software clause at DOD FAR SUP 52.227-7013. Best Corporation, P.O. Box 310, Getzville, NY 14068-0310.''

- **If this software is furnished to the National Aeronautics and Space Administration, the following applies**:

RESTRICTED RIGHTS LEGEND

This computer software is submitted with ''restricted rights.'' Use, duplication or disclosure is subject to the restrictions as set forth in NASA FAR SUP 18-52.227-79 (April 1985) ''Commercial Computer Software-Restricted Rights (April 1985).'' Best Corporation, P.O. Box 310, Getzville, NY 14068-0310. If the contract contains the Clause at 18-52.227-74 ''Rights in Data General'' then the ''Alternate III'' clause applies.

Copyright ©1993 and ©1995-1999 Boundary Element Software Technology Corporation
All rights reserved

If you would like to order more copies of this User Manual, please contact the Documentation Coordinator at Best Corporation. *U.S.A. orders:* All orders must be accompanied by a check or purchase order. Your order will be sent prepaid via UPS or fourth class mail and the shipping charges will be added to the invoice. F.O.B. will be the shipping point. Terms are net amount due within 30 days. *Outside U.S.A. orders:* Please contact Best Corporation for a quotation.

Part Number 970020

BESTVIEW User's Guide Comment Sheet (Release 6.0)

NAME : _____ DATE: _____

AFFILIATION : _____

ADDRESS : _____

TELEPHONE : _____

1. ERRORS/CORRECTIONS (Specify page, figure number, etc.)

_____

_____

_____

_____

_____

2. SUGGESTIONS/COMMENTS (e.g. overall manual organization and contents, future ideas, need for other manuals/primers, complaints, etc.)

_____

_____

_____

_____

_____

_____

_____

Please return to :

Dr. P. K. Banerjee
Boundary Element Software Technology Corporation
P.O. Box 310
Getzville, NY 14068-0310, USA

or phone (716) 639-1920

TABLE OF CONTENTS

SECTION **PAGE**

1.0 - Introduction 1.1
1.1 - BESTVIEW Overview 1.1
1.2 - Organization of this Manual 1.6
1.3 - Installing BESTVIEW 1.8
1.4 - Requesting a Password 1.9
1.5 - Getting to Know BESTVIEW 1.10
1.6 - Quick Start Section 1.13
1.6.1 - Starting BESTVIEW 1.14
1.6.2 - Running BESTVIEW to Create a NEUTRAL File 1.15
1.6.3 - Viewing Model Geometry From a NEUTRAL File 1.15
1.6.4 - Rotating a Model to Obtain an Isometric View 1.16
1.6.5 - Read in GPBEST Results and Display Deformed Geometry 1.17
1.6.6 - Display a Von-Mises Stress Fringe Plot 1.17
1.6.7 - Send a Plot of the Model Geometry to a Postscript Printer 1.18
1.6.8 - Quitting Bestview 1.18

2.0 - Global Commands 2.1
2.1 - Introduction 2.1
2.2 - CDRAW 2.4
2.3 - DRAW 2.6
2.4 - MODE 2.8
2.4.1 - WIRE MESH 2.8
2.4.2 - SHADED IMAGE 2.9
2.4.3 - LINE CONTOUR 2.9
2.4.4 - FRINGE PLOT 2.10
2.5 - HIGHLIGHT 2.11
2.6 - LIST 2.13
2.6.1 - COORDINATE FRAME 2.13
2.6.2 - DISTANCES 2.13
2.6.2.1 - NODES 2.14
2.6.2.2 - POINTS 2.14
2.6.3 - ELEMENT 2.15

SECTION **PAGE**

2.6.4 - GROUP 2.17
2.6.5 - LINE 2.19
2.6.6 - NODE 2.19
2.6.7 - POINT 2.20
2.6.8 - SCALAR FUNCTION 2.21
2.6.9 - SURFACE 2.23
2.6.10 - TRANSFORMATION 2.23
2.7 - DISPLAY OPTIONS 2.24
2.7.1 - ENTITY 2.24
2.7.1.1 - ALL 2.24
2.7.1.2 - COORDINATE FRAME 2.25
2.7.1.3 - ELEMENT 2.25
2.7.1.4 - GROUP 2.26
2.7.1.5 - LINE 2.26
2.7.1.6 - MESH 2.26
2.7.1.7 - NODE 2.26
2.7.1.8 - POINT 2.26
2.7.1.9 - SURFACE 2.27
2.7.1.10 - TRIAD 2.27
2.7.2 - COLOR 2.27
2.7.3 - FREE EDGE CHECK 2.32
2.7.4 - HIDDEN 2.33
2.7.5 - ICONS 2.34
2.7.6 - LABEL 2.35
2.7.6.1 - ALL 2.35
2.7.6.2 - COORDINATE FRAME 2.36
2.7.6.3 - ELEMENT 2.36
2.7.6.4 - GROUP 2.37
2.7.6.5 - IJK 2.37
2.7.6.6 - LINE 2.37
2.7.6.7 - MESH 2.37
2.7.6.8 - NODE 2.38
2.7.6.9 - PARAMETRIC DIR 2.38
2.7.6.10 - POINT 2.39

SECTION **PAGE**

2.7.6.11 - SURFACE 2.39
2.7.6.12 - MODEL MESH NUMBERS 2.39
2.7.7 - SHRINK 2.40
2.7.8 - STATUS 2.41
2.7.9 - SURFACE FILL 2.41
2.7.10 - TITLE 2.42
2.7.11 - INTERNAL MESH 2.45
2.7.12 - INCO IGES AUTO MESH 2.47
2.8 - VIEW OPTIONS 2.48
2.8.1 - LOOK 2.48
2.8.2 - MAGNIFY 2.50
2.8.3 - PAN 2.51
2.8.4 - PERSPECTIVE 2.53
2.8.5 - RESTORE 2.53
2.8.6 - ROTATE 2.54
2.8.7 - STATUS 2.60
2.8.8 - VIEW PORT 2.61
2.8.9 - ZOOM 2.64
2.8.10 - Z CLIP 2.65
2.8.11 - SHOW BOUNDARY CONDITIONS 2.66
2.8.12 - STORE VIEW 2.70
2.8.13 - RECALL VIEW 2.71
2.8.14 - UNDO VIEW 2.72
2.9 - GROUPS 2.73
2.9.1 - ADD ENTITY 2.73
2.9.2 - ERASE ENTITY 2.76
2.9.3 - RENAME GROUP 2.78
2.9.4 - DELETE 2.79
2.9.5 - RESULT ON GROUP 2.81
2.9.6 - QUALITY CHECK 2.82
2.9.7 - PROPERTY CALC 2.83
2.10 - PLOT 2.85
2.11 - HARDCOPY 2.86
2.11.1 - ENCAPSULATED POSTSCRIPT 2.86

SECTION **PAGE**

2.11.2 - HP-GL/2 . . . . . 2.87
2.11.3 - STANDARD POSTSCRIPT 2.89
2.11.4 - TEKTRONIX 2.91
2.11.5 - SCREEN IMAGE 2.91
2.12 - DIGITIZER 2.93
2.12.1 - GRID SET 2.93
2.12.2 - Z VALUE 2.94
2.13 - SET DIGITIZER 2.95
2.14 - LIMITATIONS 2.97

3.0 - Defining The Geometry 3.1
3.1 - Introduction 3.1
3.1.1 - Basic Geometric Entities 3.1
3.1.2 - Duplication of Entities 3.1
3.1.3 - Representation of Basic Entities 3.1
3.2 - The DEFINE GEOMETRY Option 3.3
3.2.1 - General Tips for Efficient Geometric Modeling 3.4
3.3 - COORDINATE FRAME 3.7
3.3.1 - ACTIVE 3.7
3.3.2 - CARTESIAN 3.7
3.3.3 - CYLINDRICAL 3.9
3.3.4 - DELETE 3.10
3.3.5 - ROTATE 3.11
3.3.6 - SPHERICAL 3.12
3.3.7 - TRANSLATE 3.14
3.4 - INTERSECTION 3.15
3.4.1 - LINE 3.15
3.4.1.1 - LINE OPTION 3.15
3.4.1.2 - SURFACE 3.17
3.4.2 - SURFACE 3.19
3.5 - LINE 3.21
3.5.1 - ARC 3.21
3.5.2 - BREAK 3.22
3.5.3 - CONIC 3.24
3.5.4 - CUBIC 3.25

SECTION **PAGE**

3.5.5 - DELETE 3.26
3.5.6 - ENTER 3.27
3.5.7 - EQUATION 3.27
3.5.8 - EXTEND 3.28
3.5.9 - FILLET 3.30
3.5.10 - LEAST SQUARES 3.33
3.5.11 - MERGE 3.34
3.5.12 - MIRROR 3.35
3.5.13 - QUADRATIC 3.36
3.5.14 - REVERSE 3.36
3.5.15 - ROTATE 3.37
3.5.16 - SCALE 3.38
3.5.17 - SMOOTH 3.38
3.5.18 - SPLINE 3.41
3.5.19 - SWEEP 3.42
3.5.20 - TRANSLATE 3.43
3.6 - POINT 3.44
3.6.1 - DELETE 3.44
3.6.2 - ENTER 3.44
3.6.3 - LINE INTERPOLATE 3.45
3.6.4 - MIRROR 3.46
3.6.5 - ON LINE 3.46
3.6.6 - ON NODE 3.46
3.6.7 - ON SURFACE 3.47
3.6.8 - POINT INTERPOLATE 3.47
3.6.9 - ROTATE 3.49
3.6.10 - SCALE 3.49
3.6.11 - SURFACE INTERPOLATE 3.49
3.6.12 - TRANSLATE 3.51
3.7 - SURFACE 3.52
3.7.1 - BREAK 3.52
3.7.2 - DELETE 3.54
3.7.3 - ENTER 3.54
3.7.4 - EQUATION 3.56

SECTION **PAGE**

3.7.5 - EXTRUDE . . . 3.56
3.7.6 - FOUR EDGES . . . 3.59
3.7.7 - MIRROR . . . 3.60
3.7.8 - PARAMETRIC . . . 3.61
3.7.9 - REVERSE . . . 3.61
3.7.10 - ROTATE . . . 3.61
3.7.11 - SCALE . . . 3.64
3.7.12 - SMOOTH . . . 3.65
3.7.13 - THREE EDGES . . . 3.67
3.7.14 - TRANSLATE . . . 3.68
3.8 - ASSEMBLE MODELS . . . 3.70
3.9 - IGES . . . 3.75
3.9.1 - Supported IGES Entities . . . 3.75
3.9.2 - User Guidelines . . . 3.75
3.9.3 - BESTVIEW Session . . . 3.78
3.9.4 - AUTOMESH IGES . . . 3.80
3.10 - IMPORT . . . 3.83
3.11 - LIMITATIONS . . . 3.87

4.0 - Generating The Mesh . . . 4.1
4.1 - Introduction . . . 4.1
4.1.1 - Mesh Information From Compatible Patches . . . 4.1
4.1.2 - Mesh Generation at the Nodal Level . . . 4.1
4.1.3 - Working with GPBEST Later . . . 4.2
4.1.4 - An Example . . . 4.2
4.2 - List of Options . . . 4.5
4.2.1 - Element Types Supported . . . 4.6
4.3 - COINCIDENT NODES . . . 4.7
4.4 - CREATE . . . 4.8
4.4.1 - ELEMENT LINE . . . 4.9
4.4.2 - ELEMENT SURFACE . . . 4.11
4.4.3 - NODE LINE . . . 4.14
4.4.4 - NODE SURFACE . . . 4.15
4.5 - ELEMENT . . . 4.16
4.5.1 - CREATE . . . 4.16

SECTION **PAGE**

4.5.2 - DELETE 4.17
4.5.3 - MIRROR 4.18
4.5.4 - NORMAL COPY 4.19
4.5.5 - ROTATE 4.23
4.5.6 - SCALE 4.25
4.5.7 - TRANSLATE 4.25
4.5.8 - REVERSE 4.27
4.6 - EQUIVALENCE 4.28
4.7 - FAST MESH 4.29
4.8 - NODE 4.31
4.8.1 - CREATE COORDINATE 4.31
4.8.2 - CREATE LINE 4.32
4.8.3 - CREATE NODE 4.33
4.8.4 - CREATE POINT 4.33
4.8.5 - CREATE SURFACE 4.34
4.8.6 - DELETE 4.35
4.8.7 - MIRROR 4.35
4.8.8 - ROTATE 4.36
4.8.9 - TRANSLATE 4.36
4.9 - TOLERANCE 4.37
4.10 - TRANSITION 4.38
4.11 - QUALITY CHECK ATTRIBUTES 4.40
4.11.1 - DEACTIVATE 4.41
4.11.2 - MIN. ANGLE 4.41
4.11.3 - MAX. ANGLE 4.42
4.11.4 - WARPAGE ANGLE 4.42
4.11.5 - TANGENT MIDNODE 4.43
4.11.6 - NORMAL MIDNODE 4.43
4.11.7 - JACOBIAN RATIO 4.44
4.11.8 - SEVERITY 4.44
4.11.9 - CHANGE RANGE 4.46
4.12 - BREAK MODEL 4.47
4.13 - LIMITATIONS 4.49

SECTION **PAGE**

5.0 - Preparing Data For GPBEST 5.1
5.1 - Introduction 5.1
5.2 - PREPARE ANALYSIS OPTIONS 5.2
5.3 - List of Options 5.4
5.3.1 - CASE 5.5
5.3.1.1 - DEFAULTS 5.5
5.3.1.2 - TITLE 5.5
5.3.1.3 - DIMENSION 5.6
5.3.1.4 - ANALYSIS TYPE 5.7
5.3.1.5 - MISCELLANEOUS 5.8
5.3.2 - MATERIAL 5.11
5.3.2.1 - DEFAULTS 5.11
5.3.2.2 - DEFINE 5.11
5.3.3 - GMR 5.14
5.3.3.1 - HOLE ELEMENT 5.19
5.3.3.2 - SAMPLING POINTS 5.19
5.3.3.3 - SPECIAL ZONE 5.19
5.3.3.4 - NEXT GMR 5.20
5.3.3.5 - INTERFACES WITH A GAP CARD 5.27
5.3.4 - BCSET 5.31
5.3.5 - BODY FORCE 5.42
5.3.5.1 - CENTRIFUGAL 5.42
5.3.5.2 - INERTIA 5.44
5.3.5.3 - SOURCE 5.45
5.3.5.4 - THERMAL 5.46
5.4 - LIMITATIONS 5.48

6.0 - Post Processing GPBEST Results 6.1
6.1 - Introduction 6.1
6.2 - List of Options 6.2
6.3 - READ GPBEST RESULTS 6.3
6.4 - CONTOURS 6.6
6.4.1 - CONTOUR RANGE 6.6
6.4.2 - FUNCTION TYPE 6.7
6.4.3 - An Example 6.8

SECTION **PAGE**

6.5 - DEFINE COLOR BAR 6.12
6.6 - DEFORMED GEOMETRY 6.14
6.7 - XY-PLOT 6.17
6.7.1 - Plotting Data from a File 6.17
6.7.1.1 - Reading Multiple Data Files in the Same Session 6.20
6.7.2 - Plotting Nodal Results 6.21
6.7.3 - TITLE 6.29
6.7.3.1 - AXIS 6.29
6.7.3.2 - LEGEND 6.29
6.7.3.3 - HEADER 6.29
6.7.3.4 - POSITION HEADER 6.30
6.7.4 - ICON DISPLAY 6.30
6.7.5 - LINE DISPLAY 6.32
6.7.6 - LEGEND 6.34
6.7.6.1 - LEGEND BLOCK 6.34
6.7.6.2 - MOVE LEGEND 6.34
6.7.7 - SCALE 6.35
6.7.7.1 - AUTOMATIC 6.35
6.7.7.2 - MANUAL 6.36
6.7.8 - FIT 6.38
6.7.8.1 - LINEAR 6.38
6.7.8.2 - SPLINE 6.40
6.7.9 - SAVE GRAPH FILE 6.40
6.7.10 - Making a HARDCOPY of the Graph 6.40
6.8 - FILE SCALAR RESULTS 6.41
6.9 - SWEEP TO XY DATA 6.46
6.10 - LIMITATIONS 6.48

7.0 - Notes On Frequently Used Features 7.1
7.1 - Introduction 7.1
7.2 - SAVE Option 7.2
7.3 - INITIALIZE Option 7.3
7.4 - EXIT Option 7.4
7.5 - QUICK DISPLAY GUIDE 7.5
7.5.1 - Rotating a Model and Working With Labels 7.5

SECTION **PAGE**

7.5.2 - Hidden Lines, Shaded Images, Labels and Icons 7.9
7.5.3 - Fringe Plots, Contour Plots, Deformed Shapes 7.11
7.5.4 - Changing Contour Range and Using Color Bar 7.15
7.6 - Helpful Hints 7.17

8.0 - A Tutorial On Bestview 8.1
8.1 - Problem #1 Rectangular Beam in Tension 8.1
8.2 - Problem #2 Cantilever Beam 8.11
8.3 - Problem #3 Spherical Pressure Vessel 8.23
8.4 - Problem #4 3-D Cantilever Beam with Distributed Static Force 8.37
8.5 - Problem #5 Importing IGES Data File 8.49
8.6 - Problem #6 Creating Surfaces From IGES File 8.53
8.7 - Problem #7 Importing ANSYS Data File 8.57

9.1 - Introduction 9.1
9.1.1 - Translators 9.3
9.1.2 - Data Flow 9.4
9.2 - PREBEST Translator 9.5
9.2.1 - PREBEST Files 9.9
9.2.2 - Features of PREBEST 9.9
9.2.3 - Element Quality Checks 9.10
9.2.4 - Degree of Severity On Quality Checks 9.12
9.3 - Modeling Requirements 9.15
9.3.1 - Overview 9.16
9.3.2 - Coordinate Systems 9.16
9.3.3 - Nodes 9.17
9.3.4 - Elements 9.18
9.3.5 - Materials 9.19
9.3.5.1 - Defining Material Properties 9.24
9.3.5.2 - Assigning Material Properties 9.24
9.3.6 - Element Properties 9.24
9.3.6.1 - GMR Partitioning 9.26
9.3.6.2 - Surface Partitioning 9.26
9.3.7 - GMRs (GROUPs) 9.27
9.3.7.1 - Modeling Inelastic Regions 9.32

SECTION **PAGE**

9.3.7.2 - Construction Groups 9.33
9.3.7.3 - Summary of Group Name Rules 9.35
9.3.8 - Interfaces Between GMRs 9.35
9.3.8.1 - General Remarks 9.36
9.3.8.2 - Functional Variation Across Interfaces 9.36
9.3.8.3 - Entity Numbering at Interfaces 9.37
9.3.8.4 - Cyclic-Symmetry Interfaces 9.40
9.3.9 - Sampling Surfaces 9.44
9.3.10 - Sampling Points 9.46
9.3.11 - Symmetry 9.49
9.3.12 - Boundary Conditions 9.51
9.3.13 - Body Forces 9.52
9.3.14 - Other Modeling Considerations 9.58
9.4 - POSTBEST Translator 9.59
9.4.1 - POSTBEST Files 9.60
9.4.2 - Renumbering Entities 9.60
9.4.3 - Nodal Tractions 9.61
9.4.4 - GPBEST Data File Considerations 9.62
9.4.5 - GPBEST Results 9.64
9.4.6 - Controlling Result Output 9.65
9.5 - PATRAN 9.69
9.5.1 - PREBEST Using PATRAN 9.70
9.5.1.1 - Supported PATRAN Neutral File Packets 9.71
9.5.1.2 - Supported PATRAN Elements 9.71
9.5.1.3 - Modeling Geometry in PATRAN 9.72
9.5.1.4 - Modeling Boundary Conditions in PATRAN 9.74
9.5.2 - POSTBEST Using PATRAN 9.75
9.5.2.1 - PATRAN Result Files 9.77
9.5.2.2 - PATRAN-3 Result Template Files 9.77
9.6 - I-DEAS 9.83
9.6.1 - PREBEST Using I-DEAS 9.90
9.6.1.1 - Supproted I-DEAS Universal File Blocks 9.91
9.6.1.2 - Supported I-DEAS Elements 9.91
9.6.1.3 - Modeling Geometry in I-DEAS 9.91

SECTION **PAGE**

9.6.1.4 - Scaling of Dimensions in I-DEAS 9.94
9.6.2 - POSTBEST Using I-DEAS 9.96
9.6.2.1 - I-DEAS Results 9.97
9.7 - HYPERMESH 9.97
9.7.1 - PREBEST Using HYPERMESH 9.102
9.7.1.1 - Supported HYPERMESH Neutral File Packets 9.102
9.7.1.2 - Supported HYPERMESH Elements 9.102
9.7.1.3 - Modeling Geometry in HYPERMESH 9.103
9.7.1.4 - Modeling Boundary Conditions in HYPERMESH 9.105
9.7.2 - POSTBEST Using HYPERMESH 9.107
9.7.2.1 - HYPERMESH Result Files 9.108
9.8 - FEMAP 9.108
9.8.1 - PREBEST Using FEMAP 9.109
9.8.1.1 - Supported FEMAP Neutral File Blocks 9.109
9.8.1.2 - Supported FEMAP Elements 9.109
9.8.1.3 - Modeling Geometry in FEMAP 9.110
9.8.1.4 - Modeling Boundary Conditions in FEMAP 9.113
9.8.2 - POSTBEST Using FEMAP 9.114
9.8.2.1 - FEMAP Results 9.115

10.0 - GPBEST Neutral File Format 10.1
10.0.1 - Outline of Neutral File 10.4
10.1 - Problem (Case Input) Description 10.6
10.1.1 - Main Header 10.6
10.2 - Material Description 10.12
10.2.1 - Material Header 10.13
10.2.2 - Temperature Input Values for Temperature-Dependent Material 10.16
10.2.3 - Elastic Modulus Input Values for Temperature-Dependent Material . . . 10.17
10.2.4 - Thermal Coefficient Input Values for Temperature-Dependent Material . 10.18
10.2.5 - Compliance Matrix 10.19
10.2.6 - Stiffness Matrix 10.20
10.2.7 - Thermal Coefficient of Expansion Tensor 10.21
10.2.8 - Conductivity Tensor 10.22
10.2.9 - Orientation Angle/Vector 10.23

SECTION **PAGE**

10.3 - GMR Description 10.24
10.3.1 - GMR Header 10.24
10.3.2 - Nodal Coordinates 10.27
10.3.3 - Boundary Element Connectivity 10.29
10.3.4 - Hole Element Connectivity 10.33
10.3.5 - Sampling Surface Element Connectivity 10.35
10.4 - Interface Description 10.36
10.4.1 - Interface Header 10.36
10.4.2 - First Geometry Set Definition 10.37
10.4.3 - Element List - 1 . . . . . 10.38
10.4.4 - Source Point List - 1 . . . . . 10.39
10.4.5 - Second Geometry Set Definition 10.40
10.4.6 - Element List - 2 . . . . . 10.41
10.4.7 - Source Point List - 2 . . . . . 10.42
10.4.8 - Fit, Offset and Contact Interface Record 10.43
10.4.9 - Thermal and Generalized Convection Record 10.44
10.4.10 - Spring Interface Record 10.45
10.4.11 - Interface Symmetry Record 10.46
10.5 - Boundary Condition Description 10.47
10.5.1 - Boundary Condition Header 10.47
10.5.2 - Geometry Definition 10.50
10.5.3 - Element List 10.51
10.5.4 - Source Point List 10.52
10.5.5 - Spring or Convection Condition 10.53
10.5.6 - List of Time Values 10.54
10.5.7 - Type of Degree of Freedom 10.55
10.5.8 - Value of Degree of Freedom 10.56
10.6 - Body Force Description 10.57
10.6.1 - Body Force Header 10.57
10.6.2 - Thermal Body Force Header 10.58
10.6.2.1 - List of Time Values 10.59
10.6.2.2 - Continuous Thermal Variation Values of Polynomial Terms . . . 10.61

SECTION **PAGE**

10.6.2.3 - Nodal or Least Square Variation Nodal Temperature Values . . . 10.64
10.6.3 - Centrifugal Body Force Header 10.67
10.6.3.1 - Reference Point and Direction Record 10.68
10.6.3.2 - List of Time Values 10.69
10.6.3.3 - Speeds of Rotation 10.71
10.6.4 - Inertial Body Force Header 10.73
10.6.4.1 - Direction Record 10.74
10.6.4.2 - List of Time Values 10.75
10.6.4.3 - Acceleration Values 10.77
10.6.5 - Generalized Plane Stress/Strain Body Force Header 10.79
10.6.5.1 - List of Time Values 10.80
10.6.5.2 - Values of Polynomial Terms 10.82
10.7 - Result Description 10.85
10.7.1 - Result Header 10.85
10.7.2 - Boundary Element Scalar Results (temperature, flux, normal displacement) 10.88
10.7.3 - Boundary Element Vector Results (displacement and tractions) 10.90
10.7.4 - Boundary Element Normal Vector 10.91
10.7.5 - Hole Element Scalar Results (temperature, flux) 10.92
10.7.6 - Boundary Element Load Calculation (heat and/or load balance) 10.93
10.7.7 - Hole Element Load Calculation (heat and/or load balance) 10.94
10.7.8 - Nodal-Based Scalar Results (temperature) 10.95
10.7.9 - Nodal-Based Vector Results (displacements) 10.97
10.7.10 - Nodal-Based Stress Results (stresses) 10.98
10.7.11 - Nodal-Based Strain Results (strains) 10.100
10.7.12 - Nodal-Based Plastic Strain Results (plastic strains) 10.102

1.0 INTRODUCTION

1.1 BESTVIEW OVERVIEW

The Boundary Element Solutions Technology VIEWer (BESTVIEW) is a graphics software system that helps in the generation and viewing of a structural model, as well as preparation of input data for subsequent analysis through GPBEST. With the results from the analysis module (GPBEST), the structural behavior may be visualized through BESTVIEW. The primary objective of the software is outlined as follows:

1. To be used as a pre-processor for defining the model and generating data file for analysis through GPBEST.

2. To be used as a post-processor for displaying results after a successful analysis through GPBEST.

This manual outlines all of the basic commands of BESTVIEW and highlights some of the finer aspects of using this software. Tutorial examples are provided in the final chapter and figures are given at all the relevant places in order to clarify the option being discussed.

BESTVIEW has many options for creation and alteration of models and a wide range of options for displaying any model in the most convenient manner. The software works under the X-windows environment, enabling greater flexibility under different hardware platforms.

The new features in the current release of BESTVIEW are listed in Table 1.1 and Table 1.2. Planned enhancements of the program are listed in Table 1.3.

It is important to understand clearly how BESTVIEW fits into the overall design and analysis process. It is not intended to be an all-purpose tool. It has a definite scope, and the user should be aware of what its intended purpose is in order to use it properly. Different users prefer different modeling methods, taking into consideration their own experience with modeling and analysis programs. Therefore, the following suggestions are offered as a starting point.

<u>Post-Processing GPBEST Results</u>

The BESTVIEW program can be effectively used to post-process GPBEST results on any boundary element model. Since boundary element models are somewhat coarse compared with corresponding finite element models, the fringe plotting capability in BESTVIEW is superior to those found in FEM programs. Some users may find it advantageous to do all post-processing in BESTVIEW.

Using BESTVIEW to Apply Boundary Conditions

Some users may prefer to do their pre-processing in an external FEM program, such as PATRAN, I-DEAS, HYPERMESH, etc. However, they may still find it convenient to import their model into BESTVIEW in order to apply loads and boundary conditions. Surface loads and boundary conditions are applied somewhat differently in the BEM as opposed to the FEM. The ease with which BEM-type loads and boundary conditions can be applied makes it convenient to use BESTVIEW for this purpose.

Working With Small Models

For problems involving one hundred elements or less, the BESTVIEW program can be used to generate geometry from scratch, then mesh the model and output a GPBEST data file. Most of the tutorial problems and examples given in this manual fall into this category. For these problems, BESTVIEW can be used for the entire modeling process.

Working With Large Models

Models with over 2500 elements are considered to be ‘‘large.’’ In the finite element method (FEM), a model consisting of 2500 elements would be considered small or medium-sized. However, recall that the corresponding boundary element model only requires a surface mesh. Hence, the BEM model will require far fewer elements than the corresponding FEM model.

BESTVIEW can be used to perform specialized tasks with large models. Post-processing can be performed easily. However, instead of creating geometry directly in BESTVIEW, many users may elect to use their own modeling program, such as PATRAN, I-DEAS, Pro-Engineer, ANSYS, etc. to create large models and generate the mesh. However, the resulting mesh can still be imported into BESTVIEW, where boundary conditions can be applied and a GPBEST data file generated.

Specifically, if you are using PATRAN or I-DEAS, another option is available. If the BEM model, material properties, GMRs, and boundary conditions have all been defined in PATRAN or I-DEAS, the PREBEST translator can be used to create a GPBEST input file directly. Thus, the BESTVIEW program can be bypassed during the pre-processing phase.

Working With Medium-Sized Models

Problems larger than 100 elements but under 2500 elements are considered ‘‘medium-sized.’’ For problems in this category, the user may elect to do some geometry-creation inside BESTVIEW, especially if the geometry and meshing requirements are not too severe. However, if the user is comfortable with another modeling program, work may be performed in that program and the mesh can then be imported into BESTVIEW.

TABLE 1.1
WHAT IS NEW IN BESTVIEW, RELEASE 6.0

- IGES import has been significantly enhanced
- For elasticity problems, a thermal body force may now be defined in BESTVIEW
- BREAK-MODEL permits easy group (GMR) definition from a complex model
- SWEEP-TO-XY DATA allows the user to condense the voluminous results from an acoustic analysis into a simple XY data file format
- Nodes and elements from ANSYS can now be imported into BESTVIEW (IMPORT option)

TABLE 1.2
WHAT WAS NEW IN BESTVIEW, RELEASE 6.0

- Release 6.0 is considerably faster than the previous release
- Data preparation has been enhanced to support contact problems as well as coupled and uncoupled structural acoustics problems
- There is now an option to turn off the interior mesh while post-processing in 2-D problems
- Color and gray-scale postscript files can be generated through the HARDCOPY - POSTSCRIPT SCRN.IMG option
- The user can now store, recall and undo viewing transformations
- IGES import has been enhanced to support trimmed surfaces and surfaces of revolution
- Plotting with hidden line display is considerably faster
- Time plots are supported for xy plots where the results at a node can be plotted over a range of time steps
- An option to post-process scalar results (other than through the GPBEST neutral file) has been implemented. Users can define connectivity and results in an external file
- The READ-GPBEST-RES option supports neutral files generated by GPBEST version 5.0 as well as the previous versions

TABLE 1.3
PLANNED ADDITIONAL FACILITIES FOR RELEASE 6.1

- User-friendly motif graphical interface
- Support for hardware rotations
- Larger problem size limits

1.2 ORGANIZATION OF THIS MANUAL

The manual has ten chapters, each defining a specific application of BESTVIEW. The first chapter briefly discusses the installation process and some of the aspects that you will be dealing with while working with BESTVIEW. The second chapter presents the GLOBAL COMMANDS. These commands, or options, are available to you almost always in both the pre- and post-processing phases. Generally, these options appear in a slightly different color below the available sub-options (if any) of the option you are working with.

In the third chapter, the options for defining a model geometry are outlined. We offer an extensive sub-option list for dealing with the generation and modification of geometrical entities such as points, lines and surfaces. Incidentally, the term *patch* is used quite often in this manual. A *patch* is the same as a surface. The third chapter also examines *importing* model data from other CAD/CAM software into BESTVIEW through the IGES protocol. You will also become acquainted with creating a complete model by generating components and, finally, using an assembly option. In the fourth chapter, a few commands for generating and editing mesh entities (i.e., elements and nodes) are presented. Various sub-options are available to you, and a judicious choice will allow you to build the necessary mesh quite easily. Some of the finer implications of each sub-option are featured, along with examples and figures.

The fifth chapter describes how to use BESTVIEW's options to prepare data for GPBEST. The sub-options used in this chapter are basically the major *keywords* used in the GPBEST manual. Although not necessary, it would be of great help if you preview the GPBEST manual before using this segment of BESTVIEW. We will be referring to the GPBEST manual in order to expound upon a specific sub-option when necessary. The sixth chapter presents all the options available for post-processing a model through BESTVIEW. In this chapter, the contour options, fringe plots, XY-plots and deformed configurations are described. In the seventh chapter, you will learn a few more very useful features such as saving the model file, exiting from BESTVIEW, and using the initializing routine to clean the database if necessary. There is also a brief discussion describing what options to select to get a specific display of a model. Chapter seven also describes a few helpful hints, which should assist you in working with BESTVIEW more efficiently.

In chapter eight, four examples are demonstrated, step-by-step, from beginning to end. The first example is a simple *single-region* model, where the data file for GPBEST is generated, and the neutral-file information is read in after analysis and the results are viewed. The second example is similar to the first, except the model is somewhat more complex in the second problem. In the third example, we have tried to show you how you can use the IGES option to import models from other software and possibly edit them to get the proper definition in BESTVIEW. In the last example, we have dealt with a *multi-region* model just to give you a feel for the small differences in the pre-processing session, compared to a *single-region* model.

The last two chapters contain reference material useful to BESTVIEW and GPBEST users. Chapter 9 describes the graphics translators. These enable the user to use commercial CAD programs such as PATRAN and I-DEAS for pre- and post-processing. Chapter 10 describes the GPBEST neutral file format, which contains modeling information as well as analysis results. This

chapter is useful for users who desire to write their own translator to convert GPBEST model and results information into their own CAD system.

At the end of each chapter, you will find listed some of the limitations of the software.

1.3 INSTALLING BESTVIEW

The installation of BESTVIEW occurs automatically when a user installs GPBEST. See Sections 1.2 and 1.4 of the GPBEST User's Manual for full instructions on how to install GPBEST and BESTVIEW. The GPBEST password and the BESTVIEW password are one in the same. However, BESTVIEW users must obtain a password with the appropriate permission in order to run BESTVIEW.

1.4 REQUESTING A PASSWORD

If the password information was not included with your software package, please make a copy of the password request form in Section 1.5 of the GPBEST User's Manual. Fill in the relevant information, and either fax or mail it to us:

Fax: (716) 639-1919

Mail: Best Software Corporation
P.O. Box 310
Getzville, NY 14068-0310
USA

1.5 GETTING TO KNOW BESTVIEW

When you work with BESTVIEW, most of the options that you *select* work on an interactive level. The term *select* will henceforth imply that you place the cursor over the option you would like to use and click the left mouse button. Some of the queries asked by BESTVIEW (sometimes referred to as *system* in later chapters) appear in a special box (referred to as the *prompt window*) to the left of the screen. Sometimes, you will get certain default values for the chosen option. In the event that you want the same value, select the OK button. If you wish to give a value other than the default, press the ESC key (or alternately select the CANCEL button) to clear the prompt window. Then *enter* the value you want. Henceforth, whenever we say *enter*, it implies typing the relevant quantity and hitting the CARRIAGE RETURN (CR) key. To come out of the prompt window, select CANCEL or press the ESC key a couple of times. Sometimes however, the system queries come in the window from where you invoked BESTVIEW (we would refer to this window as the command window). (see Fig. 1.5.1 below)

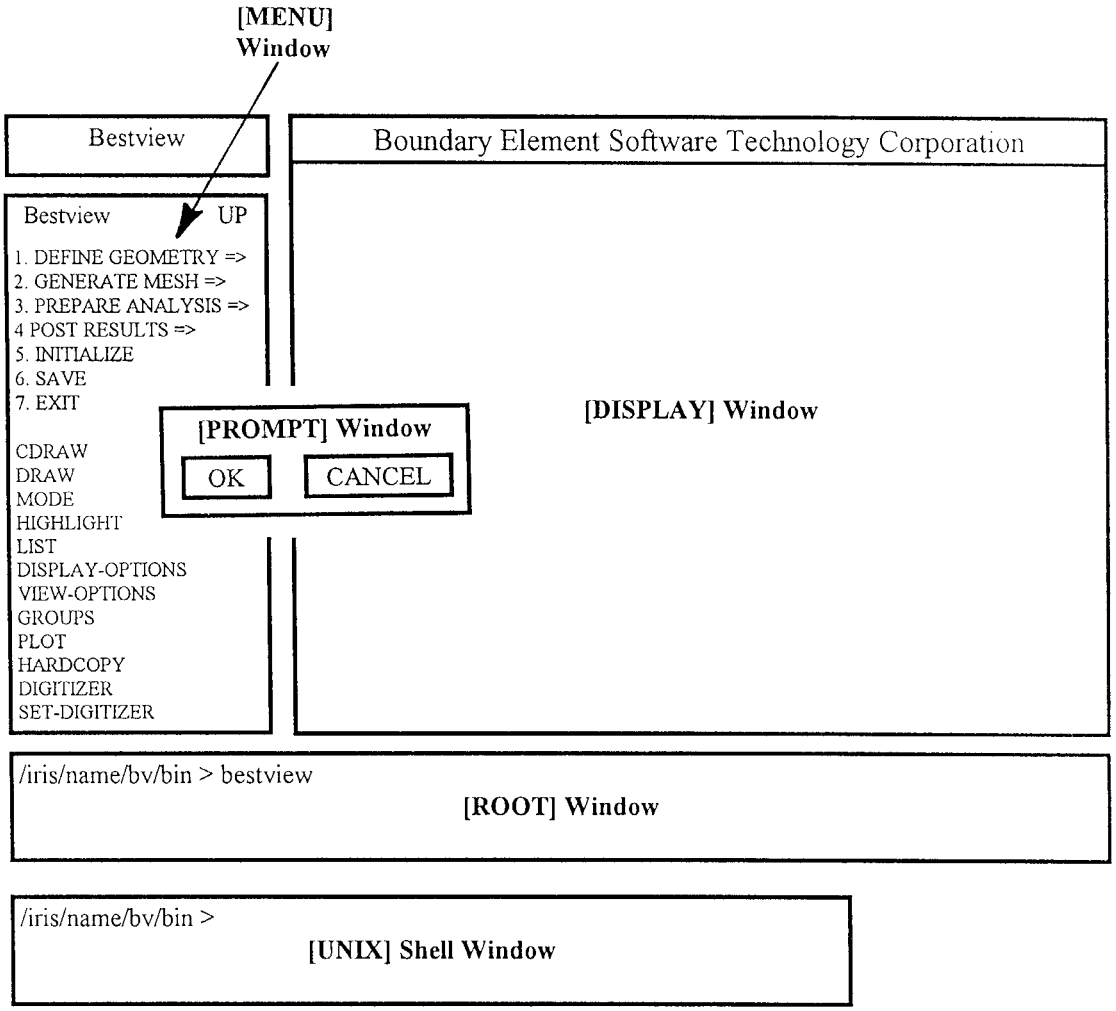

Fig. 1.5.1 Window Positions for BESTVIEW

For this reason, you should first orient your command window in such a way that it is completely visible after invoking BESTVIEW.

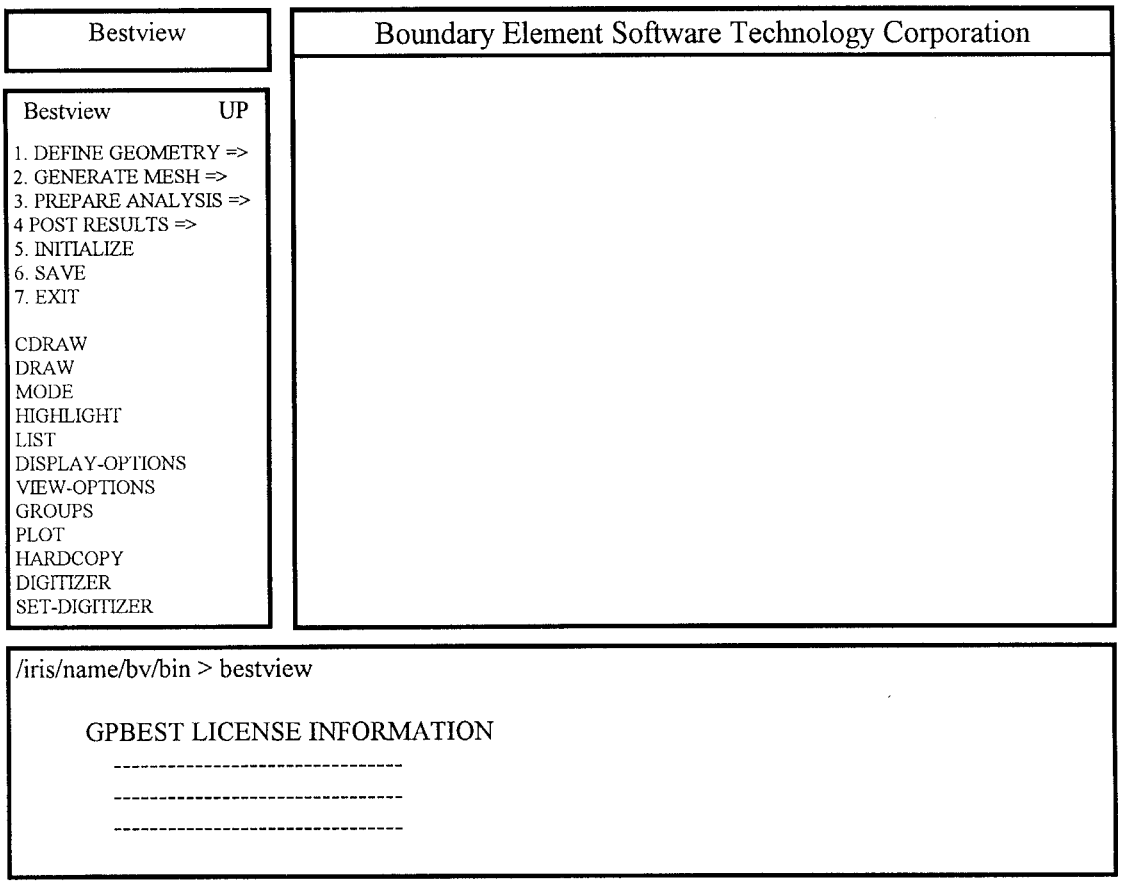

Fig. 1.5.2 The Opening Menu

In fact, you can always modify the location and size of the command window, even after invoking BESTVIEW, since the system is always working in an X-window environment.

When you look at Fig. 1.5.2, you will notice a $\Rightarrow$ at the end of certain options. This sign implies that there are submenus under the option associated with it. Also note that the first available option in the MENU window (the top-most option) has *UP* associated with it. If you select this option, the system will take you to a menu level one step higher than the one you are currently in (except in the opening menu where it is kept just to be consistent with the other menu structures). For example, if you select DEFINE GEOMETRY from the main (or opening) menu, the first option on the top would be *DEFI UP*. If you select that, you will come back to the main menu. Also note that, later on in this manual, we have asked you to set the DIGITIZER ON. This always implies that you have to select SET DIGITIZER and click on the ON button. The options, from CDRAW to SET-DIGITIZER, in Fig. 1.5.2 are the GLOBAL COMMANDS, as described in the next chapter.

We would also like to mention that, many times when you are working with the DIGITIZER ON and you have selected a certain option, BESTVIEW displays a message on the command windows

with certain characters within the first bracket. When you select that character, the implication is as follows:

Character	Implication
a	abort the current process
e	exit from recording the information
k	keyboard input, instead of clicking with the mouse
p	point detection --- you want to click a point from the display for the relevant information
n	node detection --- you want to click a node from the display

There is a subtle difference between aborting and exiting. When you click on a list of entities and press *e*, all the entities up to that point get recorded for the option you are working with. But pressing *a* instead will not record any information and the action essentially is cancelling the option you are working with.

You should be aware how models are rotated using the VIEW-OPTIONS⇒ROTATE command. First, the model is rotated a specified angle around the screen X axis. The screen X axis is horizontal and points to the right of the screen. Then the model is rotated a specified angle around the screen Y axis. The screen Y axis is vertical and points to the top of the screen. Finally, the model is rotated a specified angle around the screen Z axis. The screen Z axis is perpendicular to the plane of the screen and points toward the user. It should be noted that the rotations are not performed around the model axes which are displayed at the lower left-hand corner of the screen.

1.6 QUICK START SECTION

The remainder of this manual describes the commands and functions of BESTVIEW in great detail. However, to help the new user get up to speed as quickly as possible, this section highlights some commonly used procedures, as well as the command sequences to carry out these tasks. Once the user is able to see some basic commands and tasks, the rest of the manual can be consulted for greater detail.

To simplify the examples shown here and throughout the rest of the manual, the following screen is given which highlights where the user inputs data and commands.

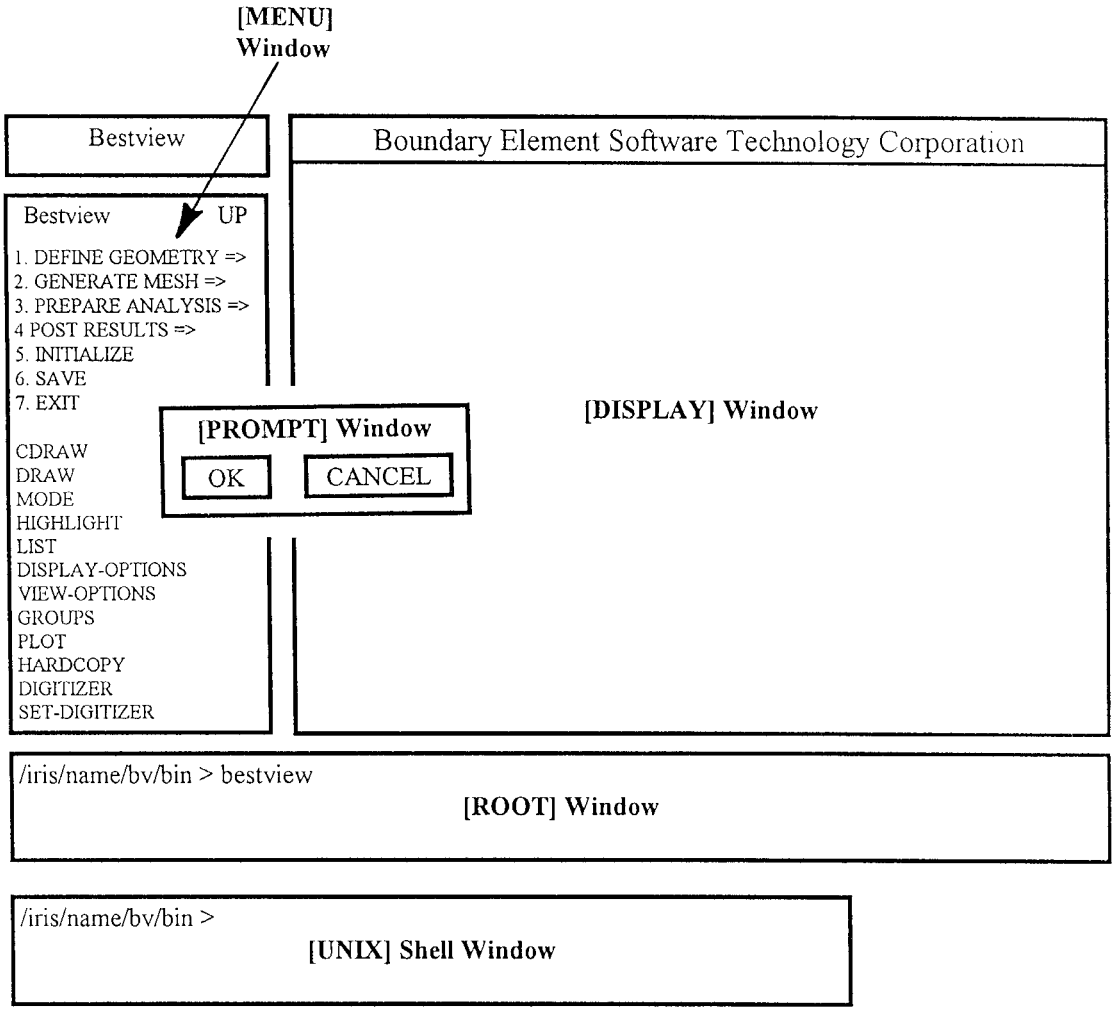

Fig. 1.6.1 Window Names in BESTVIEW

[MENU] This is the command menu. Some menu commands will result in another submenu displayed in the [MENU] area.

[PROMPT] The [PROMPT] window appears when the user must enter specific data. Sometimes the choice is a simple YES/NO response. Other times, file-names, geometrical coordinates, rotation angles, etc. must be entered.

[ROOT] This is the window that was used to start the BESTVIEW program. It is suggested that this window be placed at the bottom of the screen so that it is visible. It is used to display listings of data, to prompt the user to carry out a specific action, or to accept data input.

[UNIX] This is a UNIX shell window where UNIX commands can be executed. It is completely independent of the BESTVIEW program.

[DISPLAY] This is the main display window where the graphics, model, coordinate axes, etc. are displayed. Sometimes the user can select entities directly from this window.

NOTE: Many of the example sequences assume that BESTVIEW is in the original, default configuration. If, in the course of manipulating a model, you have changed some option settings, the sequence of commands may change. To reproduce the example command sequences shown in this manual, start with a new BESTVIEW session.

1.6.1 STARTING BESTVIEW

Assuming the BESTVIEW program has been installed correctly, the following commands will open up a new database named 'new_db'. The file need not exist before starting BESTVIEW.

INPUT FOCUS	*COMMAND/DATA ENTRY*	*COMMENTS*
[UNIX]	bestview	This starts the BESTVIEW session. You will probably want to arrange your root window to be at the bottom of the screen, as previously shown.
[PROMPT]	<ESC>new_db [OK]	The <ESC> key clears the PROMPT window. The name of the new BESTVIEW database is 'new_db'. You are now ready to execute BESTVIEW commands.

1.6.2 RUNNING GPBEST TO CREATE A NEUTRAL FILE

In order to display a model and results from a GPBEST run, a NEUTRAL file must be created by GPBEST. A NEUTRAL file is created by including the NEUT line in the **CASE section of the GPBEST data file:

```
**CASE
. . .
NEUT
```

If GPBEST runs successfully, a file NEUTRAL.OUT is created. For the purpose of this example, assume that it is renamed:

```
mv NEUTRAL.OUT brac2.NEUTRAL.OUT
```

The NEUTRAL file can contain both model geometry and results. (Results can also be read in from a results-only file. See Chapter 6 of this manual for more details.)

1.6.3 VIEWING MODEL GEOMETRY FROM A NEUTRAL FILE

This example assumes there is only one GMR in the GPBEST data file. Run GPBEST to create the NEUTRAL file, and rename it to be 'brac2.NEUTRAL.OUT'. Make sure that the file 'NEUTRAL.OUT' does not exist in the current directory. In order to view the geometry, start BESTVIEW, and then:

INPUT FOCUS	*COMMAND/DATA ENTRY*	*COMMENTS*
[MENU]	POST RESULTS	
[MENU]	READ-GPBEST-RES.	
[ROOT]	brac2.NEUTRAL.OUT	This is the NEUTRAL file from the GPBEST run.
[MENU]	POST UP	Move up one menu.
[MENU]	CDRAW	The model is displayed.

1.6.4 ROTATING A MODEL TO OBTAIN AN ISOMETRIC VIEW

Once the model geometry has been displayed, the model can be rotated around the screen $X - Y - Z$ axes.

INPUT FOCUS	*COMMAND/DATA ENTRY*	*COMMENTS*
[MENU]	VIEW-OPTIONS	
[MENU]	ROTATE	
[PROMPT]	-60,-30,-20[OK]	This rotates the model -60 degrees around the screen X axis, then -30 degrees around the screen Y axis, then -20 degrees around the screen Z axis. The new coordinates are displayed at the coordinate TRIAD. If you are satisfied with the rotation, you can proceed.
[PROMPT]	[OK]	Accept the rotation by selecting [OK] a second time.
[MENU]	CDRAW	The rotated model is displayed.

1.6.5 READ IN GPBEST RESULTS AND DISPLAY DEFORMED GEOMETRY

Again, this example is for a single-GMR model.

INPUT FOCUS	*COMMAND/DATA ENTRY*	*COMMENTS*
[MENU]	POST RESULTS⇒	
[MENU]	READ-GPBEST-RES.	
[ROOT]	brac2.NEUTRAL.OUT	This is the NEUTRAL file from the GPBEST run.
[MENU]	CDRAW	The model is displayed.
[MENU]	DEFORMED GEOMETRY	
[PROMPT]	[ON]	
[PROMPT]	<ESC> AUTOMATIC [OK]	The <ESC> key clears the [PROMPT] window. Specify AUTOMATIC scaling of DEFORMED SHAPE.
[MENU]	CDRAW	The deformed shape plot is displayed.
[PROMPT]	Y	Display both the deformed geometry and undeformed geometry.

1.6.6 DISPLAY A VON-MISES STRESS FRINGE PLOT

This example assumes that the model and results have already been read into BESTVIEW.

INPUT FOCUS	*COMMAND/DATA ENTRY*	*COMMENTS*
[MENU]	MODE	
[MENU]	FRINGE-PLOT	VON MISES is the default function.
[MENU]	CDRAW	The color fringe plot of Von Mises stress is displayed.
[MENU]	MODE	
[MENU]	WIRE-MESH	Get out of fringe plot mode.

1.6.7 SEND A PLOT OF THE MODEL GEOMETRY TO A POSTSCRIPT PRINTER

INPUT FOCUS	*COMMAND/DATA ENTRY*	*COMMENTS*
[MENU]	HARDCOPY	
[MENU]	ENCAP.-POSTSCRIPT	
[PROMPT]	[OK]	Accept the default name for the ENCAPSULATED POSTSCRIPT file, ‘bview.eps’.
[PROMPT]	<ESC> .005 [OK]	This is a good general line thickness for postscript plots.
[MENU]	CDRAW	The geometry is displayed on the screen is also sent to the postscript file. The postscript file is closed.
[UNIX]	lpr -Pps_prn bview.eps	Print the postscript file using the standard UNIX print command. Here the postscript printer device is names ‘ps_prn’.

1.6.8 QUITTING BESTVIEW

INPUT FOCUS	*COMMAND/DATA ENTRY*	*COMMENTS*
[MENU]	Click top line . . . UP	The top line of the menu returns you to the previous menu. Select the top menu line several times until you are at the opening menu.
[MENU]	EXIT	
[PROMPT]	[YES]	The database will be saved for future use. It will be named whatever name you gave it when you started the current BESTVIEW session. In these examples, it is named ‘new_db’.
[PROMPT]	[YES]	Exit BESTVIEW. The cursor returns to the ROOT window.

2.0 GLOBAL COMMANDS

2.1 INTRODUCTION

Because the GLOBAL commands are used frequently in BESTVIEW sessions, they are given special attention in this chapter. The GLOBAL commands are the options following the EXIT option in the BESTVIEW main menu. These options are not numbered.

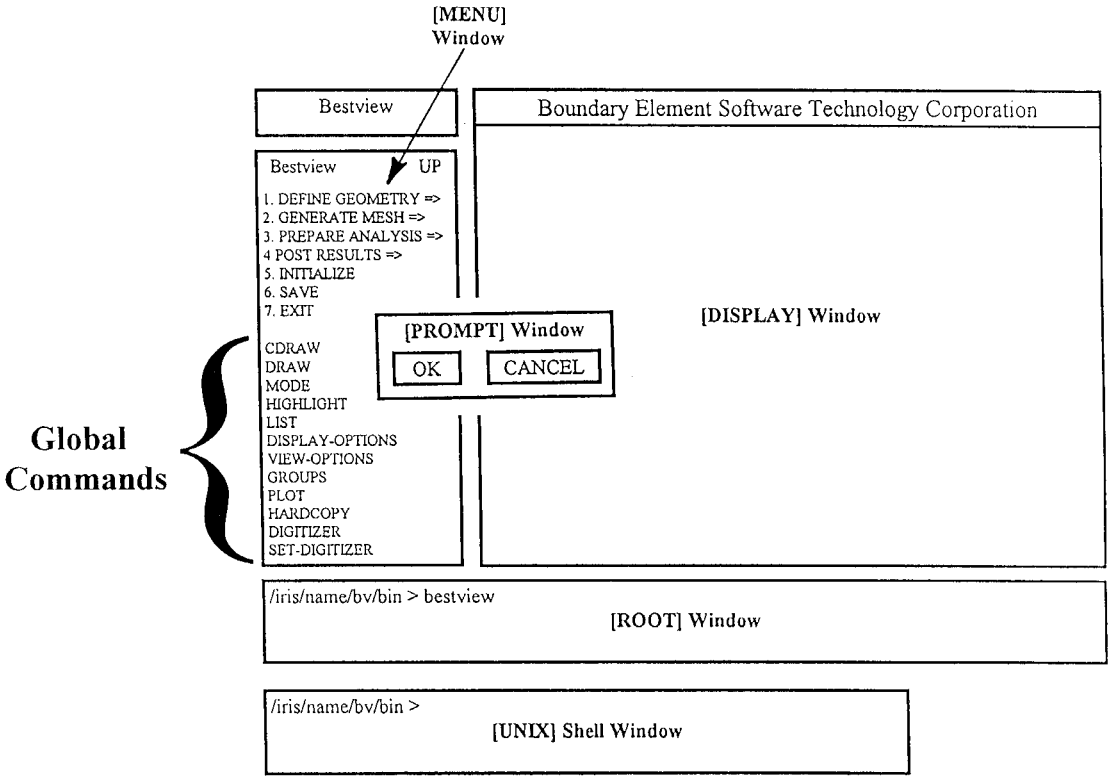

Fig. 2.1.1 BESTVIEW Windows and Global Commands

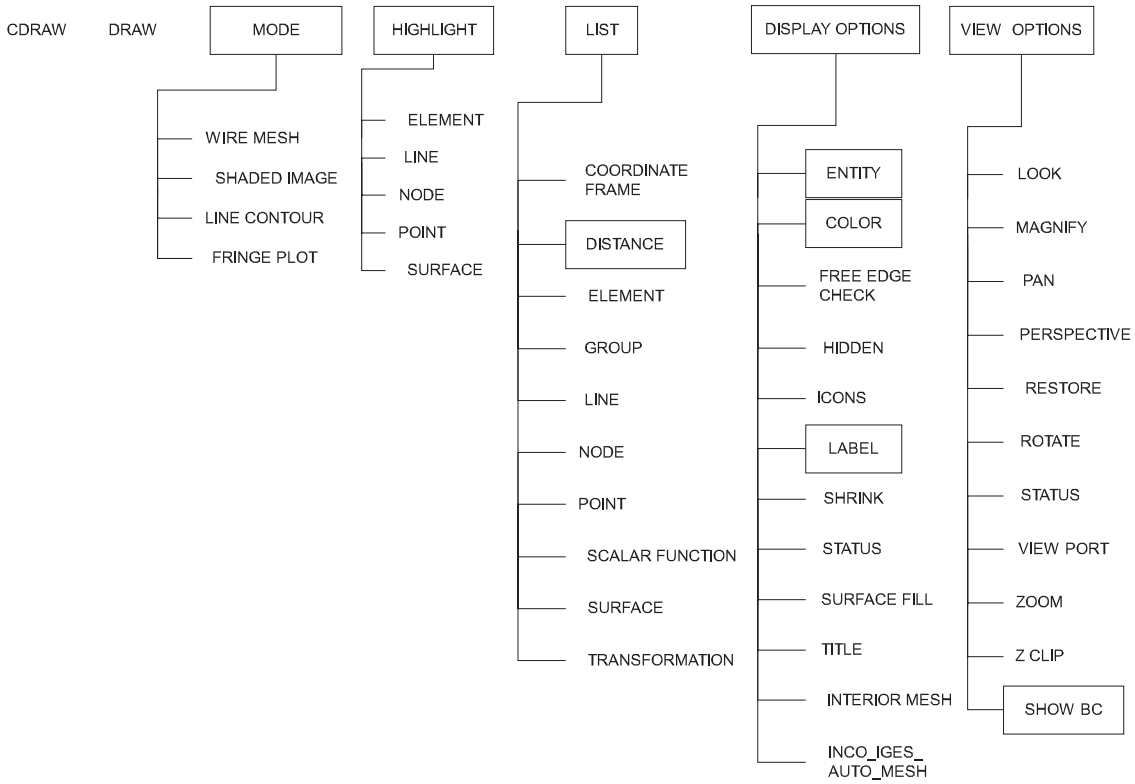

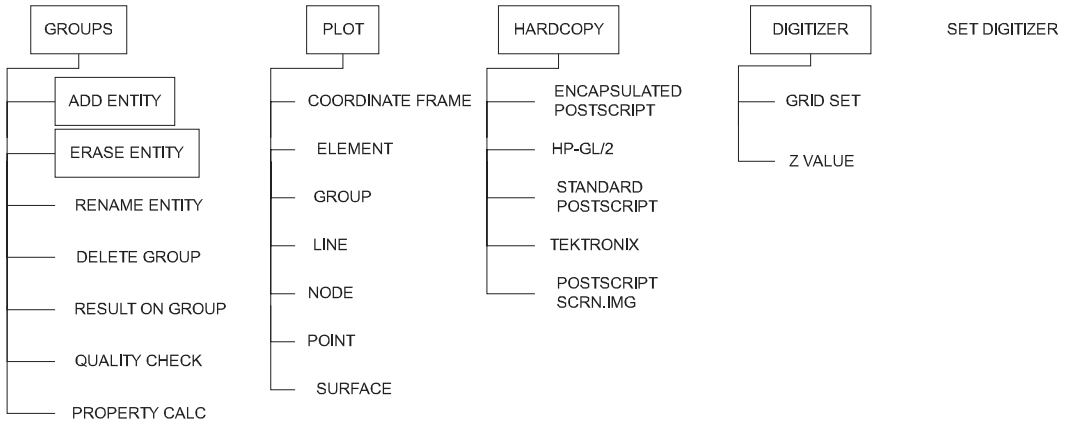

These commands include facilities to display the picture on the graphics window (CDRAW, DRAW), to control the mode of display for post processing purposes (MODE), to list and highlight specific geometric or mesh entities, to manipulate the image (DISPLAY-OPTIONS, VIEW-OPTIONS), to plot only specific entities on the screen (PLOT), to take hardcopies of the display and to give interactive input through the mouse (SET-DIGITIZER). You can access the GLOBAL commands from within any numbered option on the BESTVIEW main menu or from the main menu itself. Six of the GLOBAL commands are also available for your use from any option in BESTVIEW, either global or numbered. These are: **CDRAW, DRAW, MODE, PLOT,**

HARDCOPY and **SET-DIGITIZER**. This arrangement greatly facilitates your manipulations through the various menu options.

2.2 CDRAW

The CDRAW option performs an auto-center draw on the graphics window for any display mode. This means that the object to be displayed is centered and mapped within the current viewport or the graphics window. Hence, if you wish to see a centered mapping of the entire object at any stage in your session (pre-processing, data preparation or post processing), simply issue a CDRAW.

Depending on the mode of display, you will have to respond to one or more of these queries when you issue a CDRAW:

1) TEST IT Do you want labels (alphabets) over contour lines (<Y>es, <N>o)
2) Do you want the undeformed shape also (Y/N)
3) Give a DOT $< \cdot >$ as the first character to end input. Give string to be shown
4) Want to edit (<Y>es, <N>o)

Query 1) If you select MODE⇒LINE-CONTOUR, specify your option (Y or N) for the display of contour labels over the contour lines on the modes.

Query 2) If you set POST-RESULTS⇒DEFORMED GEOMETRY ON, you must specify your option (a single character input Y or N) for the display of the undeformed shape in dashed lines along with the deformed shape in solid lines.

Query 3,4) If you select DISPLAY-OPTIONS⇒TITLE (which is a toggle switch for the display of a title for the model) to turn the TITLE to ON, you will have to input the title string and detect its position on the graphics window. If you wish to avoid this query, select DISPLAY-OPTIONS⇒TITLE and toggle the TITLE to OFF.

NOTE: If your model seems to ‘‘disappear’’ during a BESTVIEW session, use CDRAW to bring it back into view. If issuing a CDRAW command does not restore the model, try the following:

1. DISPLAY-OPTIONS ⇒ STATUS

   This shows the various DISPLAY-OPTIONS settings. Browse the values to see if all the settings are reasonable.

2. DISPLAY-OPTIONS ⇒ SHRINK ⇒ 0.0

   If you choose a SHRINK value of 1.0, all entities will shrink down to dots and will seem to disappear. Reset SHRINK to zero to restore full-sized entities.

3. DISPLAY-OPTIONS ⇒ ENTITY ⇒ ALL ⇒ ON

   If you choose to turn all entities OFF, nothing will display. Turn everything back ON.

4. LIST ⇒ ELEMENTS
   LIST ⇒ NODES
   . . . etc.

To determine if entities actually exist in the current BESTVIEW session, LIST some entities. If nothing exists, items may have been accidentally deleted.

EXAMPLE

The following illustrates the effect of the CDRAW command. Note that the object is enlarged to fill the screen and is centered on the screen.

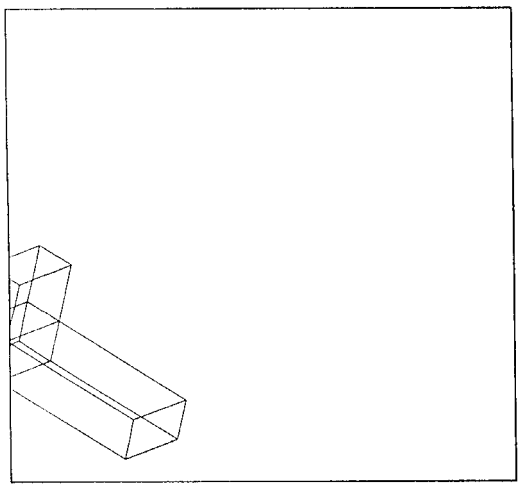

(a) Before CDRAW Command

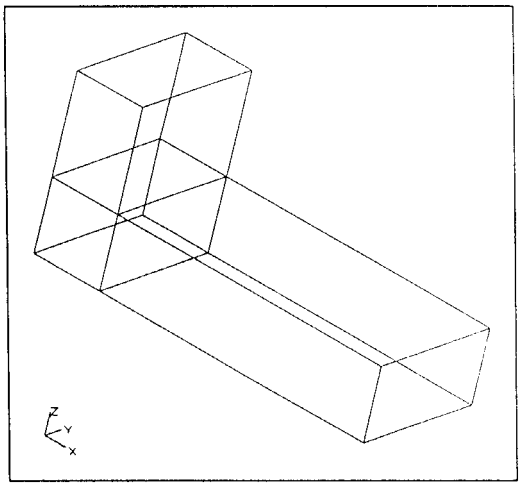

(b) After CDRAW Command

Fig. 2.2.1 The CDRAW Command

2.3 DRAW

The DRAW option is functionally similar to the CDRAW option with one important difference. The model is not centered with respect to the viewport or the graphics window when you issue a DRAW. This option is generally used when you wish to redisplay a zoomed view of a model (i.e., if you selected VIEW-OPTIONS⇒ZOOM, and then you wish to redraw the zoomed view). In such a situation, you must not issue a CDRAW.

Depending on the mode of display, you will have to respond to one of these queries when you issue a DRAW:

1) Do you want labels (alphabets) over contour lines (<Y>es, <N>o)
2) Do you want the undeformed shape also (Y/N)
3) Give a DOT $< \cdot >$ as the first character to end input. Give string to be shown
4) Want to edit (<Y>es, <N>o)

Query 1) If you select MODE⇒LINE-CONTOUR, specify your option (Y or N) for the display of contour labels over the contour lines on the models.

Query 2) If you set POST-RESULTS⇒DEFORMED GEOMETRY ON, you must specify your option (a single character input Y or N) for the display of the undeformed shape, in dashed lines along with the deformed shape in solid lines.

Query 3,4) If you select DISPLAY-OPTIONS⇒TITLE (which is a toggle switch for the display of a title for the model) to turn the TITLE to ON, you will have to input the title string and detect its position on the graphics window. If you wish to avoid this query, select DISPLAY-OPTIONS⇒TITLE and toggle the TITLE to OFF.

EXAMPLE

This example and the pictures below illustrate that the model is not rescaled to fill the screen when the DRAW command is used.

INPUT FOCUS	*COMMAND/DATA ENTRY*	*COMMENTS*
[MENU]	CDRAW	The model is scaled to fill the screen when CDRAW is used.
[MENU]	VIEW-OPTIONS	
[MENU]	MAGNIFY	
[PROMPT]	<ESC> 0.5 [OK]	Shrink the model. This is illustrated in Fig. 2.3.1(a).
[MENU]	ROTATE	Rotate the model to obtain a different view.
[PROMPT]	-60,-30,-30 [OK] [OK]	
[MENU]	DRAW	Notice that the model is still displayed with a 0.5 X magnification factor. This is illustrated in Fig. 2.3.1(b).

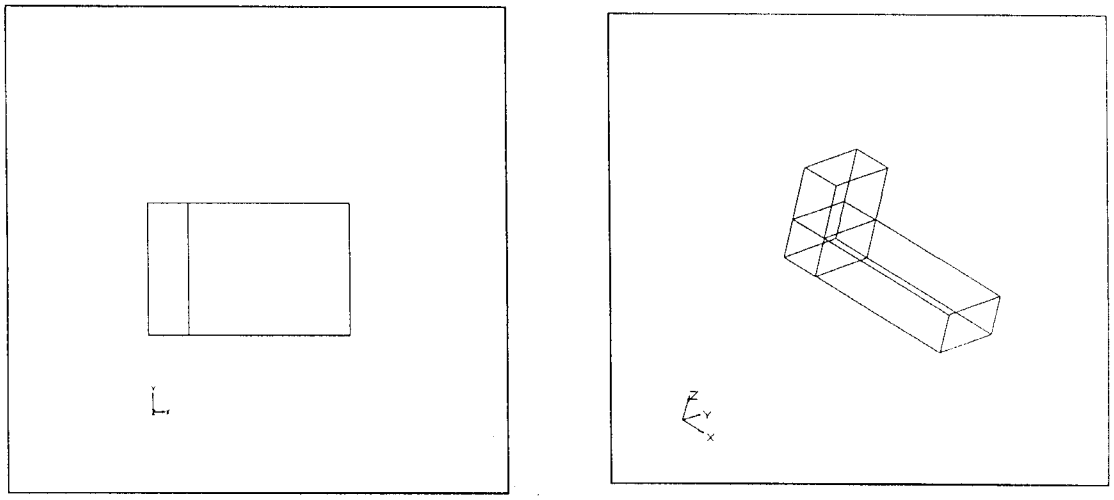

(a) MAGNIFY Command (b) DRAW Command

Fig. 2.3.1 The DRAW Command

2.4 MODE

The MODE option controls the display mode for the post processing phase. Note that any selection in the MODE menu must be followed by a CDRAW, DRAW, PAN, ZOOM or MAGNIFY command to display the model in the selected mode.

2.4.1 WIRE MESH

If you select the WIRE-MESH option, you can display a hidden line view of the model in the current configuration. Note that you must have defined elements and nodes or read in the results using POST-RESULTS⇒READ GPBEST RES. to use this option.

EXAMPLE

INPUT FOCUS	*COMMAND/DATA ENTRY*	*COMMENTS*
[MENU]	CDRAW	The result of this CDRAW is shown in Fig. 2.4.1.1(a).
[MENU]	MODE	Enter the MODE menu.
[MENU]	WIRE-MESH	Choose to display a hidden line view of the model.
[MENU]	CDRAW	The hidden line view is displayed in Fig. 2.4.1.1(b).

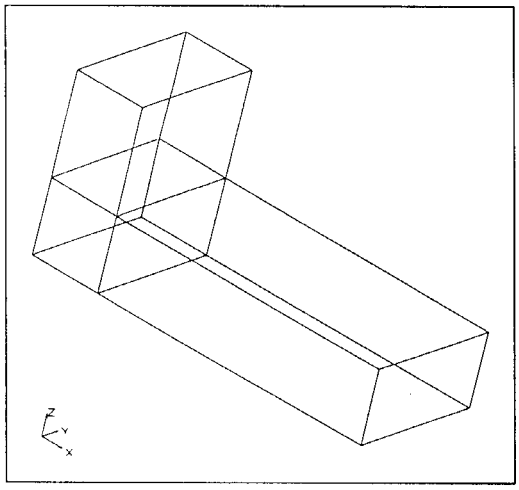

(a) Before MODE - WIRE-MESH Command

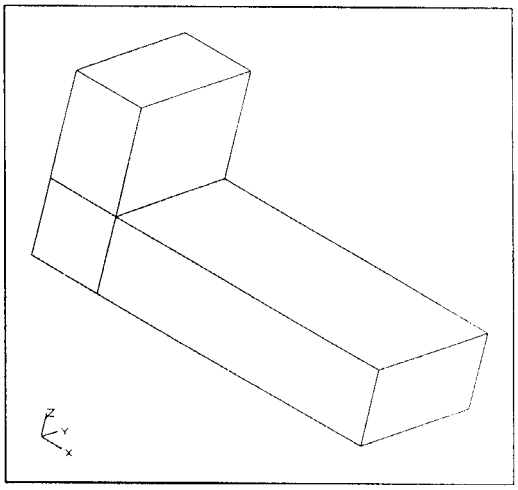

(b) After MODE - WIRE-MESH Command

Fig. 2.4.1.1 MODE - WIRE-MESH Command

2.4.2 SHADED IMAGE

The SHADED-IMAGE option sets the display to a shaded image of the model. You must have defined elements and nodes or read in results using POST RESULTS⇒READ GPBEST RES. to use this option. The SHADED-IMAGE option does not work on the geometry level (i.e., on points and surfaces). It merely fills elements with a solid color. As a side effect, it displays a hidden-line plot of the model.

2.4.3 LINE CONTOUR

The LINE-CONTOUR option sets the display to a line drawing of the model and the associated function contours. You can use this option in conjunction with the POST RESULTS⇒DEFORMED GEOMETRY option to display line contours on the deformed geometry.

When you display the model after choosing this option, you will be prompted:

> Do you want labels (alphabets) over contour lines on the model (<Y>es, <N>o)

Specify your choice for the display of the contour level labels (a single character input Y or N).

EXAMPLE

This example illustrates how to display a contour stress plot. It assumes that the model and results have already been read into BESTVIEW.

INPUT FOCUS	*COMMAND/DATA ENTRY*	*COMMENTS*
[MENU]	MODE	
[MENU]	LINE-CONTOUR	VON MISES is the default function.
[MENU]	CDRAW	
[MENU]	Y	Display character labels on the contours to identify stress levels. The contour line plot is displayed.

2.4.4 FRINGE PLOT

The FRINGE-PLOT option allows you to display a continuous color tone contour plot over the model. You can use this option in conjunction with the POST RESULTS⇒ DEFORMED GEOMETRY option to display fringe plots over the deformed geometry.

EXAMPLE

This example involves a stress fringe plot of Von Mises stress.

INPUT FOCUS	*COMMAND/DATA ENTRY*	*COMMENTS*
[MENU]	MODE	
[MENU]	FRINGE-PLOT	VON MISES is the default function.
[MENU]	CDRAW	The color fringe plot of Von Mises stress is displayed.

2.5 HIGHLIGHT

The HIGHLIGHT option allows you to highlight a single entity or a range of entities. This option could be particularly useful in the geometry definition and data preparation stages for the purpose of identifying an entity or a range of entities.

The HIGHLIGHT option is available for elements, lines, nodes, points and surfaces.

```
Enter limits (lower, upper)
(default: 1)
```

You can either specify a single entity number or a range of entity numbers (i.e., two integer quantities, the lower limit and the upper limit) to be highlighted.

At the post processing stage, after reading results through the Neutral file using the READ GPBEST RESULTS, BESTVIEW would display sequential labels for both nodes and elements of the model. However, while creating the sequential numbers for BESTVIEW's database in the READ GPBEST RESULTS operation, the system keeps a map of the model mesh numbers (the original numbers used to define the model) to the sequential numbers generated. So if you wish to identify an element or a node by its actual number reported in the GPBEST results (and also in the Neutral file), select the following:

DISPLAY OPTIONS - LABEL - MODEL MESH NUMBERS

and click ON. Then select the HIGHLIGHT option and subsequently the ELEMENT (or NODE) option and give the model entity number. The default is MODEL MESH NUMBERS - OFF.

The HIGHLIGHT command only highlights entities on the current screen. A subsequent DRAW, CDRAW, PAN, ZOOM or MAGNIFY eliminates the highlighting.

EXAMPLE

The following command sequence will highlight elements 16 through 20 and then remove the highlighting. The actual element numbers are used, not the resequenced numbers.

INPUT FOCUS	*COMMAND/DATA ENTRY*	*COMMENTS*
[MENU]	DISPLAY-OPTIONS	Start this sequence by turning on the actual node and element numbers. Do not use the resequenced, internal numbers.
[MENU]	LABEL	
[MENU]	MODEL MESH NUMBERS	
[PROMPT]	[YES]	
[MENU]	GLOB.DISP.LABE UP	Move up one menu.
[MENU]	GLOB.DISP UP	Move up one menu.
[MENU]	HIGHLIGHT	
[MENU]	ELEMENT	
[PROMPT]	<ESC> 16,20 [OK]	The <ESC> key clears the [PROMPT] window. Elements 16-20 are highlighted.
[MENU]	CDRAW	Special highlighting is removed. All elements are now displayed with the same color.

2.6 LIST

The LIST option allows you to examine a single entity or a range of entities, along with all associated entities, by listing the range of entities on the root window. For instance, if you select LIST⇒POINT and specify a range of points to be listed, you get a listing of the point IDs, the associated transformation ID and the spatial coordinates: If you select LIST⇒LINE, you can find out the line type, the parametric coefficients (if it is a parametric line) or the associated point IDs.

Each of the listings given by the LIST command are displayed in the [ROOT] window. Hence, when you are done viewing the listing, you must hit the <ENTER> key, or <CR> key in the [ROOT] window to return control to the BESTVIEW program.

2.6.1 COORDINATE FRAME

The COORDINATE FRAME option lists a range of coordinate frames. The frame ID and the associated 4×4 transformation matrix coefficients are written out to the root window.

Enter limits (lower, upper, step)

Specify the lower limit, the upper limit and the desired increment (you need not specify the step if it is unity) to get a string of the coordinate frames.

2.6.2 DISTANCES

The DISTANCES option lists the world coordinates of two nodes (or points) and the spatial distance between them. A common modeling error is to switch between English and metric units of measurement, especially when importing data from another person or another CAD system. Using the LIST ⇒ DISTANCES commands can be very helpful in this regard.

2.6.2.1 NODES

The NODES sub-option lists the world coordinates and the spatial distance between the nodes.

```
Enter two node numbers
```

The listing is in the following format:

```
Node number   World Coordinates
                 x      y      z
     1          1.61   2.62   3.61
     2          3.22   4.21   3.33
  Distance      1.61   1.59   0.28
Total distance in space: 2.2800
```

EXAMPLE

The complete command sequence for the above example is given here. The object is to get a listing for the first two nodes of the current model.

INPUT FOCUS	*COMMAND/DATA ENTRY*	*COMMENTS*
[MENU]	SET-DIGITIZER	
[PROMPT]	[OFF]	
[MENU]	LIST	
[MENU]	DISTANCES	
[MENU]	NODES	
[PROMPT]	1,2 [OK]	Specify that you want a listing for the first two nodes
[ROOT]		The listing of the locations and distances of the first two nodes is displayed in the [ROOT] window.
[ROOT]	<CR>	You must hit the <CR> key in the [ROOT] window to return control to BESTVIEW.

2.6.2.2 POINTS

The POINTS sub-option lists the world coordinates and the spatial distance between two points.

```
Enter two point numbers
```

The listing is in the following format:

```
Point number     World coordinates
                   x      y      z
      1          1.61   2.62   3.61
      2          3.22   4.21   3.33
   Distance      1.61   1.59   0.28
 Total distance in space: 2.2800
```

2.6.3 ELEMENT

The ELEMENT option lists the element ID, the corresponding geometric and material property IDs and the associated nodal connectivity.

```
Enter limits (lower, upper)
```

A typical listing is shown below:

Element No.	Geom. Type	Mate No.	No.	Connectivity 1	2	3	4	5	6	7	8	9	10
1	PQUA	1	1	32	51	57	59	61	68	72	74		
2	PTRI	1	1	62	63	75	79	82	84				

BESTVIEW currently supports three element types, PQUA, PTRI and PTRU. For further details, refer to Chapter 4 of this manual.

EXAMPLE

The complete command sequence for the above example is given here. The object is to get a listing for the first two elements of the current model.

INPUT FOCUS	*COMMAND/DATA ENTRY*	*COMMENTS*
[MENU]	LIST	
[MENU]	ELEMENT	
[PROMPT]	<ESC> 1,2, [OK]	The <ESC> key clears the prompt window. Specify that you want a listing for the first two elements.
[ROOT]		The listing for the first two elements is displayed in the [ROOT] window.
[ROOT]	<CR>	You must hit the <CR> key in the [ROOT] window to return control to BESTVIEW.

2.6.4 GROUP

The GROUP option lists the group and the associated elements, lines, points, nodes and surfaces. It is particularly useful when working with the GROUPS global command. From the point of view of analysis through GPBEST, a group physically defines a GMR (Geometric Modeling Region).

Once you select the GROUP option, the names of the existing groups and the number of various entities in them are displayed on the [ROOT] window.

```
Group Names   Element   Lines   Nodes   Point   Surface
    g01           2       0       8       0       0
Return to continue ≥
Enter group name
```

Specify the group name at this point. This produces the listing below:

```
Nodes      35  36  37  43  47  51  57  59
Elements   33
```

This gives all the entity numbers associated with the specified group.

EXAMPLE

To get a listing of the group names in the current model and then get a listing of the nodes and elements in group *g01*:

INPUT FOCUS	*COMMAND/DATA ENTRY*	*COMMENTS*
[MENU]	LIST	
[MENU]	GROUP	
[ROOT]	<CR>	A listing of the group names is displayed in the [ROOT] window. Hit <CR> to enter desired GROUP name.
[PROMPT]	g01 [OK]	The <ESC> key clears the prompt window. Specify that you want a listing for the group named *g01*.
[ROOT]		The nodes and elements belonging to the group named *g01* are displayed in the [ROOT] window.
[ROOT]	<CR>	You must hit the <CR> key in the [ROOT] window to return control to BESTVIEW.

2.6.5 LINE

The LINE option lists the line ID, the line type and the associated points or simple lines (in case of a complex line). A typical listing for an arc and complex line is shown below.

```
Enter limits (lower, upper)
(default: 1)
```

```
                          Point Number
Line Number    Type    1     2     3     4
     1          arc    20    32    33
Return to continue ≫

Complex Line
  Number          Simple Line Numbers
     7            23    27    31    35    49    62
Return to Continue ≫
```

2.6.6 NODE

The NODE option lists the node number, the associated transformation matrix number and the spatial coordinates. A typical listing is shown below.

Node Number	Transformation Matrix	Coordinates 1	2	3	Constant
1	0	1.1	0.1	0	0.00
2	0	2.3	0.15	0	0.00
3	0	3.2	0.2	0	0.00

EXAMPLE

The complete command sequence for the above example is given here. It is desired to get a listing for the first three node numbers of the current model.

INPUT FOCUS	*COMMAND/DATA ENTRY*	*COMMENTS*
[MENU]	LIST	
[MENU]	NODE	
[PROMPT]	<ESC> 1,3 [OK]	The <ESC> key clears the prompt window. Specify that you want a listing for the first three nodes.
[ROOT]		The listing for the first three nodes is displayed in the [ROOT] window.
[ROOT]	<CR>	You must hit the <CR> key in the [ROOT] window to return control to BESTVIEW.

2.6.7 POINT

The POINT option lists the local and world spatial coordinates for the point or the range of points.

Node	Local Coordinates			World Coordinates		
Number	1	2	3	1	2	3
1	0.0	1.0	3.0	0.0	1.0	3.0
2	0.0	2.0	3.0	0.0	3.0	3.0

2.6.8 SCALAR FUNCTION

The SCALAR FUNCTION option is to be used at the post processing stage. The current function is defined in POST RESULTS ⇒ CONTOURS ⇒ FUNCTION-TYPE, which is extracted from the database and the maximum and minimum values are listed, along with the function value at the specified nodes.

Scalar Function Displace X Step = 1 Layer = 0 Increment = 1.00

Component Max = 0.000 Component min = -0.7736

Node	Value
1	-0.11
2	-0.772

EXAMPLE

This example takes you through a series of tasks involving the function chosen for post-processing. First, the current scalar function is determined. (At this point the function could be modified). Then, the values of the function for the first two nodes are listed.

INPUT FOCUS	*COMMAND/DATA ENTRY*	*COMMENTS*
[MENU]	POST-RESULTS	First, determine the current function type and component.
[MENU]	CONTOURS	
[MENU]	FUNCTION-TYPE	
[ROOT]		Available function types are displayed in the [ROOT] window.
[PROMPT]		Current post-processing scalar function type is displayed in the [PROMPT] window. The default TYPE is STRESS.
[PROMPT]	[OK]	Accept STRESS for the function.
[ROOT]		Available STRESS components are displayed in the [ROOT] window.
[PROMPT]		Current component of STRESS is displayed in the [PROMPT] window. The default component is VON MISES.
[PROMPT]	[OK]	Accept VON MISES for the component.
[MENU]	LIST	
[MENU]	SCALAR-FUNCTION	
[PROMPT]	<ESC> 1,2 [OK]	Request a listing of the scalar function for the first two nodes.
[ROOT]		Listing of VON MISES STRESS values for nodes 1 and 2 appears in the [ROOT] window.
[ROOT]	<CR>	You must hit the <CR> key in the [ROOT] window to return control to BESTVIEW.

2.6.9 SURFACE

The SURFACE option lists the surface ID and the associated line IDs. In accordance with the terminology used, a surface is equivalent to a patch. It is important to note that a surface is internally stored as a four-edged patch even if you use the THREE-EDGES option. One of these edges would be of zero length. Refer to the discussion on THREE-EDGES in Chapter 3 for more details.

Surface Number	Line Numbers
1	2 3 5 7

2.6.10 TRANSFORMATION

The transformation option lists the transformation matrix ID and the 4×4 matrix of coefficients associated with it.

Transformation Number	Transformation Matrix
	1 2 3 4

This is to be used only when you have defined more than one coordinate frame in the geometric definition.

This option can be used to check the various rotations performed in a session by examining the coefficients which form the direction cosine matrix.

2.7 DISPLAY OPTIONS

DISPLAY-OPTIONS allow you to control the display of various entities and their corresponding labels, the colors of the various entities, free edge checks, and hidden line display of the mesh and the display of titles for the model.

2.7.1 ENTITY

The ENTITY option allows you to control the display of the various entities on the graphics window/viewport. Basically, entities are toggled ON and OFF using these commands.

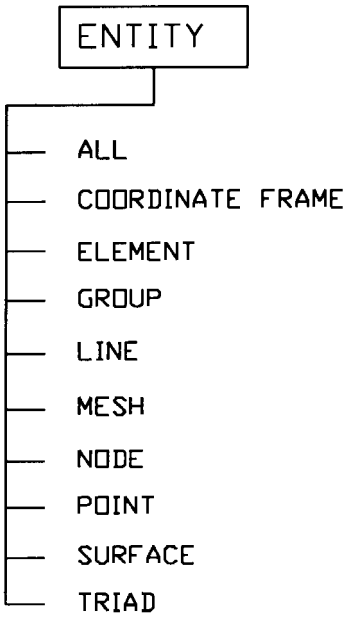

2.7.1.1 ALL

The ALL option allows you to turn the display of all the entities ON or OFF.

The TRIAD is not affected by this option.

```
Enter ON or OFF
(default: OFF)
```

Be careful if you turn all the entities OFF. A subsequent CDRAW will reveal a blank screen if all entities are OFF. However, this is a useful option when you wish to display only one type of entity. In this case, turn all entities OFF; then turn the desired entity ON.

2.7.1.2 COORDINATE FRAME

This option turns the display of all the coordinate frames ON or OFF. Note that the default for the display of coordinate frames is OFF, but the default for the triad (on the lower left corner of the graphics window) is ON.

Enter ON or OFF
(default: OFF)

2.7.1.3 ELEMENT

The ELEMENT option turns the display of elements ON or OFF.

EXAMPLE

If you wish to display only the elements on the screen, first turn all entities OFF, then turn the ELEMENT entities ON.

INPUT FOCUS	*COMMAND/DATA ENTRY*	*COMMENTS*
[MENU]	DISPLAY-OPTIONS	
[MENU]	ENTITY	
[MENU]	ALL	
[PROMPT]	[OFF]	This turns all entities OFF.
[MENU]	ELEMENT	
[PROMPT]	[ON]	This turns all elements ON. However, they do not display until you select the CDRAW command.
[MENU]	CDRAW	You must select CDRAW, DRAW, etc., in order to display the elements. Only the elements appear in the [DISPLAY] window.

2.7.1.4 GROUP

The GROUP option turns the color display of groups ON or OFF. Setting this ON displays the respective groups (with associated entities) in the group color.

Since GROUPS in BESTVIEW corresponds to GMRs in GPBEST, it is useful to plot the various GROUPS in different colors to distinguish them.

EXAMPLE

If you would like to display the various GROUPS in different colors:

INPUT FOCUS	*COMMAND/DATA ENTRY*	*COMMENTS*
[MENU]	DISPLAY-OPTIONS	
[MENU]	ENTITY	
[MENU]	GROUP	
[PROMPT]	[ON]	This turns the coloring of GROUPS ON. However, they do not display until you select the CDRAW command.
[MENU]	CDRAW	You must select CDRAW, DRAW, etc., in order to display the groups.

2.7.1.5 LINE

The LINE option turns the display of lines ON or OFF.

2.7.1.6 MESH

This option allows you to turn the display of elements and nodes ON or OFF. The same result could be achieved by individually selecting the ELEMENT and NODE options.

2.7.1.7 NODE

This option turns the display of nodes ON or OFF.

2.7.1.8 POINT

This option turns the display of points ON or OFF.

2.7.1.9 SURFACE

The SURFACE option turns the display of surfaces ON or OFF.

2.7.1.10 TRIAD

The TRIAD is the axis displayed on the lower left corner of the BESTVIEW graphics window/viewport. The default display flag for the triad is ON. The display of the triad can be set ON or OFF through this option.

2.7.2 COLOR

The COLOR option allows you to set standard or RGB color values to the various entities. All available standard colors are displayed on the [ROOT] window.

WHITE	BLACK	RED	GREEN	BLUE
MAGENTA	CYAN	YELLOW	ORANGE	PINK
OLIVE	PURPLE	LIGHT-GREY	DARK-GREY	BROWN
CUSTOM-RGB				

Simply enter your color choice in the [PROMPT] window. You can specify the color by typing the first two or three characters of the strings displayed above, provided those characters uniquely define the color, i.e., to select CYAN, simply specify CY, but to select BLACK, specify BLA and not BL because BL does not give a unique selection ($BLUE$ is the other possibility).

Selection of CUSTOM-RGB allows you to specify the RGB value of the color of a specific entity. In this case, you must enter three real numbers which indicate the amount of Red, Green and Blue, respectively. The real numbers must be between zero and one, zero indicating no color contribution, one indicating full color contribution. The prompt for these inputs is given by:

```
Enter desired color
Enter RED, GREEN or BLUE intensities (0. - 1.)
```

Specific colors can be applied to various graphical entities:

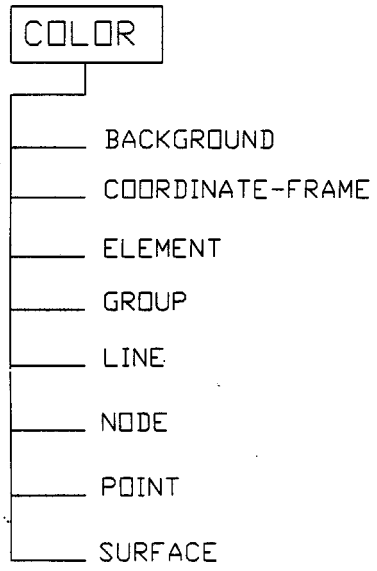

After assigning new colors to certain entities, you must issue a CDRAW, DRAW, PAN, ZOOM or MAGNIFY to activate the new colors.

EXAMPLE

Display the nodes in RED.

INPUT FOCUS	*COMMAND/DATA ENTRY*	*COMMENTS*
[MENU]	DISPLAY-OPTIONS	
[MENU]	COLOR	
[MENU]	NODE	
[ROOT]		The available colors are listed in the [ROOT] window.
[PROMPT]	<ESC> RED [OK]	Specify RED for the node color.
[MENU]	ENTITY	
[MENU]	NODE	
[PROMPT]	[ON]	Must make sure NODES are ON so they can be displayed.
[MENU]	GLOB.DISP.ENTI UP	Move up one menu.
[MENU]	HIDDEN	
[PROMPT]	[OFF]	All of the nodes do not appear in a hidden-line plot. Turning the hidden-line option OFF allows all the nodes to be seen.
[MENU]	CDRAW	You must select CDRAW, DRAW, etc., in order for the nodes to appear red.

EXAMPLE

Display the quadrilateral elements in YELLOW. Note that this color only appears on the outside edges of the quadrilateral elements. In plots involving the MODE ⇒ SHADED-IMAGE option, the interior color for the elements is not affected by the COLOR command. However, the edge color is affected by the COLOR command.

INPUT FOCUS	*COMMAND/DATA ENTRY*	*COMMENTS*
[MENU]	DISPLAY-OPTIONS	
[MENU]	COLOR	
[MENU]	ELEMENT	
[ROOT]		The available element types are displayed in the [ROOT] window.
[PROMPT]	QUAD [OK]	Only change the color of quadrilateral elements.
[ROOT]		The available colors are listed in the [ROOT] window.
[PROMPT]	<ESC> YELLOW [OK]	Specify YELLOW for the quadrilateral color
[MENU]	CDRAW	You must select CDRAW, DRAW, etc., in order for the quadrilateral elements to appear yellow.

EXAMPLE

Change the color for the GROUP named ‘‘STEEL’’ to CYAN:

[MENU]	DISPLAY-OPTIONS	
[MENU]	COLOR	
[MENU]	GROUP	
[PROMPT]	STEEL [OK]	Name of the group.
[PROMPT]	<ESC> CYAN [OK]	The available colors are listed in the [ROOT] window.
[MENU]	ENTITY	Still in DISPLAY-OPTIONS menu.
[MENU]	GROUP	
[PROMPT]	[ON]	
[MENU]	CDRAW	GROUP named ‘‘STEEL’’ is displayed in CYAN color.

EXAMPLE

Change the background color for the [DISPLAY] window to be light blue. This involves specifying a CUSTOM-RGB color scheme.

INPUT FOCUS	*COMMAND/DATA ENTRY*	*COMMENTS*
[MENU]	DISPLAY-OPTIONS	
[MENU]	COLOR	
[MENU]	BACKGROUND	
[ROOT]		The available colors are listed in the [ROOT] window.
[PROMPT]	<ESC> CUSTOM-RGB [OK]	Specify a custom color, since 'light blue' is not a basic color that is available.
[PROMPT]	.7,.8,.9 [OK]	Red = 7; Green = 8; Blue = 9.
[MENU]	CDRAW	You must select CDRAW, DRAW, etc., in order for the background to appear light blue.

2.7.3 FREE EDGE CHECK

The FREE-EDGE-CHECK option checks for any free element edges on the entire model and displays them. This option is available only for meshed models (i.e., you cannot perform a free edge check on surfaces). The FREE-EDGE-CHECK option does not display any element that shares an edge with another.

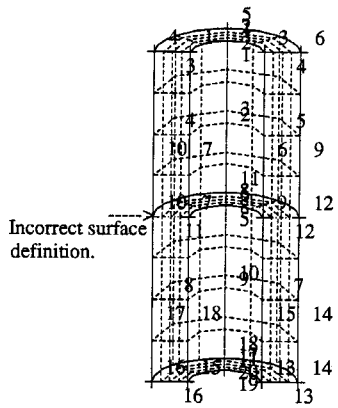

Model Geometry (Single GMR)

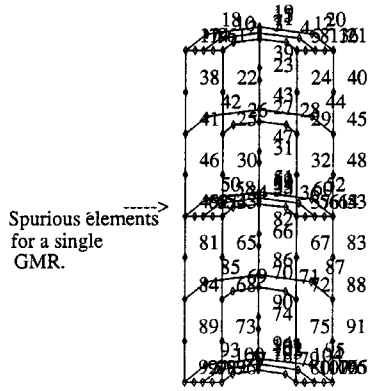

Meshed Model

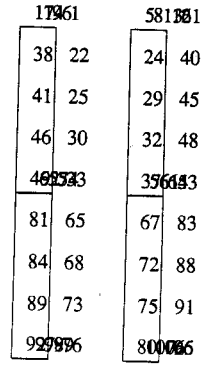

Free Edge Check reveals spurious edges.

Fig. 2.7.3.1 Utility of the FREE EDGE CHECK Option

2.7.4 HIDDEN

The HIDDEN option allows you to display a hidden line view of the meshed model. Note that this option is not available at the geometry level (i.e., you cannot display hidden line views of surfaces).

```
Enter ON or OFF
(default: OFF)
```

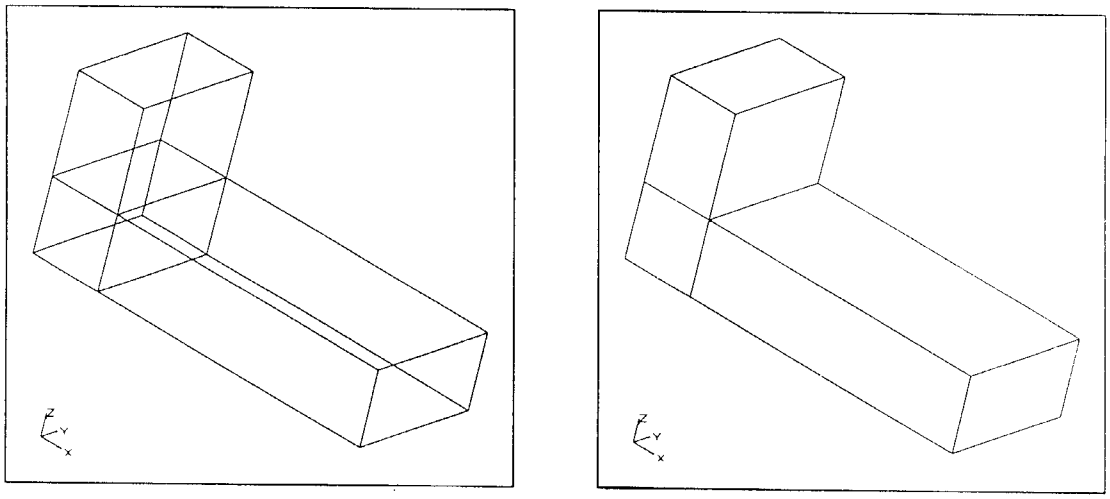

(a) View of Model with HIDDEN OFF (b) View of Model with HIDDEN ON

Fig. 2.7.4.1 Hidden Line View of Meshed Model

2.7.5 ICONS

The ICONS option allows you to turn the display of icons at the center of gravity of entities (lines, surfaces, elements) ON or OFF. This option is particularly useful when you are selecting entities through the digitizer. Clicking with the mouse on the icon ensures selection of the entity easily. Hence, we recommend that you turn ICONS ON before you proceed to select entities to be operated on. In the PREPARE-ANALYSIS section, when you have to identify specific elements for specifying the boundary conditions, icons are automatically turned ON for your convenience.

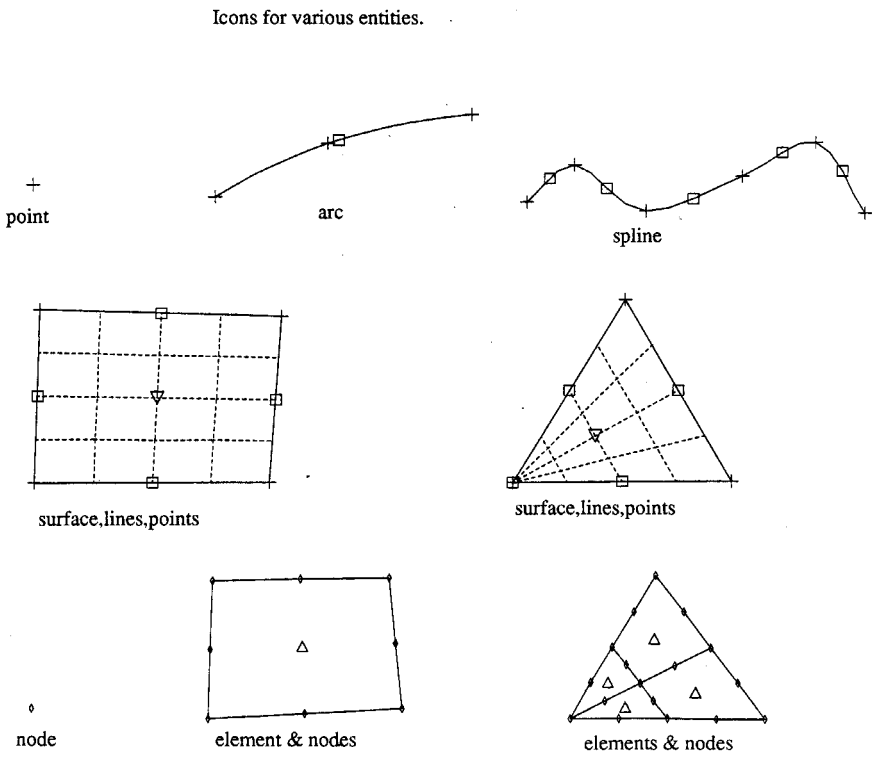

Fig. 2.7.5.1 ICONS for Geometric and Mesh Entities

2.7.6 LABEL

The LABEL option controls the display of labels for all the entities. This is a convenient way to determine element numbers, get node numbers for element connectivity, etc. Various entity labels are routinely toggled ON and OFF in a typical BESTVIEW session.

It should be noted that entity labels will not be displayed for entities that have been turned OFF using the DISPLAY-OPTIONS ⇒ ENTITY options. If the labels do not appear, make sure that the entities themselves ar turned ON using DISPLAY-OPTIONS ⇒ ENTITY.

Labels can be toggled ON and OFF for the following entities.

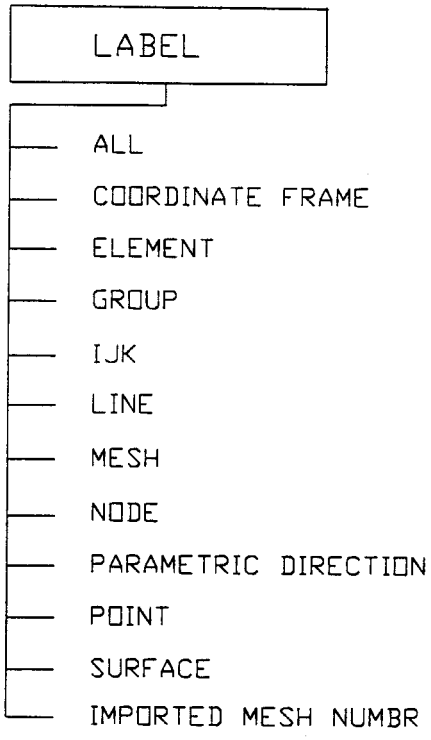

2.7.6.1 ALL

The ALL sub-option turns the labels of all entities ON or OFF.

This is useful when you want to display labels for only one kind of entity. First, turn all labels OFF using DISPLAY-OPTIONS ⇒ LABEL ⇒ ALL ⇒ OFF, then turn the specific entity label ON.

2.7.6.2 COORDINATE FRAME

This option turns the display of coordinate frame labels ON or OFF.

2.7.6.3 ELEMENT

The ELEMENT option turns the display of element labels ON or OFF.

EXAMPLE

Display only the element numbers labels. Use the actual element numbers, not the resequenced, internal numbers. First turn all lables OFF, then turn element labels ON.

INPUT FOCUS	*COMMAND/DATA ENTRY*	*COMMENTS*
[MENU]	DISPLAY-OPTIONS	Start this sequence by turning on the actual node and element numbers. Do not use the resequenced, internal numbers.
[MENU]	LABEL	
[MENU]	MODEL MESH NUMBERS	
[PROMPT]	[YES]	
[MENU]	ALL	
[PROMPT]	[OFF]	First, turn all entity labels OFF.
[MENU]	ELEMENT	Still in the DISPLAY-OPTIONS ⇒ LABEL sub-option of the [MENU] window.
[PROMPT]	[ON]	Now turn all element labels ON.
[MENU]	CDRAW	The element numbers are displayed at the centroid of the elements.

2.7.6.4 GROUP

This option turns the display of group labels ON or OFF.

EXAMPLE

Turn the GROUP labels ON.

INPUT FOCUS	*COMMAND/DATA ENTRY*	*COMMENTS*
[MENU]	DISPLAY-OPTIONS	
[MENU]	ENTITY	
[MENU]	GROUP	
[PROMPT]	[ON]	Turn GROUP entities ON.
[MENU]	GLOB.DISP.ENTI UP	Move up one menu.
[MENU]	LABEL	
[MENU]	GROUP	
[PROMPT]	[ON]	
[MENU]	CDRAW	The GROUP labels are displayed at the centroids of the groups.

2.7.6.5 IJK

The IJK option provides for the display of labels for the local coordinate directions for surface and elements. This is particularly useful in identifying the parametric edges for a surface or an element.

2.7.6.6 LINE

The LINE option turns the line labels ON or OFF.

2.7.6.7 MESH

The MESH option turns the labels of elements and nodes simultaneously ON or OFF. The same result can be achieved by using the ELEMENT and NODE options individually.

2.7.6.8 NODE

The NODE option turns the node labels ON or OFF.

EXAMPLE

Display the node number labels. To ensure that these are displayed, the node labels and the node entities are both turned ON.

INPUT FOCUS	*COMMAND/DATA ENTRY*	*COMMENTS*
[MENU]	DISPLAY-OPTIONS	Start this sequence by turning on the actual node and element numbers. Do not use the resequenced, internal numbers.
[MENU]	LABEL	
[MENU]	MODEL MESH NUMBERS	
[PROMPT]	[YES]	
[MENU]	GLOB.DISP.LABE UP	Move up one menu.
[MENU]	ENTITY	
[MENU]	NODE	
[PROMPT]	[ON]	First, turn the node entity display ON. By default, the nodes are not always displayed.
[MENU]	GLOB.DISP.ENTI UP	Move up one menu.
[MENU]	LABEL	
[MENU]	NODE	
[PROMPT]	[ON]	Turn the node number labels ON.
[MENU]	CDRAW	The node numbers are displayed.

2.7.6.9 PARAMETRIC DIR

The PARAMETRIC DIR option displays a label which marks the *parametric end* (i.e., $t = 1$ of a line). This option is very useful when performing operations on three-edged surfaces. For further details, refer to the discussion in Chapter 4 on meshing surfaces to create elements and nodes.

2.7.6.10 POINT

This option turns the display of point labels ON or OFF.

2.7.6.11 SURFACE

The SURFACE option turns the display of surface labels ON or OFF.

2.7.6.12 MODEL MESH NUMBERS

This option turns the model mesh numbers ON or OFF. This is available only after reading results of a successful GPBEST run through the Neutral file using the READ GPBEST RESULTS option. Whatever the node and element (cumulatively termed ‘‘mesh’’) numbers are in the Neutral file, BESTVIEW automatically uses an internal, sequential numbering scheme when it loads the information during a READ GPBEST RESULTS process. However, it is sometimes necessary to identify a mesh entity with respect to its actual number in the Neutral (or GPBEST result) file. You can turn the IMPORTED MESH NUMBER - ON and then use the LABEL or HIGHLIGHT option for this purpose. Note that this option is OFF by default (i.e., you will see sequential numbers of the mesh entities).

2.7.7 SHRINK

The SHRINK option specifies a factor by which the elements are collapsed toward their centroid. Allowable values of the shrink factor are between zero and one. Thus, a shrink factor of zero does not collapse the elements toward their centroids, while a shrink factor of one collapses the model to a dot at the centroid. Users are cautioned against using a shrink factor of one, since this may result in a blank screen after executing a DRAW, CDRAW, etc.

```
Enter shrink factor
(default: 0.000)
```

Specify the shrink factor, a real number between zero and one.

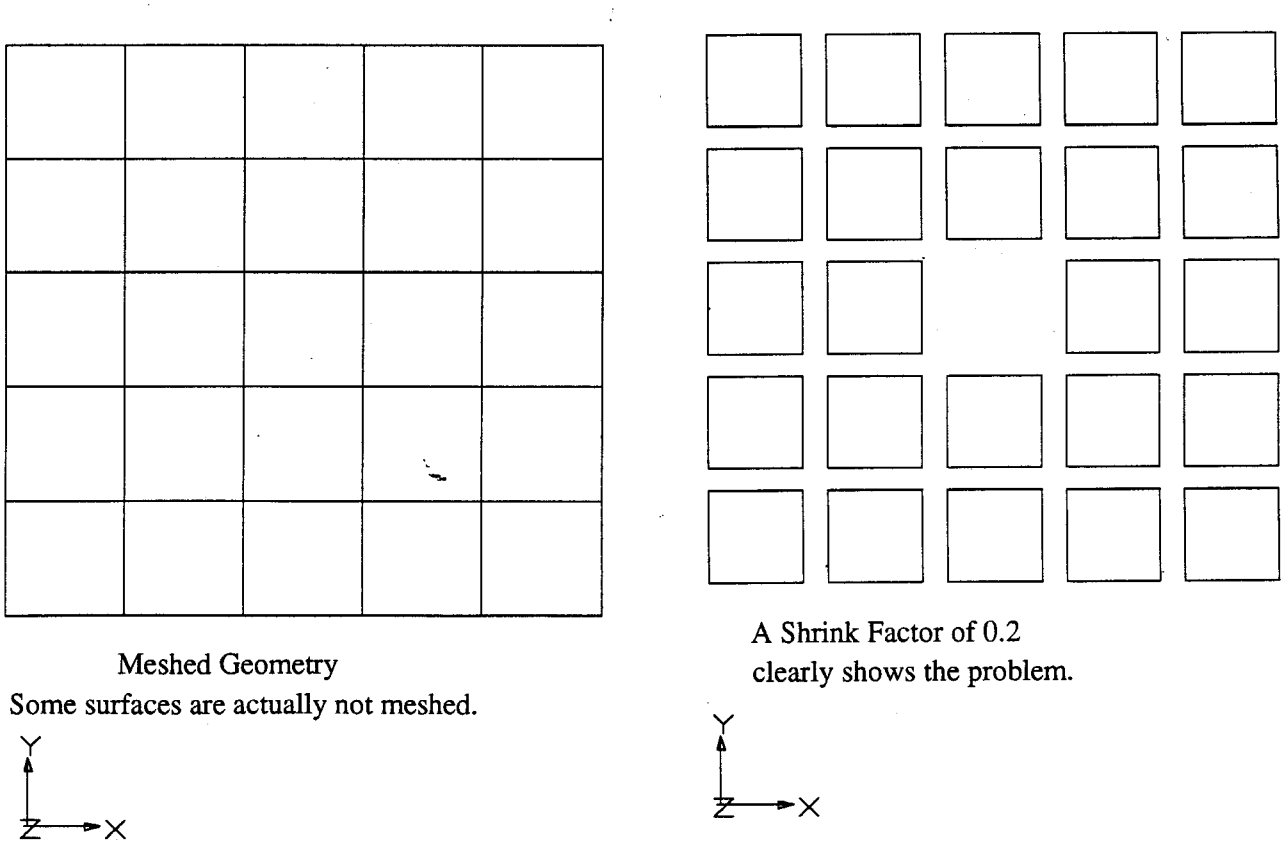

Fig. 2.7.7.1 Utility of the SHRINK Option

2.7.8 STATUS

The STATUS option lists the settings of all the current DISPLAY options parameters.

```
Hidden                  - OFF
Icons                   - OFF
Display Mode            - LINE
Shrink Factor           - 0.000
Interior Surface Lines  - 4
```

This information is displayed on the [ROOT] window for your reference.

This option is useful if you are having difficulty obtaining the desired display. List the status of each DISPLAY-OPTION, as shown above, and adjust them accordingly through the appropriate DISPLAY-OPTIONS commands.

2.7.9 SURFACE FILL

The SURFACE-FILL option displays a cross-hatched pattern of lines within a surface. The lines are also parallel to the respective parametric directions of the surface. Wrong surface definitions are easily detected by giving a surface fill pattern for the surfaces.

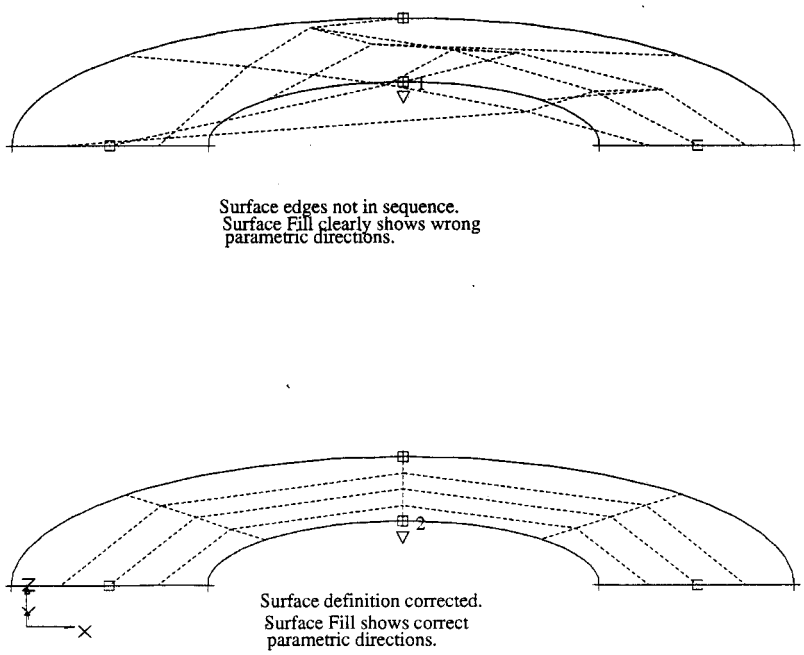

Fig. 2.7.9.1 Utility of the SURFACE-FILL Option

2.7.10 TITLE

The TITLE option allows you to display titles at various positions on the graphics window/viewport. You must note that this option is a toggle switch for the title display. Thus, if the title entity is not set, you can turn it ON and vice versa. The current status of the title flag is displayed on the [ROOT] window.

```
This is a toggle switch ...
Turning title ON ...
or
This is a toggle switch ...
Turning a title OFF ...
```

It should be noted that this command is simply a toggle to turn the title option ON and OFF. If you turn it ON, you are prompted to enter the title text and specify its position when you execute a CDRAW, DRAW, PAN, ZOOM or MAGNIFY. When this happens, the following instructions appear:

```
1. Give a dot <.> as the first character to end input. Give the string
   to be shown:
2. Want to edit (<Y>es, <N>o)
```

Specify all the titles and detect the starting positions on the graphics window/viewport. If you finally wish to edit any of the declared strings, specify Y to the second prompt.

If you choose to modify (edit) an existing title, the previous string number which is displayed on the graphics screen is erased and the modified string is displayed in its place at a different position if you choose. An example of changing a title from ‘‘Time’’ to ‘‘Time (sec)’’ is given here:

```
    The strings declared are:
Number        String
   1          Displacement
   2          Time
 a) Identify string number to be changed: 2
    The string was:
    Time:
Enter the modified string. Time (sec)
Detect starting position on screen
```

Note that all these operations can be performed while making a HARDCOPY. Only the modified, final strings are sent to the POSTSCRIPT file.

You may find it tedious to be prompted to enter in a title every time you do a CDRAW, DRAW, etc. For this reason, it is usually best to keep the title option OFF until you make your final plot. Then turn it ON.

EXAMPLE

This illustrates how a title is entered and placed on the screen.

INPUT FOCUS	*COMMAND/DATA ENTRY*	*COMMENTS*
[MENU]	DISPLAY-OPTIONS	
[MENU]	TITLE	
[ROOT]		The following message appears in the [ROOT] window: ‘‘This is a toggle switch. Turning TITLE ON.’’
[MENU]	CDRAW	
[ROOT]	This is a geometry plot <CR>	The [ROOT]window prompts you to enter the text for the title. Next, the [ROOT] window prompts you to select a point on the [DISPLAY] window where you want the title to appear.
[DISPLAY]	(Click a point on the screen with the mouse.)	The title appears in the [DISPLAY] window at the point you click.
[ROOT]	. (A period)	The [ROOT] window prompts you to enter a period to quit the TITLE entry.
[ROOT]	N	The [ROOT] window asks ‘‘Want to to edit? (<Y>es, <N>o).’’
[MENU]	TITLE	After you have displayed the plot with the title, you may want to turn the TITLE option OFF. This toggles the TITLE option OFF.

2.7.11 INTERNAL MESH

When a 2D problem is analyzed using GPBEST, a CONTOUR card may be used in the **CASE section in the data file. This card enables GPBEST to create an interior mesh of each 2D GMR based on the elements defined over the boundary of each GMR. The main purpose is to visualize the variation of different parameters such as displacements, strains and stresses within the domain of each GMR. However, in the post-processing session, it is sometimes necessary to visualize the fringe or contour plots without showing the interior mesh. The DISPLAY-OPTIONS - INTERNAL MESH option serves this purpose.

If the DISPLAY-OPTIONS - INTERNAL MESH option is selected without reading the results from a valid neutral file, or if this option is used after reading a neutral file containing the results of a 3D analysis, the system will say:

> Sorry! This option is only valid for 2D post-processing.

After a 2D neutral file result is brought inside BESTVIEW, the READ GPBEST RESULTS option will report:

Reading in the results . . .
Putting results in database . . .
Forming edges for 2D . . .
Done . . .

This will indicate that this option can be used while using the FRINGE PLOT or LINE CONTOUR mode.

If the MODE is neither FRINGE PLOT nor LINE CONTOUR, and a 2D neutral file has been read in, then selection of this option will result in the following message:

> Sorry! This option works only with LINE CONTOUR or FRINGE PLOT.

If a 2D neutral file has been read in and the system is in the FRINGE PLOT (or LINE CONTOUR) mode, selecting the current option would turn the mesh off if it was on, or turn it on if it was off. The boundary of each GMR is shown as defined in the GPBEST data file. The following figures illustrate the utility of the current option:

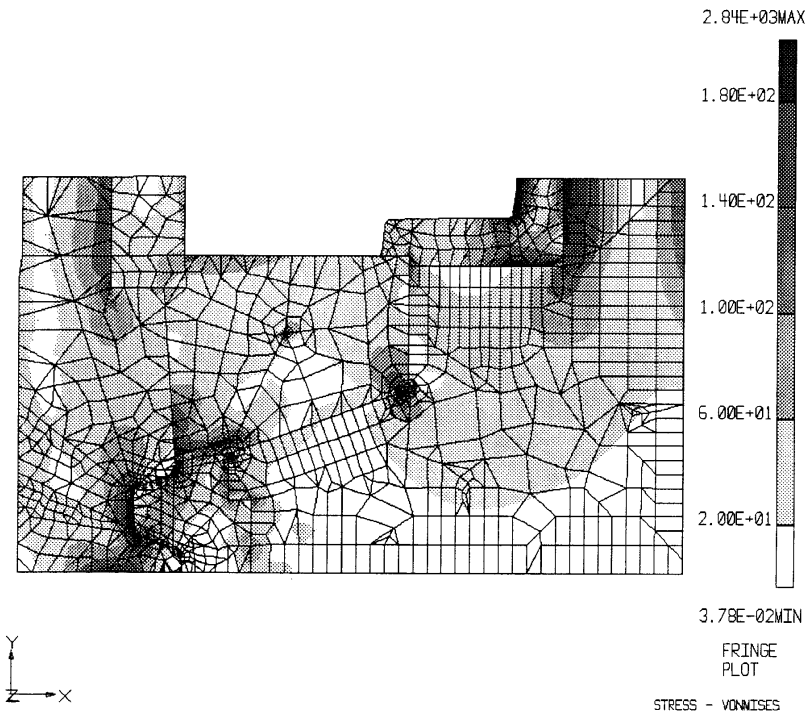
2.84E+03MAX
1.80E+02
1.40E+02
1.00E+02
6.00E+01
2.00E+01
3.78E-02MIN
FRINGE
PLOT
STRESS - VONMISES
Y
Z
X

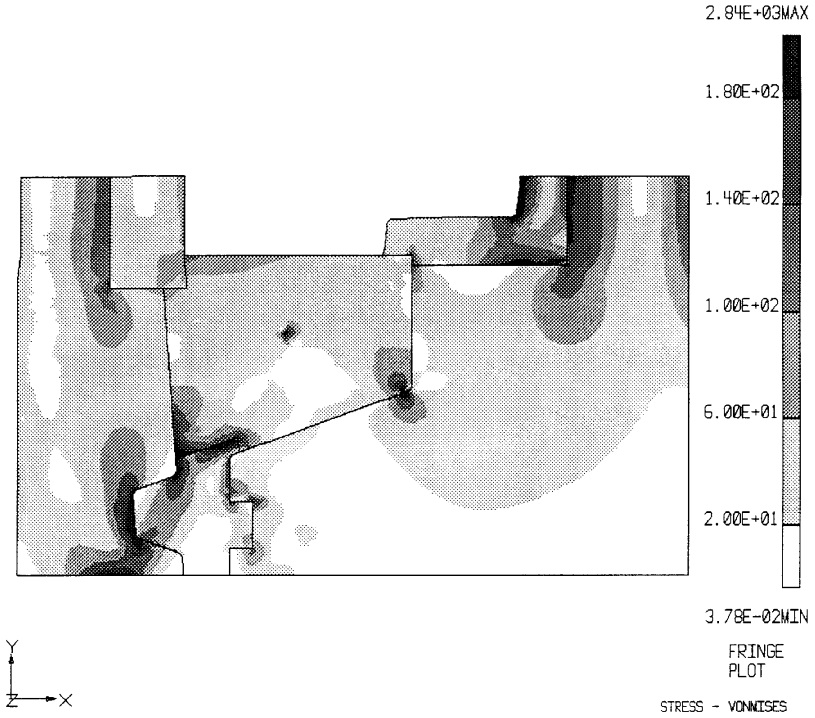
2.84E+03MAX
1.80E+02
1.40E+02
1.00E+02
6.00E+01
2.00E+01
3.78E-02MIN
FRINGE
PLOT
STRESS - VONMISES
Y
Z
X

2.7.12 INCO IGES AUTO MESH

This option is activated only when there is an incompatible mesh produced by the automesh algorithm while using the ‘‘AUTOMESH IGES’’ option in the ‘‘DEFINE GEOMETRY’’ menu of BESTVIEW. Choosing this option would highlight the incompatible elements in the model. This helps in identifying areas which need to be remeshed to produce a compatible mesh in the overall problem definition.

It is to be noted that the information regarding any incompatible elements is created while working on the ‘‘AUTOMESH IGES’’ utility and the information is lost when ‘‘INITIALIZE’’ is invoked or when you exit BESTVIEW.

2.8 VIEW OPTIONS

VIEW-OPTIONS include a variety of features to view and manipulate the model. Some of these include facilities to input the eye point, pan the image on the screen, zoom in to specific areas, rotate the active coordinate frame, magnify the image and perform a perspective projection.

2.8.1 LOOK

The LOOK option allows you to input the eye coordinate for viewing the model. The coordinate axes are then appropriately transformed, to produce the desired view. The LOOK option must be followed by a CDRAW to view the transformed configuration.

The LOOK option is available for the geometry and post-processing. Thus, LOOK can work in conjunction with DEFORMED-GEOMETRY, MODE ⇒ LINE-CONTOUR and MODE ⇒ FRINGE-PLOT.

Enter LOOK at position (x, y, z)
(default: 0)

Enter LOOK from position (x, y, z)
(default: 0)

Specify the *look at* and *look from* coordinates and issue a CDRAW to view the transformed configuration.

An alternative to this option is the VIEW-OPTIONS ⇒ ROTATE command.

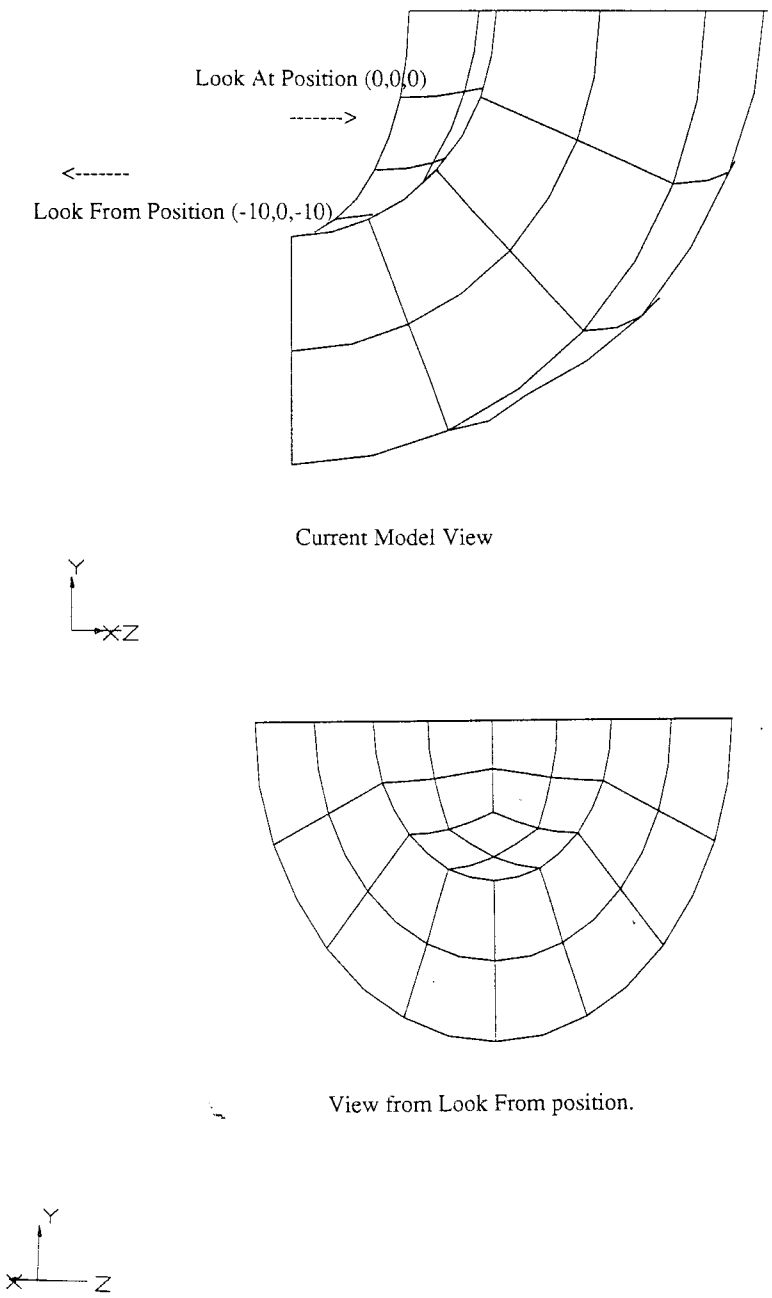

Fig. 2.8.1.1 Demonstration of the LOOK Option

2.8.2 MAGNIFY

The MAGNIFY option allows you to scale your model to an appropriate factor (any real quantity).

Depending on the mode of display, you will have to respond to one of these queries when you issue a MAGNIFY:

1. Do you want labels (alphabets) ON the contour lines over the model (<Y>es/<N>o)
2. Do you want the undeformed shape also (Y/N)
3. Give a dot $< \cdot >$ as the first character to end input. Give string to be shown:
4. Want to edit (<Y>es/<N>o)

Query 1) If you select MODE $\Rightarrow$ LINE-CONTOUR, specify your choice for the display and labels over the contour lines.

Query 2) If you set POST-RESULTS $\Rightarrow$ DEFORMED GEOMETRY ON, specify your option (single character input, Y or N) for the display of the undeformed shape in dashed lines with the deformed shape in solid lines.

Query 3,4) If you select DISPLAY-OPTIONS $\Rightarrow$ TITLE to turn the title to ON, input the title string and detect its position on the graphics window. For further details, refer to the TITLE option earlier in this chapter.

A magnification factor of one will not change the display. If you should happen to specify a magnification factor of zero or a very large value, the model may ‘‘disappear.’’ Use CDRAW to bring it back into view.

The VIEW-OPTIONS $\Rightarrow$ MAGNIFY command operates on the geometry that is currently displayed. Successively using a magnification factor of .5 will shrink the model down to a dot on the screen.

The following figures illustrate the effect of doubling the magnification factor:

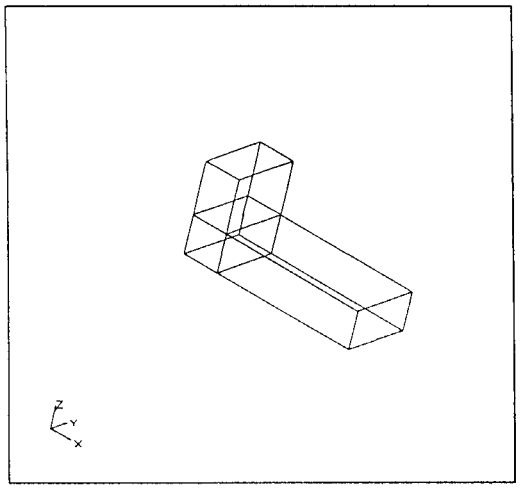

(a) Original Display

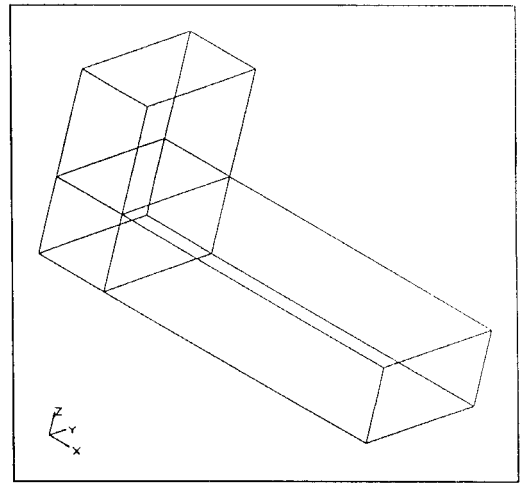

(b) Magnification Factor 2.0

Fig. 2.8.2.1 The MAGNIFY Option

2.8.3 PAN

The PAN option allows you to move your position relative to the model. You must have an approximate estimate of the model dimensions to correctly pan the model. Excessive *panning* could cause the model to be *panned* out of the screen.

Depending on the mode of display, you will have to respond to one or more of these queries when you issue a PAN:

1. Enter PAN amounts (x, y)
2. Do you want labels (alphabets) on the contour lines over the model (<Y>es, <N>o)
3. Do you want the undeformed shape also (Y/N)
4. give a dot $< \cdot >$ as the first character to end input. give string to be shown:
5. Want to edit (<Y>es/<N>o)

Query 1) Specify the pan amounts (x, y) for the relative movement. The values specified here are in model, or world coordinates. For example, if you have a beam model that is 10 units long in the X-direction, in order to move the model over half a screen, you must specify an X-PAN amount of 5. Refer to the figure below.

Query 2) If you select MODE ⇒ LINE-CONTOUR, specify your choice (a single character input, Y or N) for the display of labels over the contour lines.

Query 3) If you set POST RESULTS ⇒ DEFORMED GEOMETRY ON, specify whether the undeformed shape is to be displayed along with the deformed.

Query 4,5) For further details, refer to the TITLE option earlier on in this chapter.

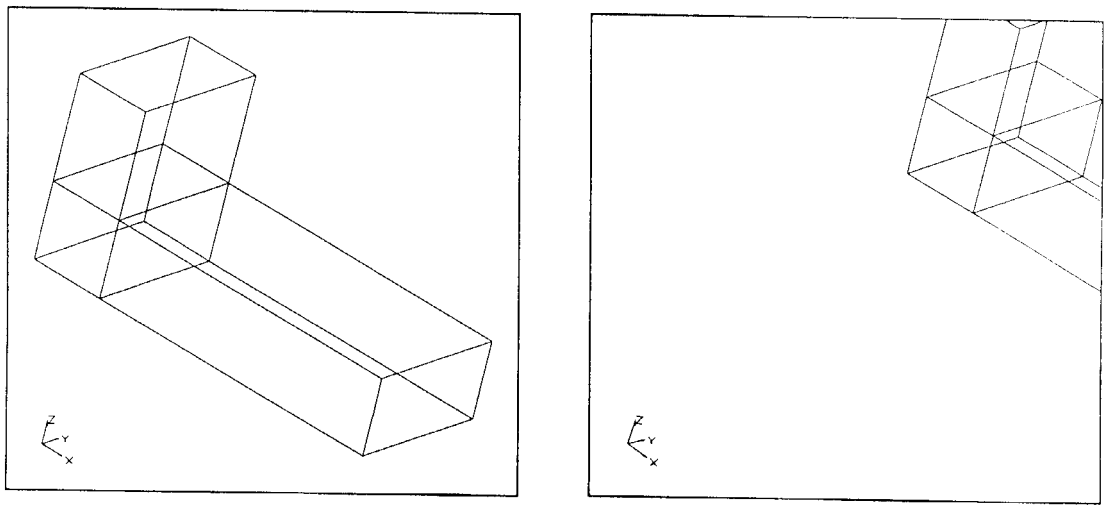

(a) Original Display (b) PANned Model (X=5,Y=2)

Fig. 2.8.3.1 The PAN Option

(Bracket is 10 units long in the X-Direction)

2.8.4 PERSPECTIVE

The PERSPECTIVE option, when set ON, causes the image to be drawn perspective. This option is useful for visualization of the model geometry.

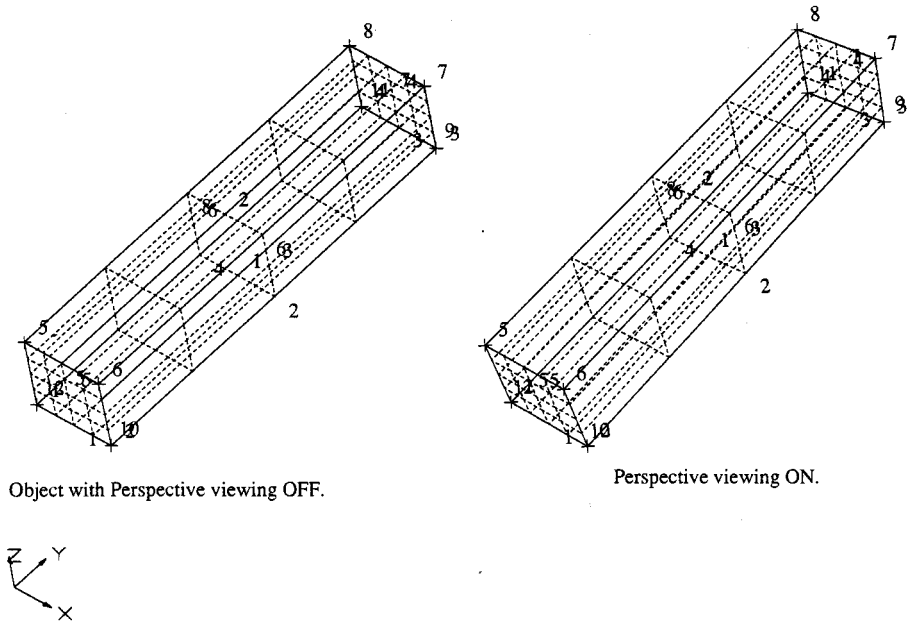

Fig. 2.8.4.1 The PERSPECTIVE Projection

2.8.5 RESTORE

The RESTORE option deletes all the coordinate transformations. In other words, the rotation and translation transformations are *restored* to an identity matrix.

The RESTORE option is invaluable while viewing a model from various angles. Once you are done with viewing the model in one view, it is easier to RESTORE the transformation and proceed to another viewing angle.

The RESTORE option must be followed by a CDRAW or a DRAW to display the restored configuration.

2.8.6 ROTATE

The ROTATE option rotates the entire object about the screen $x - y - z$ frame. The rotations are applied in the order x, y and z. The new direction of the active coordinate frame is tentatively displayed near the triad, at the lower left corner of the graphics window. If you confirm that you are satisfied with the rotation, the subsequent DRAW or CDRAW will reflect the rotation, else the rotation. On the other hand, if you cancel the rotation, the model remains unchanged.

1. Enter the rotation angle (x, y, z) (# to exit), (OK to accept)
2. Enter the rotation angle (x, y, z) (# to exit), (OK to accept)

1. Specify the rotation (three real quantities) and check the tentative new axes (displayed in a light color) near the triad.

2. If you are satisfied with the rotation, select <OK> to confirm the rotation. Otherwise, select <CANCEL> to abort the rotation.

NOTE: If the viewing angles become too complicated, use VIEW-OPTIONS ⇒ RESTORE to reset the angles to the original view. Then proceed to rotate the model using VIEW-OPTIONS ⇒ ROTATE.

Several points should be made regarding the ROTATE option. First, the rotations are always performed around the (*screen axes*). The screen axes are shown in the following figure. The screen Z axis is perpendicular to the screen and points at the user.

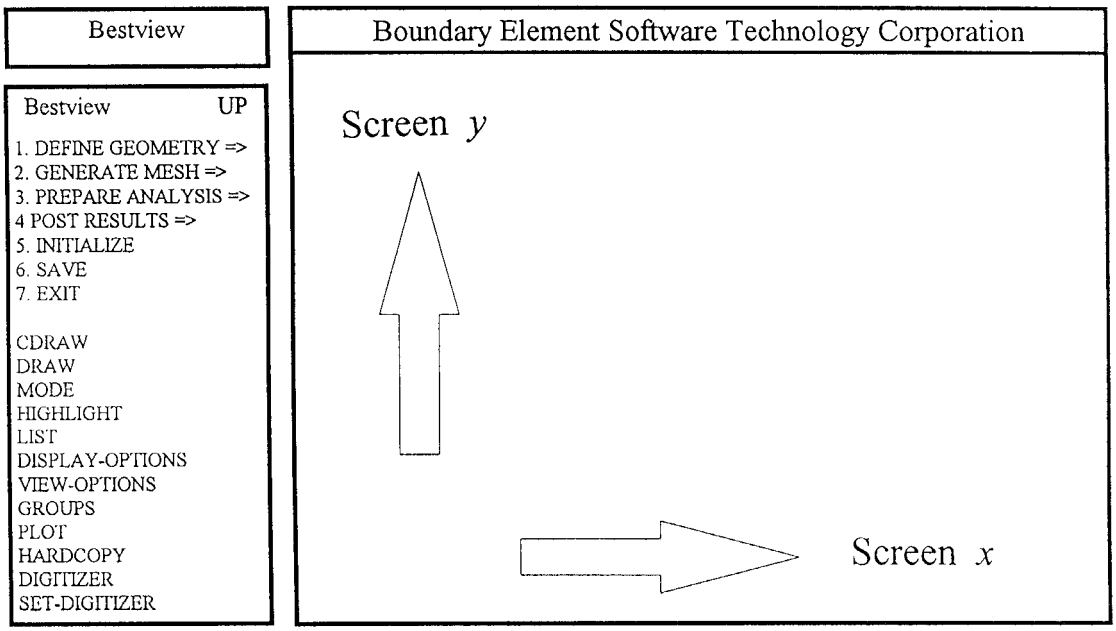

Fig. 2.8.6.1 Screen Coordinates

Another important aspect is that rotations are always *incremental*. Rotations are always performed with respect to the current viewing angles. To perform rotations about the original axes, use VIEW-OPTIONS ⇒ RESTORE, then perform the rotation.

Rotations are performed in the order x, y, z. Thus, a rotation of (10,-30,25) will rotate the model 10 degrees around the screen x axis, then it will rotate it -30 degrees around the screen y axis, and finally it will rotate it 25 degrees around the screen z axis.

EXAMPLE

This example shows the effect of incrementing the angle of rotation several times. The three views are displayed in the following figures.

INPUT FOCUS	*COMMAND/DATA ENTRY*	*COMMENTS*
[MENU]	CDRAW	Display the original geometry.
[MENU]	VIEW-OPTIONS	
[MENU]	ROTATE	
[PROMPT]	0,0,30 [OK] [OK]	This rotates the model 30 degrees around the screen z axis. Select [OK] twice.
[MENU]	CDRAW	The rotated model is displayed. Total rotation is 30 degrees.
[MENU]	ROTATE	
[PROMPT]	0,0,30 [OK] [OK]	This rotates the model another 30 degrees around the screen z axis, for a total of 60 degrees. Select [OK] twice.
[MENU]	CDRAW	The rotated model is displayed. Total rotation is 60 degrees.

(a) $z = 0$

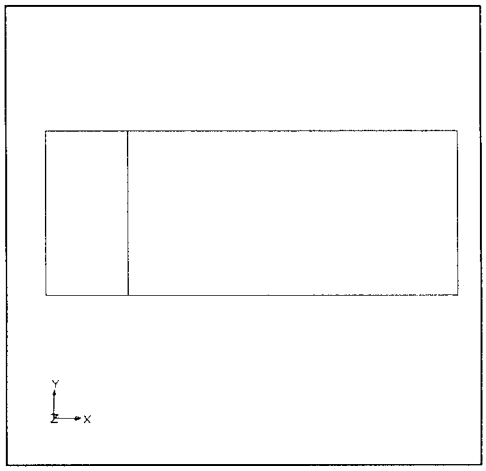

(b) $z = 30$

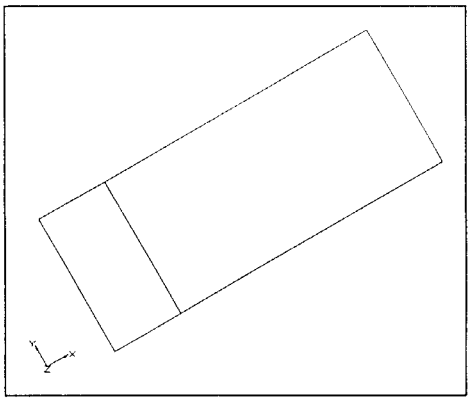

(c) $z = 60$

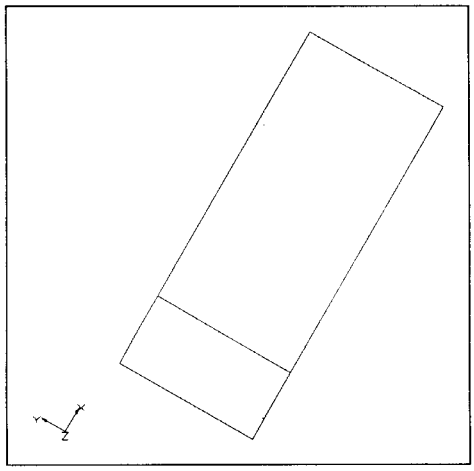

Fig. 2.8.6.2 Rotation About z-Axis

EXAMPLE

This example shows how to rotate a model on the screen to obtain an isometric view.

INPUT FOCUS	*COMMAND/DATA ENTRY*	*COMMENTS*
[MENU]	VIEW-OPTIONS	
[MENU]	ROTATE	
[PROMPT]	-60,-30,-30 [OK]	This rotates the model -60 degrees around the screen x axis, then -30 degrees around the screen y axis, then -20 degrees around the screen z axis. The new coordinates are displayed at the coordinate TRIAD. If you are satisfied with the rotation, you can proceed.
[PROMPT]	[OK]	Accept the rotation by selection [OK] a second time.
[MENU]	CDRAW	The rotated model is displayed.

EXAMPLE

These figures show some common rotation angles:

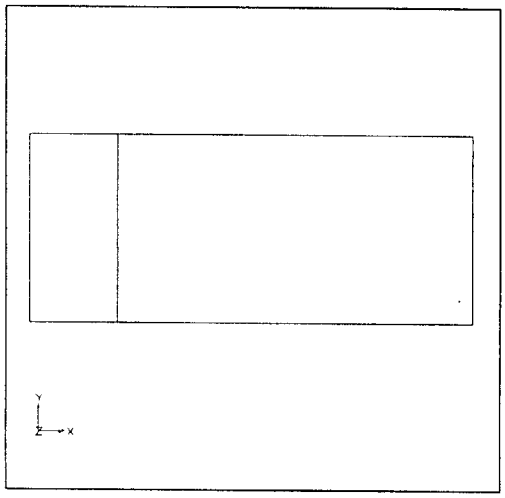

(a) Top View (X=0, Y=0, Z=0)

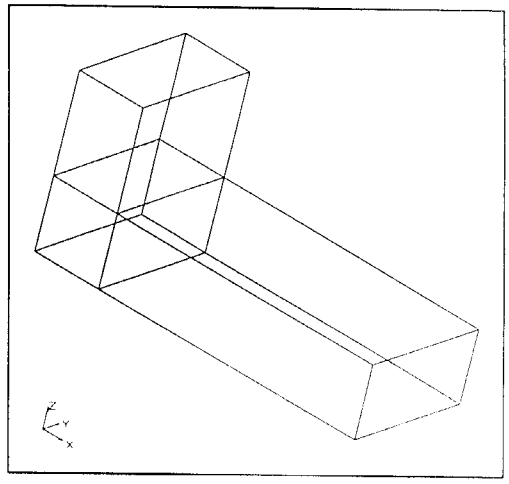

(b) Isometric View (X=-60, Y=-30, Z=-30)

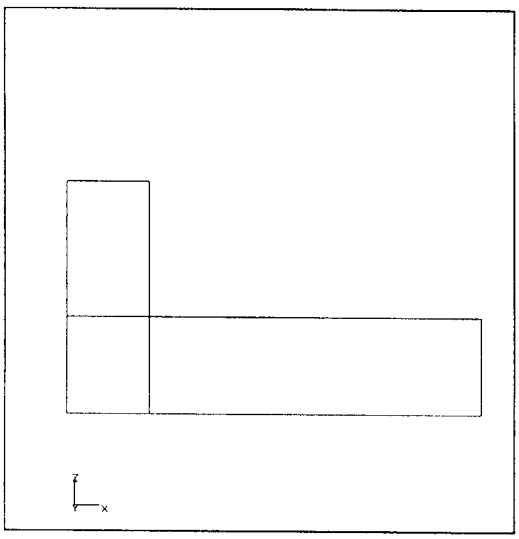

(c) Front View (X=-90, Y=0, Z=0)

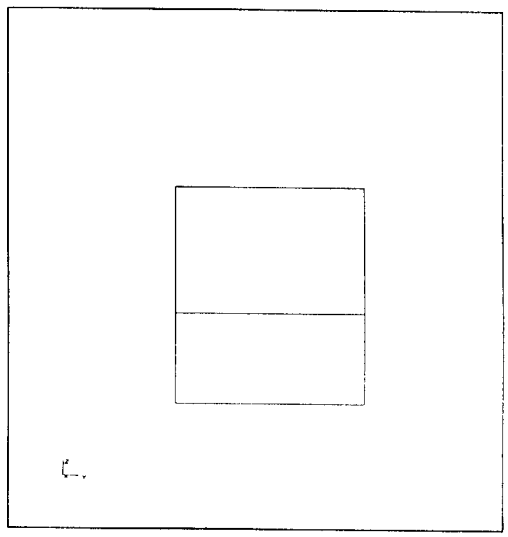

(d) Right View (X=-90, Y=-90, Z=0)

Fig. 2.8.6.3 Example of ROTATE Command

2.8.7 STATUS

The STATUS option lists the current values of all the view-option parameters on the root window.

```
Look at (x, y, z):                  0   0    0
Look from (x, y, z):                0   0   30
Distance from eye to origin:   30

Viewing Transformation Matrix:
1      0       0      0
0      1       0      0
0      0      -1      0
0      0      30      1

Rotation Transformation Matrix:
1      0      0      0
0      1      0      0
0      0      1      0
0      0      0      1

Lower left window (x, y) coordinates: -10.0, -9.05
Upper right window (x, y) coordinates: 10.0, 9.05
Near clipping plane: 1
Far clipping plane: 100
```

This represents a typical listing produced by the STATUS option. You can verify all your transformations through this listing.

2.8.8 VIEW PORT

The VIEWPORT option allows you to define multiple viewports within the graphics window. This is useful for displaying multiple viewing angles on the screen at once.

You can either define a viewport manually or select one of the four screen quarters automatically. Thus, if you select the AUTOMATIC mode,

Enter the quarter of the viewport

Specify an integer quantity (1-4) specifying the active quarter of the graphics window. The viewport quarters are numbered 1-4 as shown here:

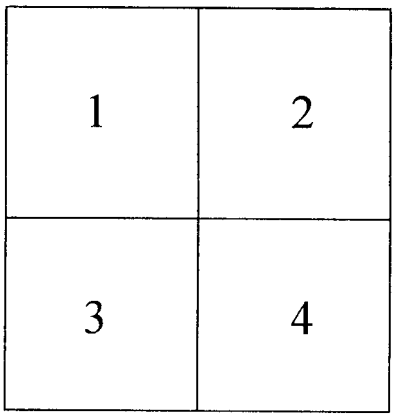

Fig. 2.8.8.1 VIEW-PORT Numbers

If the SET-DIGITIZER option is ON, the location and size of the new viewport can be selected directly by clicking the mouse on the screen. However, if the SET-DIGITIZER is OFF, the viewport is specified by inputting the coordinates in terms of coordinates. The values of screen coordinates can be between zero and one. Thus, a small viewport in the lower left corner of the screen would be given by (0,0) and (0.1,0.1), as shown in the following figure:

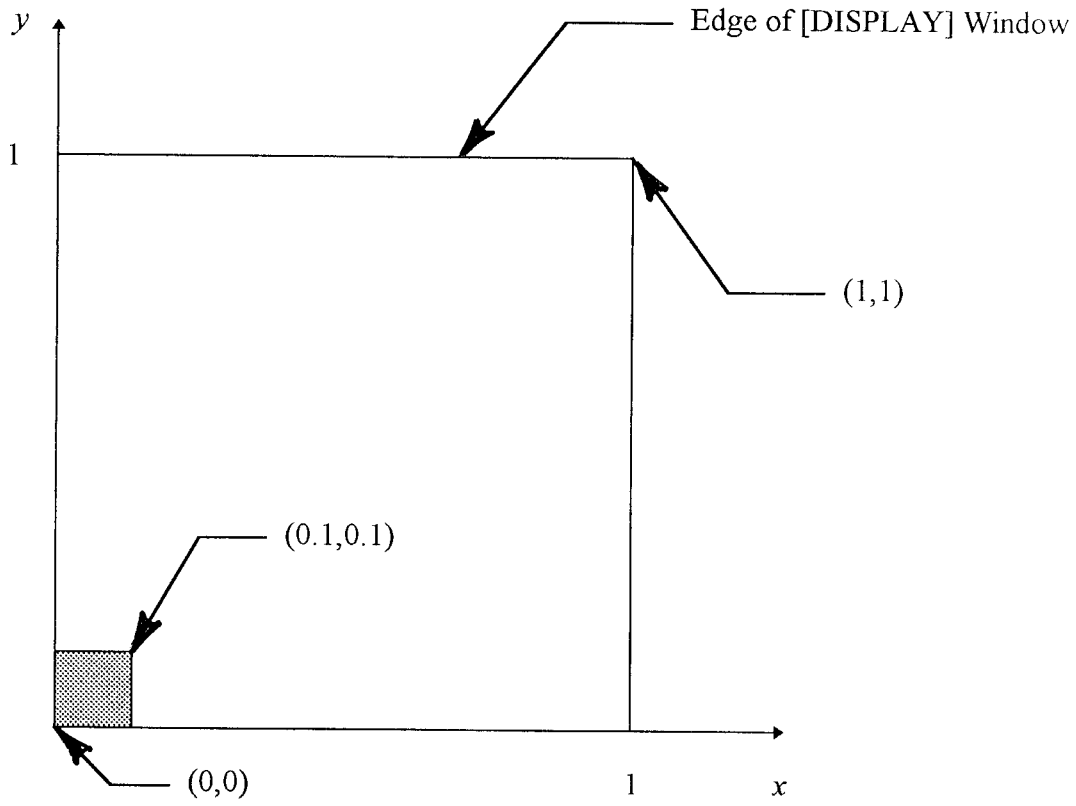

Fig. 2.8.8.2 Example of VIEW-PORT Definition

If you select the MANUAL mode,

If SET-DIGITIZER is ON,
Detect the lower left and upper right corners

If SET-DIGITIZER is OFF,
Enter (x, y) coordinates of lower left corner
Enter (x, y) coordinates of upper right corner

In order to exit the VIEW-PORT mode, select VIEW-PORT and specify MODE as OFF.

EXAMPLE

This example illustrates how to define a ‘‘top’’ view in the upper left corner of the screen and an ‘‘isometric’’ view in the lower right corner of the screen.

INPUT FOCUS	*COMMAND/DATA ENTRY*	*COMMENTS*
[MENU]	SET-DIGITIZER	
[PROMPT]	[OFF]	Do not use mouse to input coordinates of viewports.
[MENU]	VIEW-OPTIONS	
[MENU]	RESTORE	This initializes the viewing angle to the original values.
[MENU]	VIEW-PORT	
[PROMPT]	<ESC>AUTOMATIC [OK]	
[PROMPT]	<ESC> 1 [OK]	Specify viewport 1 (upper left)
[MENU]	CDRAW	The ‘‘top’’ view is displayed in viewport 1.
[MENU]	VIEW-PORT	
[MENU]	<ESC> AUTOMATIC [OK]	
[PROMPT]	<ESC> 4 [OK]	Specify viewport 4 (lower right).
[MENU]	ROTATE	
[PROMPT]	-60,-30,-30 [OK] [OK]	
[MENU]	CDRAW	The ‘‘isometric’’ view appears in viewport 4.
. . . etc.		Perform any other model manipulation options here. When you are done, turn the VIEW-PORT option OFF.
[MENU]	VIEW-PORT	Still under the VIEW-OPTIONS menu.
[PROMPT]	<ESC> OFF [OK]	Turn the viewports OFF.
[MENU]	CDRAW	Full screen view restored.

2.8.9 ZOOM

The ZOOM option allows you to blow up a specified portion of the model to the entire screen. The zoom window can be selected through the digitizer, or the corner screen coordinates can be input manually. Screen coordinates must be in the range between zero and one.

If you wish to redraw a zoomed view (perhaps after turning some entities OFF or certain labels ON), use the DRAW option. The CDRAW option draws the entire model, centered with respect to the graphics window/viewport, thus cancelling the effect of the ZOOM command.

If DIGITIZER is OFF
    Enter the first corner at the zoom window (x, y)
    Enter the opposite corner of the zoom window (x, y)

if DIGITIZER is ON
    Detect the lower left corner of the zoom window
    Detect the upper right corner of the zoom window

Depending on the mode of the display, you may have to respond to some of the following queries:

1. Do you want labels (alphabets) on the contour lines over the model (<Y>es/<N>o)
2. Do you want the undeformed shape also (Y/N)
3. Give a dot $< \cdot >$ as the first character to end input. Give string to be shown.
4. Want to edit (<Y>es/<N>o)

Query 1) If you set MODE $\Rightarrow$ LINE-CONTOUR, specify your choice (single, character input Y or N) for the display of labels over contour lines.

Query 2) If you set POST-RESULTS $\Rightarrow$ DEFORMED-GEOMETRY ON, specify your choice (a single character input Y or N) for the display of the undeformed geometry in dashed lines, along with the deformed geometry.

Query 3,4) For further details, refer to the TITLE option earlier on in this chapter.

EXAMPLE

This example demonstrates the use of the ZOOM command.

INPUT FOCUS	*COMMAND/DATA ENTRY*	*COMMENTS*
[MENU]	SET-DIGITIZER	
[PROMPT]	[ON]	Now the mouse can be used to select points in the [DISPLAY] window.
[MENU]	VIEW-OPTIONS	
[MENU]	ZOOM	
[DISPLAY]	(Click mouse button down, and while holding it down, move mouse to define a ZOOM box.)	
[DISPLAY]		Zoomed view is displayed in the [DISPLAY] window.
[MENU]	CDRAW	The zoomed view is canceled, and the full screen view is restored.

2.8.10 Z CLIP

The Z CLIP option lets you set the minimum and maximum Z-clipping planes in the world coordinate space. The values of the Z-minimum and Z-maximum are always positive real numbers. The current Z-minimum and maximum values are displayed on the root window for your reference. You must select the new clipping planes from that range.

Enter Z-clipping planes (near, far)

Specify the Z-CLIP near and far planes and issue a DRAW to get the desired view.

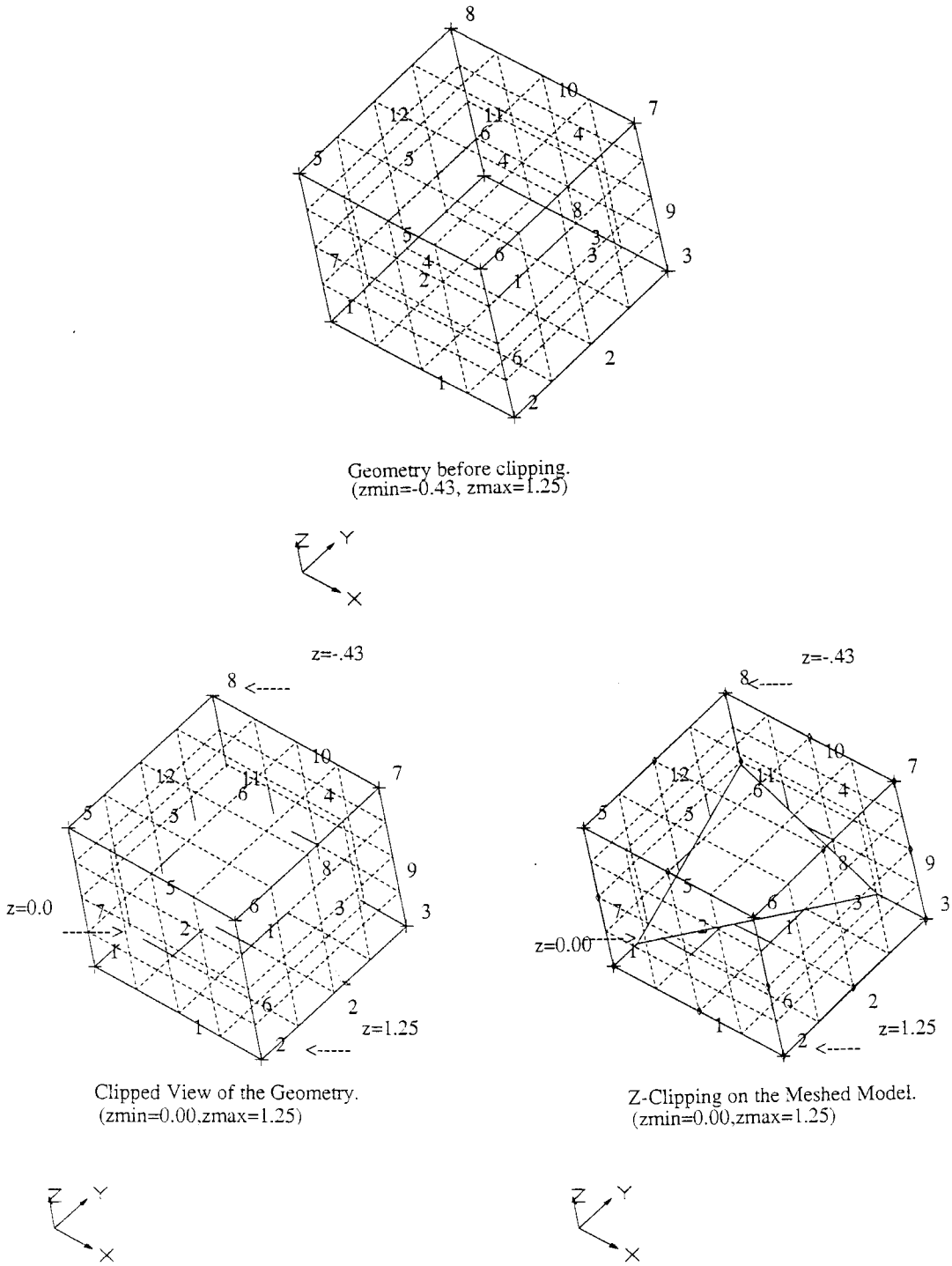

Fig. 2.8.10.1 Z-Clipping Geometric and Mesh Entities

(<u>NOTE</u>: As the axes in Fig. 2.8.10.1 have been rotated, point $\neq 8$ has a higher Z magnitude relative to you and hence, it is not clipped off, while point $\neq 4$ has a lower Z as compared to point $\neq 8$ and hence is clipped.)

2.8.11 SHOW BOUNDARY CONDITIONS

If you are preparing data for a model to be analyzed by GPBEST using the PREPARE ANALYSIS option (refer to Chapter 5), then you may be defining some boundary conditions (like tractions over certain elements, displacement constraints, etc.) over various parts of the model. BESTVIEW displays the boundary conditions, through proper icons, as they are defined by the BCSET option (see Chapter 5) for immediate verification. There is also a facility by which you can display icons for all the boundary conditions (or a specific type) over the complete model that might have been defined through several BCSET options. This facility is available any time during the data preparation process, as well as in multiple sessions (so long as you have the system generated file with a .ICN extension). If you need to visualize the boundary condition icons, click the current option then click the option you require from the following list that would be shown on the display menu:

1. ALL
2. X-SPRING
3. Y-SPRING
4. Z-SPRING
5. CONVECTION
6. FLUX
7. TEMPERATURE
8. N-DISPLACEMENT
9. N-TRACTION
10. X-DISPLACEMENT
11. Y-DISPLACEMENT
12. Z-DISPLACEMENT
13. X-TRACTION
14. Y-TRACTION
15. Z-TRACTION

In the above list, N stands for *normal* direction; x, y and z stand for the respective global directions.

For greater clarity in a complex model, you may see these icons with a hidden ON display. Following are the icon types for the various boundary conditions.

Boundary condition:	Icon :	Color :
Spring (in the corresponding global direction)		violet
Convection		green
Flux		pink
Temperature		red
Normal displacement		violet
Normal traction		cyan
Displacement (zero value) (in the corresponding global direction)		blue
Displacement (non-zero value) (in the corresponding global direction)		red
Traction (in the corresponding global direction)		yellow

Fig. 2.8.11.1 Various Boundary Condition Icons

In case you select this option and you are unable to see the submenu listing the various boundary conditions, the reasons could be as follows:

a. You did not yet generate any boundary condition data.

b. The file *model.ICN* is not present in the working directory (where *model* is the file name you selected when you started BESTVIEW).

c. If you are working on multiple sessions, the following files should be present in the working directory: *model.ICN*, *model.TEMP* and *model.DAT* (where *model* is the name of the file you selected when you started BESTVIEW).

The following is an example showing various icons over a specific model:

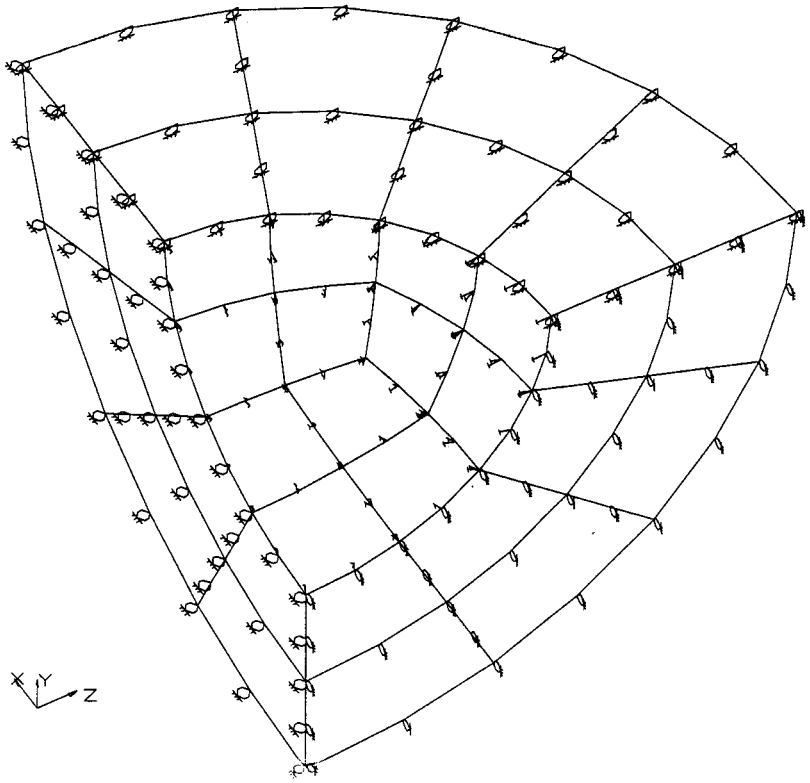

Fig. 2.8.11.2 Boundary Condition Icons Over a Model

Notice that the normal tractions on certain nodes show 2 directions, thereby signaling presence of *kinks* at those places.

2.8.12 STORE VIEW

The STORE VIEW option stores the current rotation transformations of the model in the file named ‘‘VIEWSET.BVIEW’’. There is no limit to the number of rotated views which could be stored using this option. These views can be named and recalled using the RECALL-VIEW option to be discussed in the next section. Important views of each model being worked with can be stored in VIEWSET.BVIEW. This file should be stored along with the model files. When you work with the same model later, copy the view file to VIEWSET-BVIEW so that selected views of the model can be recalled.

```
Enter a name for the view to be stored.
```

Character input of a name for this view is expected.

If some views already exist in VIEWSET.BVIEW,

```
The view names in the view file are:
View ID      View Name
   1            name 1
   2            name 2
   3            name 3
   ⋮              ⋮
```

If you specify a view name which already exists in the view file such as ‘‘name2’’:

```
View numbers 2 is already named name2.
Enter another name for this view.
```

In such a case, specify a unique name for the view to be stored. To check if this is stored in VIEWSET.BVIEW, select STORE-VIEW again and check the listing of view names, as shown in the previous page.

Note: It is important to realize that this option stores only the rotation transformations of the view. All other aspects, such as clipping planes and window limits are not stored. Therefore these operations must be redone through PAN, ZOOM, MAGNIFY or Z-CLIP once the view has been recalled using RECALL-VIEW.

STORE-VIEW also does not store information on the type of display, i.e., WIRE-MESH, LINE-CONTOUR, SHADED-IMAGE or FRINGE-PLOT. Hence, these must be set using MODE when RECALL VIEW is used.

2.8.13 RECALL VIEW

This option recalls the views which are stored in the VIEWSET·BVIEW file in the working directory. Note that, as was pointed out in Section 2.8.12, only the rotation transformations are recalled.

When VIEW OPTIONS ⇒ RECALL VIEW is selected,

```
The view names in the view file are
View ID      View Name
   1            name 1
   2            name 2
   3            name 3
   ⋮               ⋮
```

```
Enter the view name to be recalled.
```

A view name is expected.

The desired view of the model is automatically drawn on the graphics screen.

If an incorrect view name is specified,

```
Incorrect data from the view file. Returning
```

In such a case, check your input value of the view name.

2.8.14 UNDO VIEW

This option displays the previously displayed view on the graphics screen. The important aspect of this option is that all the viewing transformations such as rotations, window limits and clipping planes are set to the previously existing values. Thus, this is an important difference between the VIEW OPTIONS ⇒ RECALL and VIEW-OPTIONS ⇒ UNDO VIEW options. Thus, if PAN, ZOOM, MAGNIFY or Z-CLIP had been performed on the previous display, they will be repeated when UNDO VIEW is selected. Selection of this option automatically draws the picture on the graphics screen.

Note: A maximum of 5 previous views can be undone consecutively by using this option.

If UNDO is selected more often than the number of displayed views, then the following message will be displayed:

```
Warning! Nothing to be undone.
```

indicating that this UNDO-VIEW selection is inappropriate.

If the selection of UNDO-VIEW is indeed appropriate,

```
Recalling . . . view # n of the last 5 views displayed
```

will be displayed, indicating which one of the previous five views is recalled.

This option could be particularly useful when you zoom in too much on the model and would like to ‘‘dezoom.’’ The UNDO-VIEW could then be used appropriately.

Another use could be when a CDRAW has been used incorrectly while trying to redisplay a zoomed, panned or a magnified view. The UNDO VIEW could be used to redisplay the previous view.

NOTE: The display types, such as WIRE-MESH, FRINGE PLOT, LINE-CONTOUR or SHAPED-IMAGE are not changed by this option. **Thus, if the last displayed view was a FRINGE PLOT, UNDO-VIEW would display the previous view also as a FRINGE-PLOT, even though it may have been different.**

2.9 GROUPS

In order to collect several entities into one identifiable label, the GROUPS option may be used. While using the PREPARE ANALYSIS option to prepare the input data for subsequent analyses through GPBEST, the notion of a GROUP is similar to that of a GMR (in GPBEST terms). It is explicitly understood that in the PREPARE ANALYSIS stage, all the nodal and element information for each GMR will be furnished by some GROUP definition containing requisite entities. If you need to use the FAST MESH option (discussed in Art. 4.7), you should use the GROUPS option to place different surfaces (patches) in various groups. Other than just to define GROUPS, there are other options which perform various actions over GROUPS. For example, after you have read in results of a successful GPBEST run through a Neutral file using READ GPBEST RESULT (discussed in Art. 6.3), you can view them over individual GMRs using an option RESULTS ON GROUP. Similarly, if you wish to perform certain element-level quality checks in the pre-processing or post-processing stage, simply select the QUALITY CHECK option for the specific GROUP required.

The GROUPS option allows you to manipulate various groups by adding or deleting entities, removing existing groups, renaming groups and saving changes under a common group. Points, lines, surfaces, elements and nodes can be manipulated with the GROUPS option.

Although there are a variety of options available under the GROUPS menu, there are other commands that are useful when manipulating and displaying groups in BESTVIEW:

LIST⇒GROUP
: This gives a list of all the GROUP names in the current database. This command is extremely useful when working with GROUPS.

DISPLAY-OPTIONS⇒ENTITY⇒GROUP⇒ON
: This colors the various GROUPS with different colors, thereby distinguishing them from each other.

DISPLAY-OPTIONS⇒COLOR⇒GROUP
: Assigns specific colors to GROUPS.

DISPLAY-OPTIONS⇒LABEL⇒GROUP
: Displays the GROUP names directly on the screen.

PLOT
: Displays only specific groups on the screen.

The following points regarding groups in BESTVIEW should be kept in mind:

1. Groups can overlap. For example, an element can belong to two different groups.

2. Any model that originates in a NEUTRAL file will have at least one GROUP in BESTVIEW.

2.9.1 ADD ENTITY

This option allows you to add an entity or range of entities to a group. The following entities may be added:

1. Element
2. Line
3. Point
4. Surface

Entities may be added by entering through the keyboard if the digitizer is off, or by picking the entities from the display if the digitizer is on. Note that you are not required to place nodes in the GROUP definition. Whenever you add an element to a specific group, the associated nodes are also stored in the group automatically.

When you select this option, the system asks:

```
Enter the name of the group:
```

A character input is expected.

The group name could be a new one or a previously used one. Once you select a group name, you are ready to add any entity by selecting the required entity type. The method of selection is the same for all of them. For example if you have selected ELEMENTS:

If the digitizer is ON, you would be asked to:

```
Detect elements ((a)bort, (e)xit, (k)eyboard)
```

After detecting the required elements by choosing them from the screen, press ‘‘e’’ to exit this prompt. If you make a mistake, you can either press ‘‘a’’ or you can make a note of the wrong entity and use the ERASE ENTITY option later.

If the digitizer is OFF, the system will say:

```
Enter range of elements (# to quit):
```

Give a single value to identify one entity or two values to define the start and end of a range.

After adding all the required entities in the group, select GLOB.GROU.ADD UP to return to the GROUPS menu.

EXAMPLE

Create a new group named ‘‘STEEL’’, and add elements 9-11 to the group:

INPUT FOCUS	*COMMAND/DATA ENTRY*	*COMMENTS*
[MENU]	SET-DIGITIZER	
[PROMPT]	[OFF]	User can type in element numbers if SET-DIGITIZER is OFF.
[MENU]	GROUPS	
[MENU]	ADD ENTITY	
[PROMPT]	STEEL [OK]	Name of new group.
[MENU]	ELEMENT	
[PROMPT]	<ESC>9,11[OK]<ESC> <ESC>	Elements 9,10,11.
[PROMPT]	[YES]	The [PROMPT] window displays a message: ‘‘Save the current changes.’’ Choose [YES].
[PROMPT]	<ESC>CYAN [OK]	The [PROMPT] windows displays a message: ‘‘ENTER DESIRED COLOR.’’ Choose CYAN for this group color.

2.9.2 ERASE ENTITY

This option allows you to delete an entity from a specific group definition. The following entity types may be erased:

1. Element
2. Line
3. Point
4. Surface

Analogous to the ADD ENTITY option, if you erase an element, the associated nodes are erased if they do not belong to any other element defined in the group.

When you select this option, the system will ask:

Enter the name of the group:

A character input is required.

If you enter a name that does not exist, the system will generate an error message. For a valid group name, you are ready to erase any entity by selecting the required entity type. The methods of selection are the same as described in the previous option (2.9.1). You will either be asked to detect entities or declare a range. You can return to the GROUPS menu by selecting GLOB.GROU.REMO UP.

EXAMPLE

Erase element 11 from the group named ‘‘STEEL.’’ Do not delete the element from the database, merely disconnect it from the group:

INPUT FOCUS	*COMMAND/DATA ENTRY*	*COMMENTS*
[MENU]	SET-DIGITIZER	
[PROMPT]	[OFF]	User can type in element number if SET-DIGITIZER is OFF.
[MENU]	GROUPS	
[MENU]	ERASE ENTITY	
[PROMPT]	STEEL [OK]	Name of an existing group.
[MENU]	ELEMENT	
[PROMPT]	<ESC>11 [OK]<ESC> <ESC>	Element 11
[PROMPT]	[YES]	The [PROMPT] window displays a message: ‘‘Save the current changes.’’ Choose [YES]. At this point, element 11 no longer belongs to the group STEEL.

2.9.3 RENAME GROUP

Use this option to change the name of a group. The system will display the following prompts:

```
Enter the old group name
Enter the new group name
```

Character strings are expected.

The system will report an error message if the ‘‘old group name’’ given does not exist. Check the current groups active in the database through the LIST - GROUPS option. Also check for spelling errors while entering the ‘‘old group’’ name.

EXAMPLE

Rename the current GROUP named ‘‘STEEL’’ to a new name, ‘‘ALUMINUM’’:

INPUT FOCUS	*COMMAND/DATA ENTRY*	*COMMENTS*
[MENU]	GROUPS	
[MENU]	RENAME GROUP	
[PROMPT]	STEEL [OK]	Name of an existing group.
[PROMPT]	ALUMINUM [OK]	New name of the group.

2.9.4 DELETE

The DELETE option allows you to delete a group from the database. It also allows you to delete all associated entities. If you choose to do so, check to make sure that none of the deleted entities are parts of other groups.

```
Enter the name of the group to be deleted
Group entities to be desired
(default: No)
```

Specify the group to be deleted from the database and whether the associated entities are to be deleted also.

NOTE: You should be very careful if you answer ‘‘Yes’’ to the second prompt. This will delete all the entities in the group as well as the group name. Since there is no ‘‘UNDO’’ option in BESTVIEW, this should be carried out with extreme caution.

EXAMPLE

Delete the GROUP named ‘‘STEEL,’’ but do not delete its elements from the database:

INPUT FOCUS	*COMMAND/DATA ENTRY*	*COMMENTS*
[MENU]	GROUPS	
[MENU]	DELETE GROUP	
[PROMPT]	STEEL [OK]	Name of an existing group.
[PROMPT]	[NO]	The [PROMPT] window displays a message: ‘‘GROUP ENTITIES TO BE DELETED?’’ Respond with [NO], which means that the elements in this group will remain in the database.

EXAMPLE

Delete the GROUP named ‘‘STEEL,’’ and also delete all elements in the group:

INPUT FOCUS	*COMMAND/DATA ENTRY*	*COMMENTS*
[MENU]	SAVE	It is a good idea to save the database before deleting a major part of it, such as a GROUP.
[ROOT]	db.before.del <CR>	Name of database; in case the deletion does not go as planned.
[MENU]	GROUPS	
[MENU]	DELETE GROUP	
[PROMPT]	STEEL [OK]	Name of an existing group.
[PROMPT]	[YES]	The [PROMPT] window displays a message: ‘‘GROUP ENTITIES TO BE DELETED?’’ Respond with [YES], which means that the elements in this group will also be deleted from the database.
[MENU]	CDRAW	The whole group is gone.

2.9.5 RESULT ON GROUP

This option works only after you have used the READ GPBEST RESULTS to download the results and model information from a GPBEST generated Neutral file.

If you are dealing with a model containing multiple GMRs while using the READ GPBEST RESULTS option, you will be asked for the Neutral file name and the GMR-id you would like to view. If you are not certain as to which GMR results are more critical, or you would like to get an overall ‘‘feel’’ of the structural behavior, you may ask the system to bring in results over all the GMRs. You may then inspect the results and view a specific GMR (especially to view the results over the interface elements, over which the whole model is always hidden by a surface in the front of the display). To do this, you may select the READ GPBEST RESULTS option, but it will again ask you for the Neutral file-name (as that option was meant to read results from any Neutral file). Instead, use the current option so that, once you have results for a specific Neutral file, this option will require only the GMR-id over which you want the results to be brought in.

Results must be brought in using the READ GPBEST RESULTS at the first instance. This option may also be used for all subsequent results.

Based on your current status in BESTVIEW, selection of this option will give you any one of the following:

(a) When you have a multi-GMR model and the READ GPBEST RESULTS option has already been used to get results (either over the whole model, or a specific GMR):

```
The GMR names in the current Neutral file are:
GMR-id      GMR-name
   1        bottom-compo
   2        compo-1
   3        compo-2
   4        top-compo
Give GMR-id you wish to see <99 (for all GMRs)>:
```

An integer is expected.

GMR-names and the number of GMRs will obviously depend on the model.

(b) If you have not used the READ GPBEST RESULTS at least once, you will receive the following message:

```
Select READ GPBEST RESULTS to read a Neutral file first, then use this option
to see results on individual (or all) GMRs.
```

Obviously, BESTVIEW does not have any prior knowledge about the name of the Neutral file on which it will operate.

2.9.6 QUALITY CHECK

This option generates information necessary to verify element quality attributes (extensively explained in GENERATE MESH - QUALITY CHECK ATTR, Chapter 4) of elements belonging to a GROUP (or functionally, a GMR, in terms of GPBEST). If you select this option and there is no group defined in BESTVIEW, this option will give the following message:

```
ERROR! Element quality check can only be done after defining
elements in GROUPS.
```

In the pre-processing stage, mesh information can be built-up, either within BESTVIEW using the mesh generation options, or through the IGES or IMPORT option (explained in Chapter 3). Some options automatically cluster proper elements and define different GROUPS. For others, the GROUPS must be manually defined. Once you have identified GROUPS and defined elements in each of them, before you move on to the PREPARE ANALYSIS option to create data for GPBEST analyses, it is always recommended to use the current option followed by a QUALITY CHECK ATTR option to verify the element characteristics.

At the post-processing stage, when you use READ GPBEST RESULTS to bring information from the Neutral file, based on the GMR information elements are automatically put in various GROUPS in BESTVIEW. Clicking this option will allow BESTVIEW to generate element quality characteristics for each GROUP. So in case you wish to check the element quality for the mesh already analized, all you would have to do after clicking this option select the QUALITY CHECK ATTR option.

At this point, assume that you have different groups containing mesh information. You could either be in the pre or post-processing stage. When you select the current option, the system would give you a list of all the GROUPS defined and would ask:

```
The following GROUPS (or GMRs) are present:
GMR-id      GMR-name
   1        bottom-compo
   2        compo-1
   3        compo-2
   4        top-compo
Give GMR-id you wish to see <99 (for all GMRs)>:
```

An integer is expected.

The GMR-ids and names given above are just for the purpose of an illustration. The system will show the ones that actually exist in your model. The above prompt will not appear if you have a single GROUP (i.e., one-GMR problem).

Remember that this option only generates information necessary for checking element attributes. The actual visual interpretation is available only after you select the GENERATE MESH - QUALITY CHECK ATTR option.

2.9.7 PROPERTY CALC

This option can be invoked once the model has been grouped and meshed. It computes important geometric properties of individual groups and the model as a whole.

For a 2D or an axisymmetric model, the perimeter, planar area, surface area, volume (assuming unit thickness) and centroid x,y coordinates are computed.

For a 3D model, the surface area, volume and centroid x,y,z coordinates are computed.

It is important to note that, in the computation of properties for the entire model, the geometric properties (length, surface area) of the interface elements are ignored.

This option also performs an additional function. It reorients the element connectivity so as to achieve a positive normal direction for each GMR. This eliminates manual normal card definitions for analysis through GPBEST.

Note that selection of this option before proceeding to PREP⇒ANAL is *no longer mandatory*. The reorientation of connectivity is also performed unconditionally when PREP⇒GMR is selected.

For 2D and axisymmetric models

Are you solving an axisymmetric model

Respond as the case may be.

The sample output produced for a 3D model with 2 groups defined, each one being a cube of dimension 10 units, with two internal cubic cutouts of one unit dimension each, is shown below.

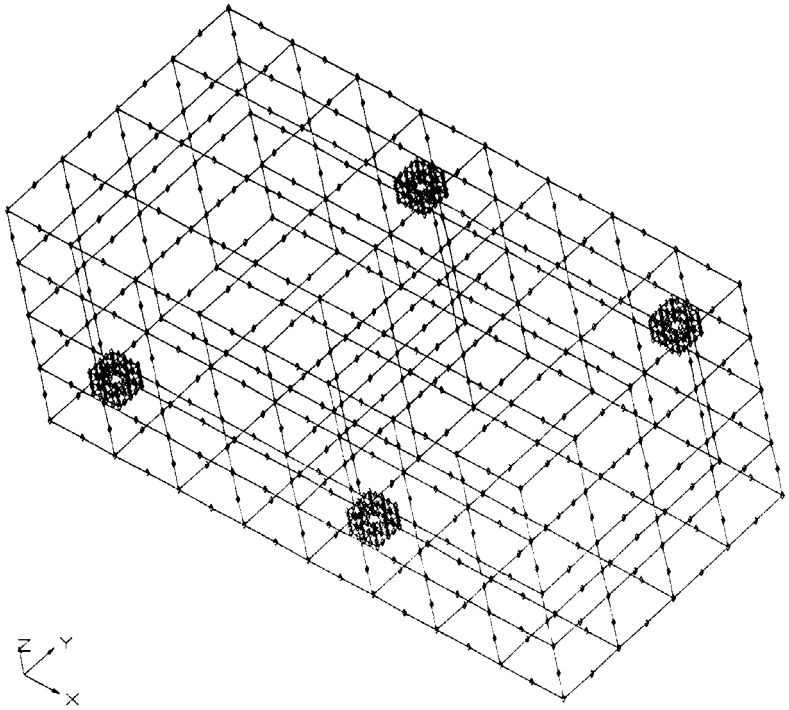

GMR NAME	SURFACE AREA	VOLUME	XCG	YCG	ZCG
g01	6.12E+02	9.98E+02	5.0E+00	5.0E+00	5.0E+00
g02	6.12E+02	9.98E+02	1.5E+01	5.0E+00	5.0E+00
TOTAL	1.024E+03	1.996E+03	1.0E+01	5.0E+00	5.0E+00

Fig. 2.9.7.1 An illustration of the PROPERTY CALC. Option

2.10 PLOT

The PLOT option erases the screen and then draws the entity, or range of entities, on the graphics window/viewport. PLOT allows you to selectively display certain entities.

> Enter limits (lower, upper)
> Enter group name to plot

Specify the range of the particular entities you wish to be plotted. If you are plotting groups, specify the group name.

Note that you cannot use this option in conjunction with DISPLAY-OPTIONS ⇒ HIDDEN. The PLOT option always plots entities with HIDDEN as OFF.

You do not need to do a CDRAW, DRAW, etc. to see the resulting display. PLOT displays the desired entities on the screen immediately. A subsequent CDRAW (or DRAW) erases the screen and displays all entities.

EXAMPLE

Clear the screen, and the plot only elements 5 through 8:

INPUT FOCUS	*COMMAND/DATA ENTRY*	*COMMENTS*
[MENU]	PLOT	
[MENU]	ELEMENT	
[MENU]	<ESC> 5,8 [OK]	Elements 5 through 8 are immediately plotted in the [DISPLAY] window.

EXAMPLE

Clear the screen, and then plot only the GROUP named ‘‘STEEL’’:

INPUT FOCUS	*COMMAND/DATA ENTRY*	*COMMENTS*
[MENU]	PLOT	
[MENU]	GROUP	
[PROMPT]	STEEL [OK]	The GROUP named ‘‘STEEL’’ is immediately plotted in the [DISPLAY] window.

2.11 HARDCOPY

The HARDCOPY option allows you to create standard, printable files corresponding to the image being plotted. Encapsulated postscripts, HP-GL/2, standard postscripts color postscripts and tektronix files are currently supported.

You must follow up your HARDCOPY selection with a CDRAW, DRAW, PLOT, PAN, ZOOM or MAGNIFY option so that the information is echoed to the file, which can then be printed.

Note that the FRINGE-PLOT option is not available for HARDCOPY.

All of the HARDCOPY sub-options close the plot file immediately after CDRAW, DRAW, PLOT, PAN, ZOOM or MAGNIFY. The exception is the HARDCOPY ⇒ STANDARD-POSTSCRIPT sub-option which allows you to stack plots up in a single file. Refer to the examples given.

2.11.1 ENCAPSULATED POSTSCRIPT

The ENCAPSULATED-POSTSCRIPT option is used to create a file in the encapsulated postscript format for the next CDRAW, DRAW, PAN, ZOOM, MAGNIFY or PLOT command that is used. After executing any one of these commands, the file is automatically closed.

```
Enter the ENCAPSULATED POSTSCRIPT file name
(default: bview.eps)

Enter the maximum line thickness (in inches)
(default: 0.005)
```

Specify the postscript file name and the maximum line thickness for the final plot. Usually, a line thickness of about 0.005″ produces good results.

EXAMPLE

INPUT FOCUS	*COMMAND/DATA ENTRY*	*COMMENTS*
[MENU]	HARDCOPY	
[MENU]	ENCAP.-POSTSCRIPT	
[PROMPT]	[OK]	Accept the default name for the ENCAPSULATED POSTSCRIPT file, 'bview.eps'.
[PROMPT]	<ESC> .005 [OK]	This is a good general line thickness for postscript plots.
[MENU]	CDRAW	The geometry is displayed on the screen and is also sent to the postscript file. The postscript file is closed.
[UNIX]	lpr -Pps_prn bview.eps	Print the postscript file using the standard UNIX print command. Here the postscript printer device is named 'ps_prn'.

2.11.2 HP-GL/2

The HP-GL/2 option is used to create a file in the GL format for the next CDRAW, DRAW, PLOT, PAN, ZOOM or MAGNIFY command issued. The file is automatically closed and can then be printed using a printer capable of interpreting HP-GL/2 commands.

Enter the HP-GL/2 filename
(default: bview.gl)

Enter line thickness (in millimeters)
(default: 0.2)

Enter maximum x-picture size (in centimeters)
(default: 27)

Enter maximum y-picture size (in centimeters)
(default: 20)

Specify the GL filename and the line thickness. Specify the maximum x and y picture size limits. Generally, the default values are adequate for most purposes.

EXAMPLE

INPUT FOCUS	*COMMAND/DATA ENTRY*	*COMMENTS*
[MENU]	HARDCOPY	
[MENU]	HP-GL/2	
[PROMPT]	[OK]	Accept the default name for the HPGL file, ‘bview.gl’.
[PROMPT]	<ESC> .02 [OK]	This is a good general line thickness for HPGL plots.
[PROMPT]	[OK][OK]	Accept default values for plot size, etc.
[MENU]	CDRAW	The geometry is displayed on the screen and is also sent to the postscript file. The HPGL file is closed.
[UNIX]	lpr -Php_prn bview.gl	Send the HPGL file to a plotter using the standard UNIX print command. Here the plotter device is named ’hp_prn’.

2.11.3 STANDARD POSTSCRIPT

This option is similar to the ENCAPSULATED-POSTSCRIPT option, with one important difference. In the ENCAPSULATED-POSTSCRIPT option, only the next DRAW, CDRAW or PLOT option is echoed to the postscript file, which is then immediately closed. But in the STANDARD-POSTSCRIPT option, all subsequent CDRAW, DRAW, PLOT, PAN, ZOOM, and MAGNIFY options are echoed to the postscript file, until you set STANDARD-POSTSCRIPT ⇒ OFF when the file is closed. The multiple plots will constitute separate pages and will not stack on top of each other.

```
Enter ON of OFF
(default: OFF)

Enter the postscript file name
(default: bview.ps)

Enter maximum line thickness in inches
(default: 0.005)
```

Specify the standard postscript filename, and the maximum line thickness. Generally, a line thickness of about 0.005″ is adequate.

EXAMPLE

INPUT FOCUS	*COMMAND/DATA ENTRY*	*COMMENTS*
[MENU]	HARDCOPY	
[MENU]	STANDARD-POSTSCRIPT	
[PROMPT]	[ON]	Turn this plot option ON.
[PROMPT]	[OK]	Accept the default name for the STANDARD-POSTSCRIPT file, ‘bview.ps’.
[PROMPT]	<ESC> .005 [OK]	This is a good general line thickness for postscript plots.
[MENU]	CDRAW	The geometry is displayed on the screen and is also sent to the postscript file. However, the postscript file is left open so more plots can be added.
[MENU]	GLOB.HARD UP	Move up one menu.
[MENU]	VIEW-OPTIONS	Rotate model for second plot.
[MENU]	ROTATE	
[PROMPT]	-60, -30, -30 [OK][OK]	
[MENU]	CDRAW	Second plot is sent to the postscript file.
[MENU]	HARDCOPY	
[MENU]	STANDARD-POSTSCRIPT	
[PROMPT]	[OFF]	Turn this plot option OFF.
[ROOT]		Message appears in the [ROOT] window: ‘‘Closing Postscript File.’’
[UNIX]	lpr -Pps_prn bview.ps	Print the postscript file using the standard UNIX print command. Here the postscript printer device is named ‘ps_prn’.

2.11.4 TEKTRONIX

The TEKTRONIX option creates a file in the tektronix escape sequences for the next CDRAW, DRAW, PAN, ZOOM or MAGNIFY option issued, and is automatically closed. The file can then be printed on any printer or plotter capable of interpreting tektronix escape sequences.

> Enter the tektronix file name
> (default: bview.tek)

Specify the tektronix filename to be created.

2.11.5 SCREEN IMAGE

This option allows the user to make a color or greyscale postscript dump of the BESTVIEW display window. For example, this may be used to record the fringe plot where the fixed level information is translated into the corresponding postscript format.

The postscript file generated by this option is **pscolor.ps**. This file is overwritten every time this option is executed. So, in order to record multiple fringe plots it is always advisable to open another UNIX-window, go to the location from where BESTVIEW is being executed, and rename **pscolor.ps** to a suitable name before embarking on the next color postscript dump.

When this option is selected, the following is displayed:

> Do you want a COLOR postscript file?
>
> Yes No

If NO is selected (if a greyscale postscript printer is being used) then the greyscale information is generated for the *PS* file. Otherwise, a color *PS* file is created (for which you need a color postscript printer). The next DRAW, CDRAW, PAN, ZOOM, MAGNIFY or PLOT action is recorded in the **pscolor.ps** file and the file is closed.

EXAMPLE

INPUT FOCUS	*COMMAND/DATA ENTRY*	*COMMENTS*
[MENU]	HARDCOPY	
[MENU]	POSTSCRIPT-SCRN-IMG	
[PROMPT]	[NO]	Do not take a color postscript dump. Create a greyscale input
[MENU]	DRAW	The model is displayed on the screen and is also sent to the postscript file. The postscript file is closed.
[UNIX]	cp pscolor.ps view1.ps	Copy the pscolor.ps file generated by this option to some suitable name.
[UNIX]	lpr -Pps_prn view1.ps	Print the postscript file now, using the standard UNIX print command. Here the postscript printer device is named *ps_prn*.

2.12 DIGITIZER

2.12.1 GRID SET

The GRID-SET option sets the grid snapping distance. It also allows you to turn the grid display ON of OFF. If you specify a zero step size, snapping is not performed for the graphical input.

> Enter GRID SET size (0 for no grid snapping)
> (default: 0)
>
> GRID DISPLAY ON or OFF

Specify the grid step size (a real number) and set the grid display ON or OFF, as desired.

The value of the ‘‘GRID SET size’’ is given in *model* dimensions. For example, if the model is 100mm long, a GRID SET size of 25 would give four grids for the length of the model.

It should also be noted that the grid appears in the $x - y$ plane of the model coordinates. Hence, the grid appears skewed when you view the model in an oblique view.

EXAMPLE

INPUT FOCUS	*COMMAND/DATA ENTRY*	*COMMENTS*
[MENU]	DIGITIZER	
[MENU]	GRID-SET	
[PROMPT]	<ESC> 17 [OK]	The size of the grid blocks will be 17×17 in *model coordinates*.
[PROMPT]	[ON]	Turn the grid display ON.
[DISPLAY]		At this point, the grid display appears in the [DISPLAY] window, along with the model.

2.12.2 Z VALUE

The Z VALUE option allows you to specify a Z-coordinate for all the subsequent points selected with the digitizer.

```
Enter constant Z VALUE
(default: 0.00)
```

Specify the depth for all subsequent points to be selected. As the Z remains constant, all the points will be created in the same plane.

The grid plane will be placed at the z-VALUE point above or below the model $x - y$ plane.

EXAMPLE

INPUT FOCUS	*COMMAND/DATA ENTRY*	*COMMENTS*
[MENU]	DIGITIZER	
[MENU]	GRID-SET	
[PROMPT]	<ESC> 17 [OK]	The size of the grid blocks will be 17×17 in *model coordinates*.
[PROMPT]	[ON]	Turn the grid display ON.
[DISPLAY]		At this point, the grid display appears in the [DISPLAY] window, along with the model.
[MENU]	DIGITIZER	
[MENU]	Z-VALUE	
[PROMPT]	<ESC> 13 [OK]	The grid plane will appear at $z = 13$, where z is the *model z* axis.
[MENU]	CDRAW	The model and grid plane are displayed in the [DISPLAY] window.

2.13 SET DIGITIZER

The SET-DIGITIZER mode turns the digitized input mode ON or OFF.

```
Enter ON or OFF
```

Specify your option for the digitized input mode.

There are times when you are prompted to specify a location in space for an entity, or when you need to select a certain entity. In this case, if SET-DIGITIZER is ON, the mouse can be utilized for this purpose.

EXAMPLE

INPUT FOCUS	*COMMAND/DATA ENTRY*	*COMMENTS*
[MENU]	DIGITIZER	
[MENU]	GRID-SET	
[PROMPT]	<ESC> 17 [OK]	The size of the grid blocks will be 17×17 in *model coordinates*.
[PROMPT]	[ON]	Turn the grid display ON.
[DISPLAY]		At this point, the grid display appears in the [DISPLAY] window, along with the model.
[MENU]	DIGITIZER	
[MENU]	Z-VALUE	
[PROMPT]	<ESC> 13 [OK]	The grid plane will appear at $z = 13$, where z is the *model z* axis.
[MENU]	CDRAW	The model and grid plane are displayed in the [DISPLAY] window.
[MENU]	SET-DIGITIZER	
[PROMPT]	[ON]	This allows you to select points with a mouse directly on the [DISPLAY] window.
[MENU]	DEFINE-GEOMETRY	
[MENU]	POINT	
[MENU]	ENTER	
[PROMPT]	1 [OK]	This is the starting point number.
[DISPLAY] [DISPLAY]	(Select 4 points in the window.)	As you select the locations with the mouse, the cursor snaps to the nearest grid point of the GRID plane.
[DISPLAY]	a	Press "a" to end point selection.

2.14 LIMITATIONS

1. The PLOT option cannot plot hidden line views.

2. You must have at least two points or two nodes defined in the database before you issue a CDRAW. If you issue a CDRAW with only one point or node defined, and no other entities defined, you must discontinue your current session and use INITIALIZE to restart the session.

3. In the SHOW-BC option, once you specify a set of boundary conditions and confirm your entity, the respective icons and their positions are recorded in the .ICN file. Hence, although you can modify the data file outside BESTVIEW, the .ICN file would remain unchanged and would still show you the previous boundary conditions.

3.0 DEFINING THE GEOMETRY

3.1 INTRODUCTION

The BESTVIEW geometry modeler is available under the DEFINE GEOMETRY option. A geometric model is defined by specifying a hierachy of points, lines and surfaces. Several sophisticated model generation and graphical input techniques are available so that you can generate complex models efficiently. Some of the features include graphical input with the mouse, automatic generation of intersections of the lines and surfaces, creation of new geometric entities by simple geometric transformations of existing entities and the assembly of several *sub* models into the final model for analysis.

3.1.1 BASIC GEOMETRIC ENTITIES

The basic geometric entities supported are points, lines and surfaces. Higher geometric entities are internally represented in terms of the lower order entities (i.e., lines are internally represented in terms of the points comprising them, surfaces in terms of the edges). Thus, in defining a geometric model for analysis, it is necessary to completely define the boundary (lines in two dimensions and surfaces in three dimensions) using the basic geometry entities.

NOTE: The current version of BESTVIEW does not support solid entities.

3.1.2 DUPLICATION OF ENTITIES

During the process of geometry definition, two or more entities may be generated very close to each other and it may be necessary to consider them as a single entity. BESTVIEW automatically eliminates duplicate points and lines generated during the geometry building process. Duplication of surfaces is not checked in this process.

3.1.3 REPRESENTATION OF BASIC ENTITIES

POINTS: Points are internally represented by a point ID, the coordinates and the relevant coordinate Frame ID. All coordinates are defined with respect to the currently active coordinate frame.

LINES. The internal representation of lines depends on the line type and is briefly discussed here.

STRAIGHT LINES are represented by their ID and the end point IDs.

ARCS OR QUADRATIC LINES are represented by their IDs and the IDs of the three points which define them.

CUBIC LINES are represented by their IDs and the IDs of the four points along the line.

PARAMETRIC LINES are represented by their IDs and the 12 parametric coefficients, defined as follows:

$$x = a_o + a_1 t + a_2 t^2 + a_3 t^3$$

$$y = b_o + b_1 t + b_2 t^2 + b_3 t^3$$

$$z = c_o + c_1 t + c_2 t^2 + c_3 t^3$$

where $0 \leq t \leq 1$, and the coefficients are defined with respect to the active coordinate frame.

MERGED LINES are represented by their ID and the lines of which they are comprised.

SURFACES. Surfaces are internally represented by their IDs and the 4 IDs of the lines bounding them in a natural order.

3.2 THE DEFINE GEOMETRY OPTION

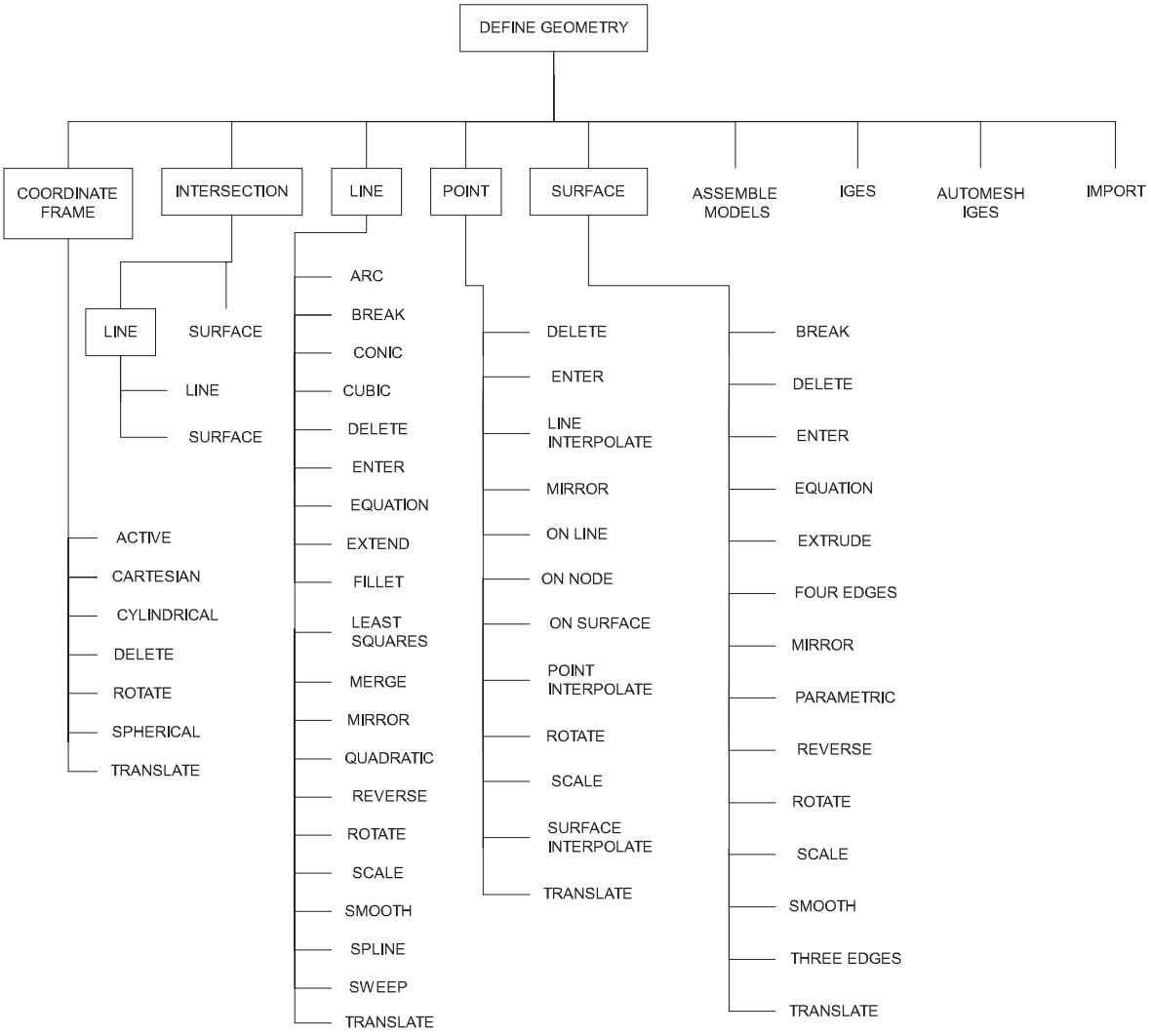

3.2.1 GENERAL TIPS FOR EFFICIENT GEOMETRIC MODELING

Geometric modeling of complex objects for engineering analysis is a difficult task. It is the objective of this section to provide guidance for greater efficiency in modeling.

In the creation of sufficiently complex geometric models, you may go through several operations on various entities. For instance, certain entities may be deleted, line segments may be broken along their length for aid in defining patches, entities may be translated, rotated, or swept about the active coordinate directions to create new entities, etc. In certain situations when there are a large number of entities on display, *identification of specific entities on which to operate could prove to be a cumbersome task*. BESTVIEW provides a variety of features to help overcome this difficulty. Some of these include options to HIGHLIGHT specific (or a range of) entities, capabilities to zoom in portions of the screen for a vivid display, dashed lines for surface filling to check the parametric directions, facilities to turn entities ON or OFF on the display as needed and labeling of entities and options to select colors for various entities.

Here is an illustrative example:

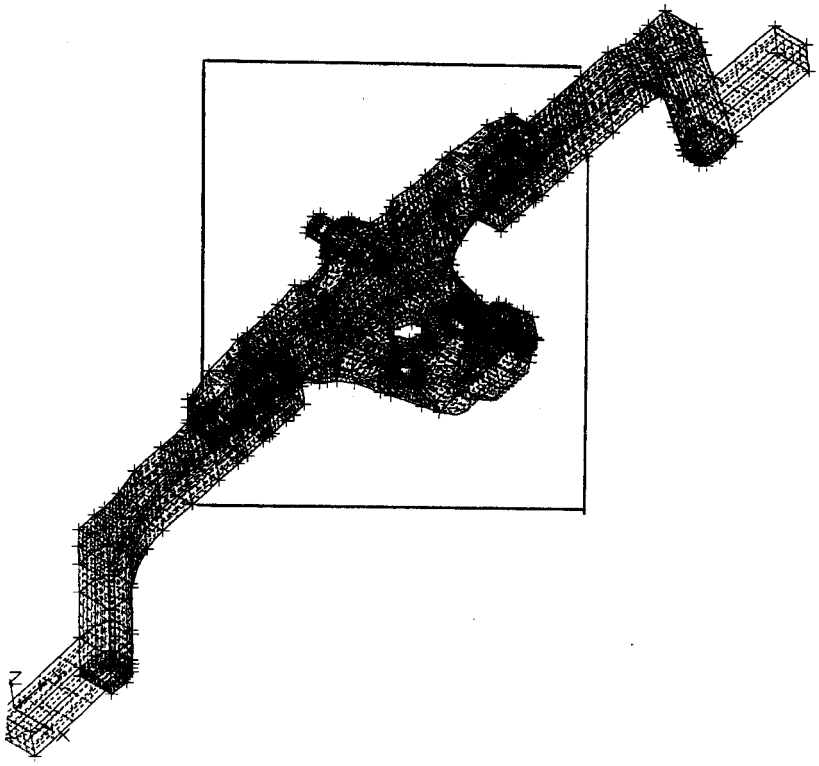

Fig. 3.2.1.1 Model of a Machine Component (All Entities on Display)
(Box Denotes Area Zoomed for 3.2.1.2)

Fig. 3.2.1.1 represents a geometric model of a machine component. In the display, all the geometric entities are ON. In the present state, it is impossible to focus on a specific entity or a group of entities. In order to view a group of surfaces located within the box shown in Fig. 3.2.1.1, zoom in the general area you are interested in and then focus on specific entities.

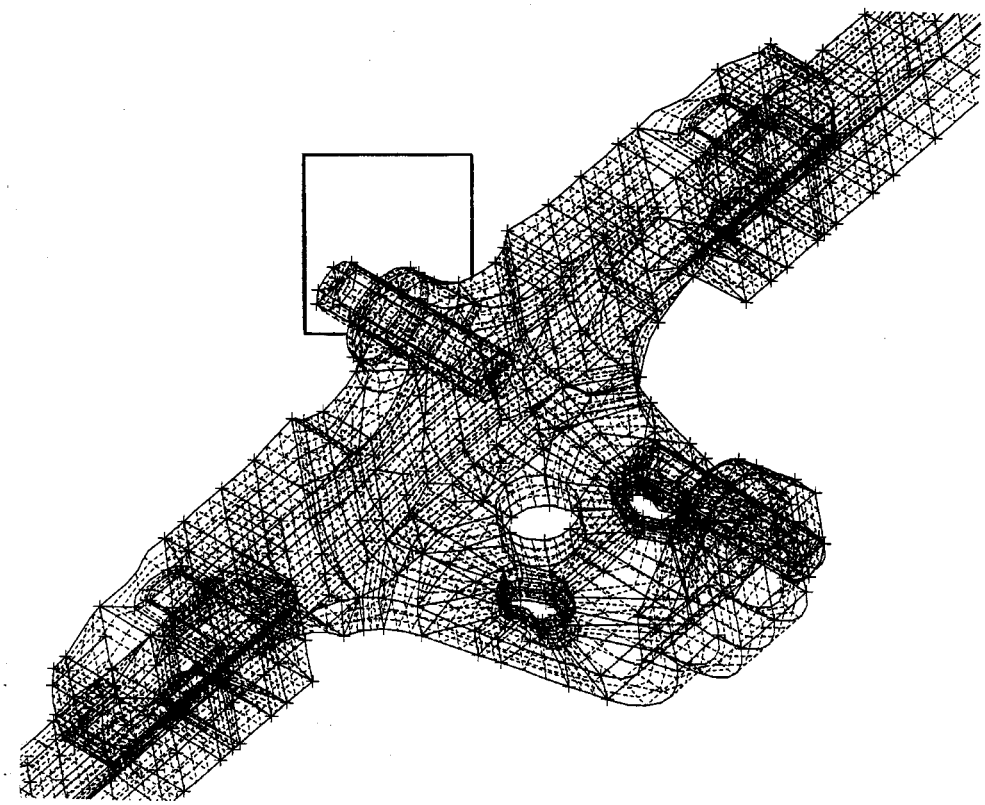

Fig. 3.2.1.2 Zoomed View of the Component (All Entities on Display)
(Box Denotes Area Zoomed for 3.2.1.3)

Fig. 3.2.1.2 represents a zoomed view. At this stage, in order to have a clear view of the surface numbers in view, it is a good idea to turn off all entities except surfaces and eliminate the dashed surface fill, while turning on the surface labels.

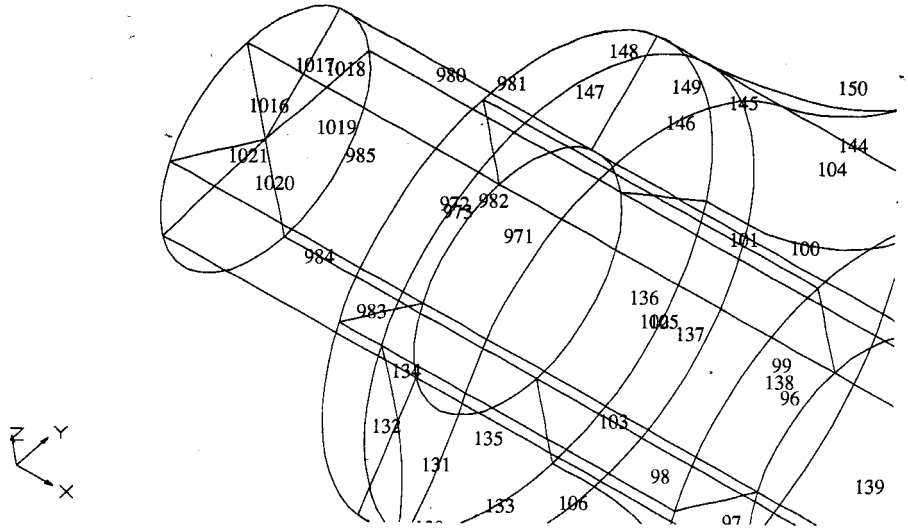

Fig. 3.2.1.3 Further Zoom on the Component
(Entity Points Turned OFF, Surface Fill Turned OFF, Label Surface Turned ON)

Fig. 3.2.1.3 represents this stage in the process. Now, if you desire to perform specific geometric operations on a surface or a group of surfaces and you want to select the surfaces interactively with the digitizer, it is very useful to turn icons ON and click the digitizer on the icon to select one desired surface. Specific surfaces can also be highlighted before proceeding for any geometric operations. The above example demonstrates some strategies used to efficiently identify entities in a particularly *crowded* display.

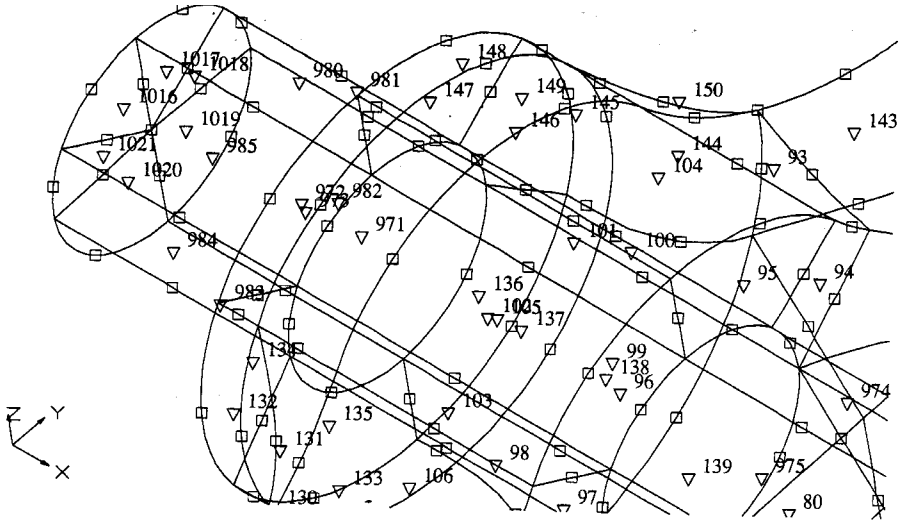

Fig. 3.2.1.4 Same View as 3.2.3 with Icons Turned ON

□ Icon for Lines ▽ Icon for Surfaces

3.3 COORDINATE FRAME

The COORDINATE FRAME option allows you to use various types of coordinate frames in defining the geometry, to create new frames by translating or rotating existing ones, to delete frames from the database and to specify active coordinate frames when more than one coordinate frame is used.

3.3.1 ACTIVE

This option is used when more than one coordinate frame is utilized in the geometric definition of an object. If only one coordinate frame is used, it is not necessary to specify an active coordinate frame.

NOTE: The default display flag for coordinate frames is OFF. In order to display the coordinate frame, it is necessary to set ENTITY⇒COORDINATE-FRAME ON. The coordinate frame should not be confused with the *triad*, which is a different entity, and is always on display (unless set OFF in ENTITY⇒TRIAD) at the lower left corner of the BESTVIEW graphics window.

```
Enter the active coordinate frame >
default: 0)
```

An integer quantity denoting the COORDINATE FRAME number is expected here.

3.3.2 CARTESIAN

The CARTESIAN option allows you to define a local cartesian coordinate system. All entities defined henceforth will then be defined in terms of the local cartesian coordinates until the active coordinate frame is changed.

In order to define a cartesian frame, you must define three points that will completely define the frame. Once you successfully create a CARTESIAN frame, it becomes active and appears on display.

NOTE: The default display and label flags for all active frames are OFF. Hence the appropriate options in DISPLAY-OPTIONS⇒ENTITY and DISPLAY-OPTIONS⇒ LABEL must be set *ON* when desired.

```
Enter the reference frame number
(default: 1)
```

Specify an integer quantity ID for the new reference frame.

Enter the origin of the new frame (x, y, z)

Specify three real values denoting the origin of the new frame.

Enter a point along the x axis of the new frame

Specify the three coordinates for a point on the x axis.

Enter a point on the xy plane of the new frame

Specify the coordinates of a point on the xy plane.

NOTE: If the DIGITIZER is ON at any stage in the above process, you will be asked to detect the corresponding point on the screen instead of specifying the coordinates.

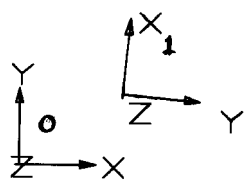

Fig. 3.3.1.2.1 Cartesian Frame 1 Generated From Frame 0

3.3.3 CYLINDRICAL

This option allows you to define a local cylindrical coordinate system. Once you have selected this option, all the subsequently defined points are defined with respect to local cylindrical coordinates until the active coordinate frame is changed.

As in the case of the CARTESIAN option, you must specify three points that define the new coordinate frame.

> Enter the reference frame number.
> Enter the origin of the new coordinate frame (x, y, z)
> Enter a point on the R axis of the new frame (x, y, z)
> Enter a point on the RZ plane of the new frame (x, y, z)

In the above sequence, you must specify the ID of the new reference frame, the coordinates of the origin of the new frame and the coordinates of two points; one along the R axis and one on the RZ plane of the new coordinate frame. This completely defines the new coordinate frame.

<u>NOTE</u>: If the digitizer is ON, you will be asked to click the above points on the screen rather than to give the explicit coordinates.

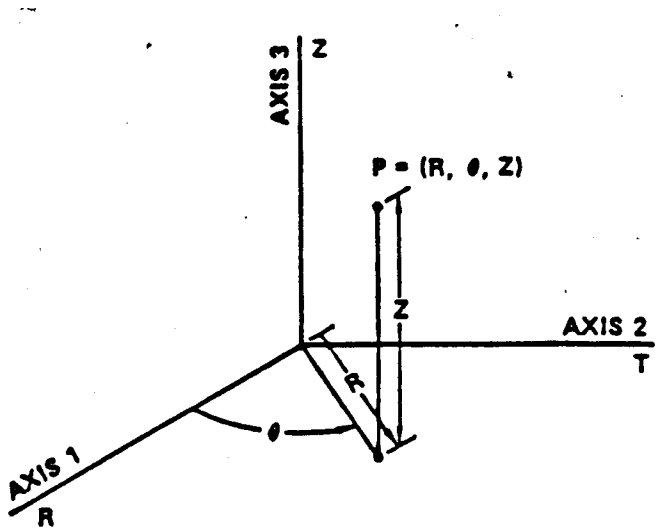

Fig. 3.3.1.3.1 The Cylindrical Coordinate Frame

3.3.4 DELETE

The DELETE option lets you delete a specific coordinate frame from the database. You must be careful when you delete a coordinate frame because this will affect the entities which were defined while the frame was active. The entities which were previously defined with respect to the deleted frame are transformed into global coordinates.

Enter coordinate frame numbers to be deleted.

Specify the particular coordinate frame number(s) to be deleted.

3.3.5 ROTATE

The ROTATE option creates a new local coordinate frame by rotation about the active frame. The rotation is always performed first around the x axis, then the y axis and finally about the z axis. All the rotations are based on the active cartesian coordinates.

Enter the reference frame number to rotate.

Specify the ID of the reference frame which is to be rotated.

Enter the new reference frame number.

Specify the ID of the new reference frame.

Enter the rotation (x, y, z)

Specify the rotation with respect to the active coordinate axes directions.

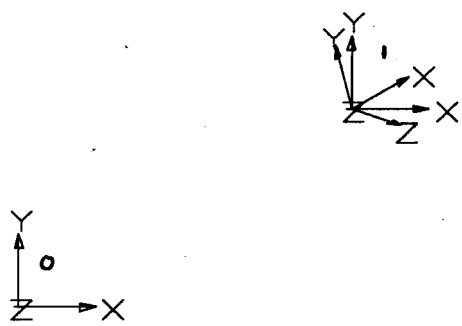

Fig. 3.3.1.5.1 Frame 1 Created by Rotation about 0

3.3.6 SPHERICAL

The SPHERICAL option allows you to define a local spherical coordinate system. All the points that you define after invoking this option will be in spherical coordinates until the active coordinate frame is changed.

In order to define a spherical coordinate system, you must define three points which completely specify the frame.

> Enter the reference frame number.
> Enter the origin of the new frame (x, y, z)
> Enter a point along the R axis of the new frame (x, y, z)
> Enter a point in the R-theta plane of the new frame (x, y, z)

Specify the new reference frame number, the coordinates of the origin of this frame and the coordinates of two points, one on the R axis of the new frame and one on the R-theta plane of the new frame.

NOTE: If the DIGITIZER is ON when this command is invoked, you will have to click the corresponding points instead of specifying the points as described above.

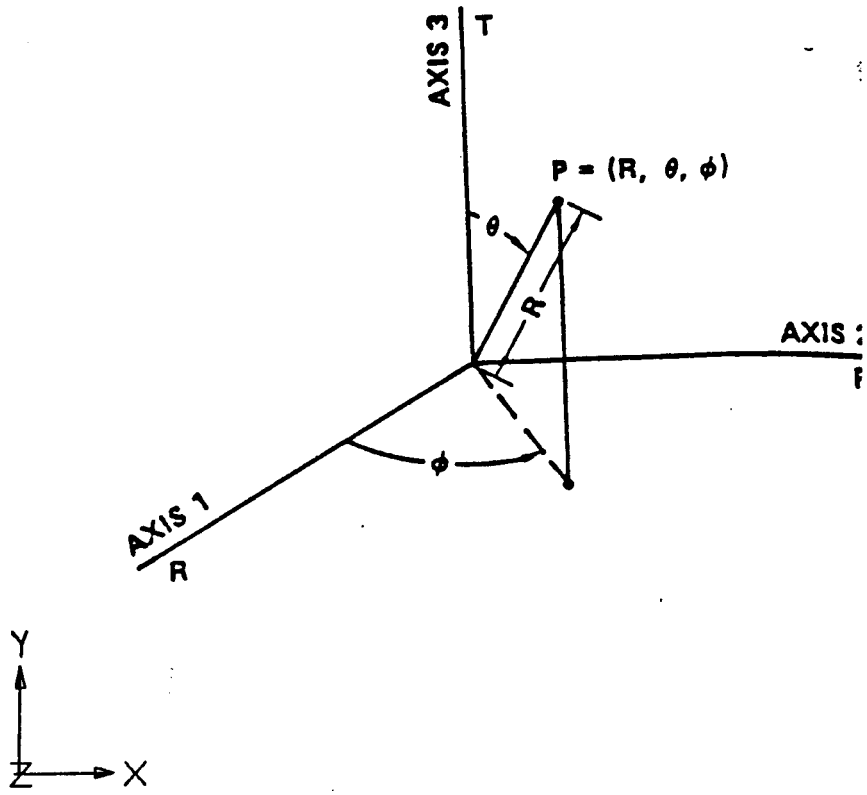

Fig. 3.3.1.6.1 Spherical Coordinate System

3.3.7 TRANSLATE

The TRANSLATE option allows you to create a new local coordinate system by translating the current coordinate frame. The translations are always based on the coordinate frame being translated. Translations are always performed with respect to active Cartesian coordinates.

> Enter the reference frame number to translate.
> Enter the new reference frame number
> Enter the translation (x, y, z)

You must first specify the ID of the reference frame which is to be translated, then the ID of the new reference frame and finally, the translation along x, y, z *based on the active coordinate frame*.

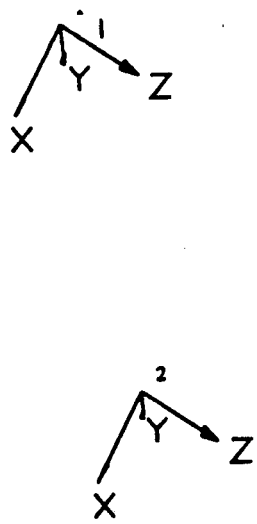

Fig.3.3.1.7.1 Translation Option

<u>NOTE</u>: Although the active frame is #0, translations are taken with respect to the frame #1 (which is being translated).

3.4 INTERSECTION

The INTERSECTION option allows you to automatically generate intersection of lines/surfaces, when required in the modeling process. The corresponding points/lines of intersection are automatically generated and stored in the database. Hence you can perform any other geometric transformations on these generated entities to create lines/patches.

NOTE: The line of intersection of two surfaces is stored internally as a COMPLEX LINE.

3.4.1 LINE

The LINE option allows the generation of the point(s) of intersection of two lines and that of a line with a surface.

3.4.1.1 LINE OPTION

This option generates the points of intersection of two lines. Multiple intersection points can occur depending on the geometrical definitions. You can select the LINES to be intersected either with the digitizer or manually.

```
Enter starting point number
Enter intersecting line numbers
```

Specify a starting point ID for the points to be generated and the two intersecting line numbers. BESTVIEW starts numbering the generated points from the ID which you have specified.

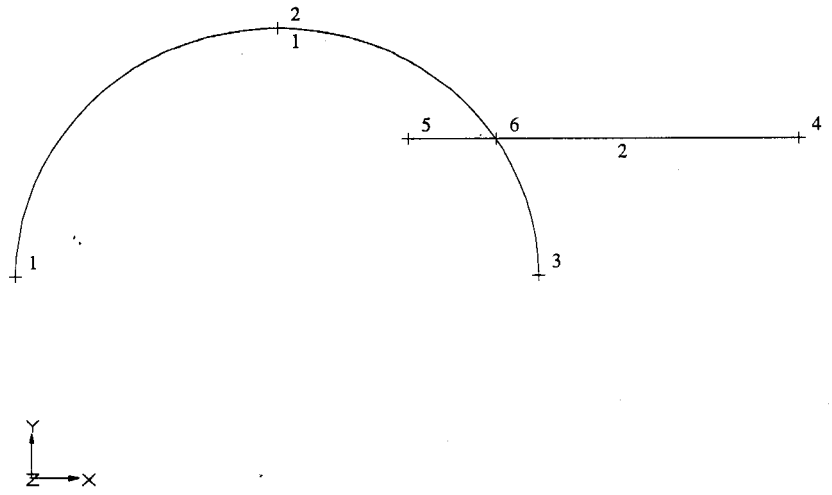

Fig. 3.4.1.1.1 Lines 1 and 2 are Intersected to Create Point 6

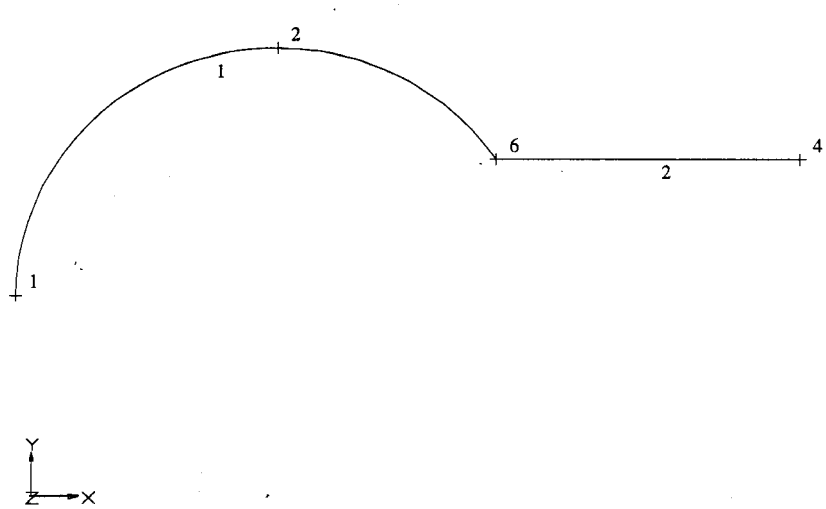

Fig. 3.4.1.1.2 Lines 2 and 1 are broken using BREAK, spurious lines deleted using DELETE to create the above geometry from fig. 3.4.1.1.1

3.4.1.2 SURFACE

This option generates the points of intersection of a line and a surface. Multiple intersection points may be present, depending on the entities. You can select the entities to be intersected either interactively with the digitizer or manually.

```
Enter starting point number
Enter line number
Enter surface number
```

Specify a starting point ID for the points to be generated and the IDs of the line and the surface which are to be intersected.

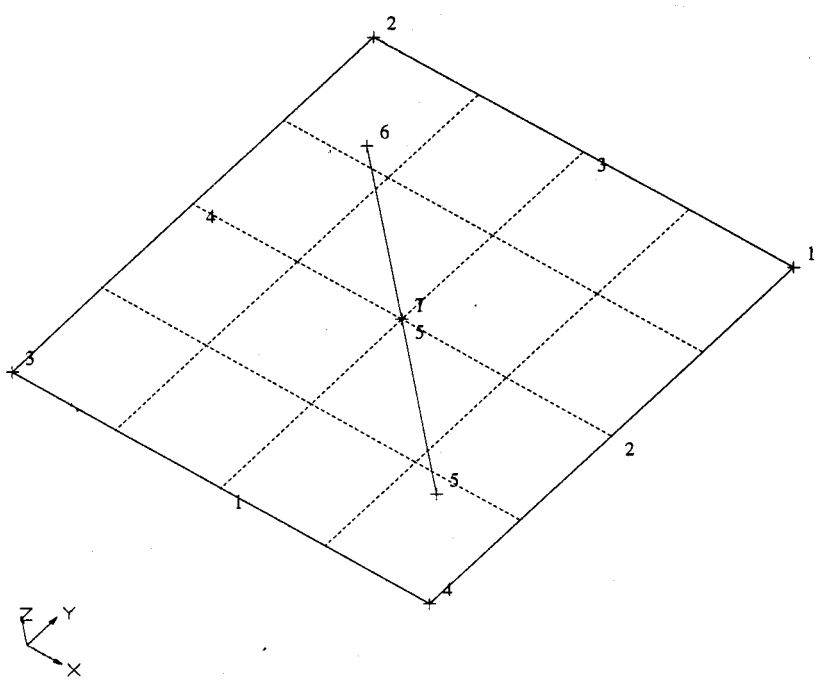

Fig. 3.4.1.2.1 Point 7 Generated by Intersecting Line 5 with Surface 1

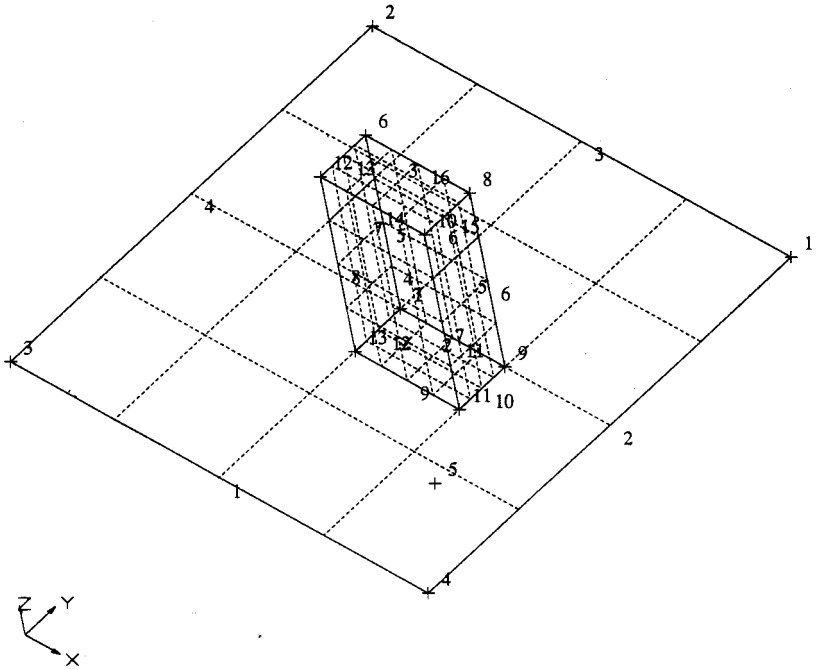

Fig. 3.4.1.2.2 Practical Geometry Generated from 3.4.1.2.1 after Breaking Lines using BREAK, thus creating new lines and surfaces

3.4.2 SURFACE

The SURFACE option generates the lines of intersection of two surfaces. Multiple intersections may occur depending on the entities. The SURFACE-SURFACE intersection may generate third order parametric lines which are merged into one COMPLEX line and stored in the database.

```
Enter starting line number
Enter intersecting surface numbers
```

Specify starting line ID for the generated lines and the IDs of the two surfaces which are to be intersected.

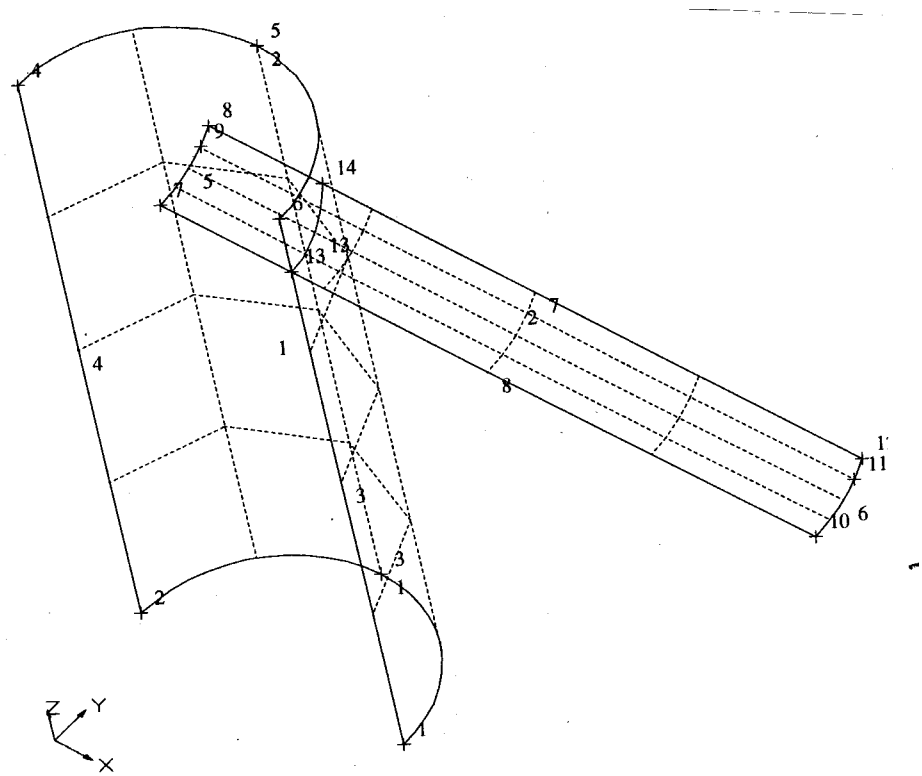

Fig. 3.4.2.1 Surfaces 1 and 2 are Intersected to Create Line 13

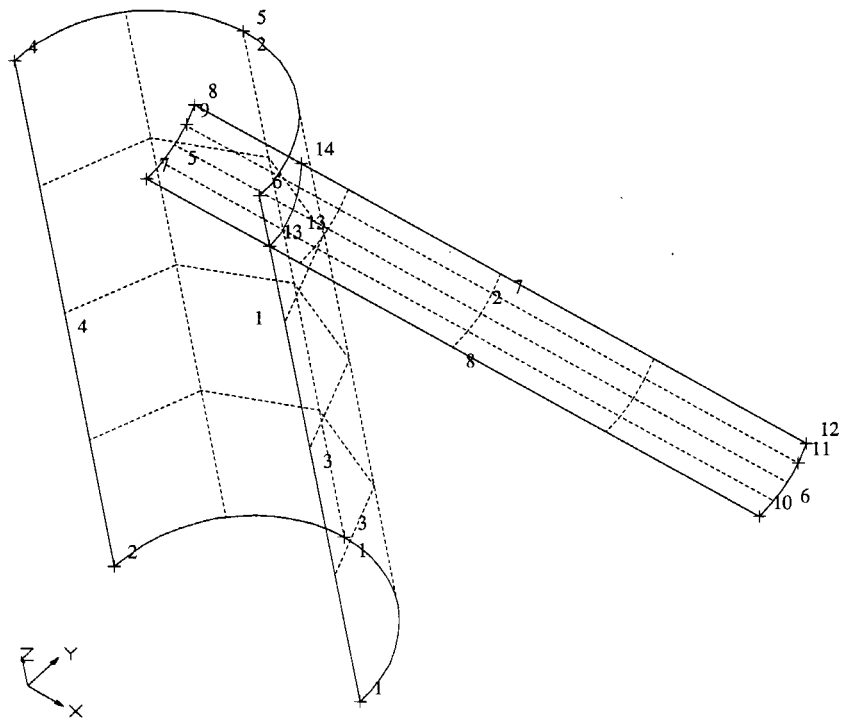

Fig. 3.4.2.2 Surface and Line Definitions Altered using SURFACE ⇒ DELETE and LINE ⇒ BREAK, LINE ⇒ DELETE to generate the above joint from 3.4.1.2.1

3.5 LINE

The LINE option allows you to create a variety of lines (arcs, conics, splines), perform geometric transformations on existing lines to create new ones and delete specific lines from the database. Sophisticated features like the least squares fit line for a group of points, fillet lines for blending transitions in a real geometry and smoothing of higher order lines are also available for your use in the creation of the geometry.

3.5.1 ARC

The ARC option allows you to create an arc from three existing points. The points can either be input manually or selected using a digitizer.

```
Enter new line number
Enter points on ARC (BEGIN, MIDDLE, END)
```

Specify the ID of the arc to be created and the three points which are to lie on the arc in a natural order.

3.5.2 BREAK

The BREAK option lets you divide an existing line into two, at or about the point you specify. The point on/near which the line is to be divided need not lie on the parent line. The first new line created will then be from the parametric distance $t = 0$ to the point you specified and the second one is defined from that point to the end of the line.

NOTE: The divided lines are always stored in the database as PARAMETRIC lines. You may choose to redefine them if they happen to be parts of a straight line or an arc.

```
Enter new line number
Enter line number to break
Enter Coordinates ON/NEAR line
```

If you use the digitizer, you can select the line to be broken and click the point at which you wish to break the line.

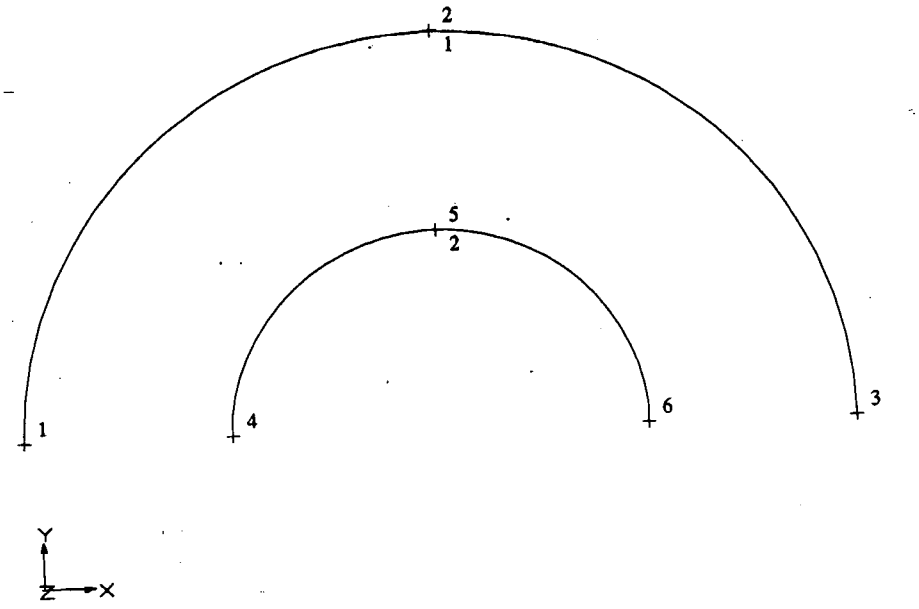

Fig. 3.5.2.1 The Lines 1 and 2 Before They Are Broken

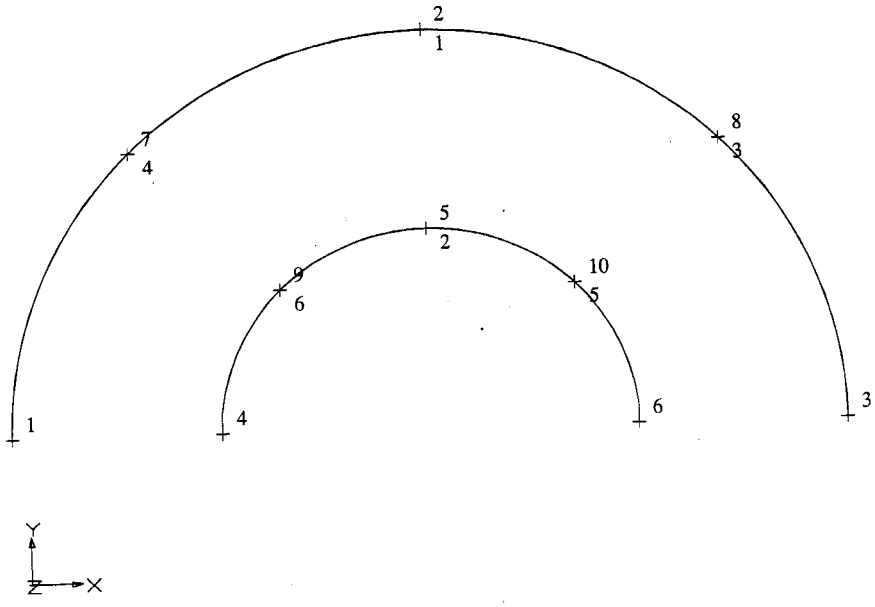

Fig. 3.5.2.2 Lines 1 and 2 After Being Broken

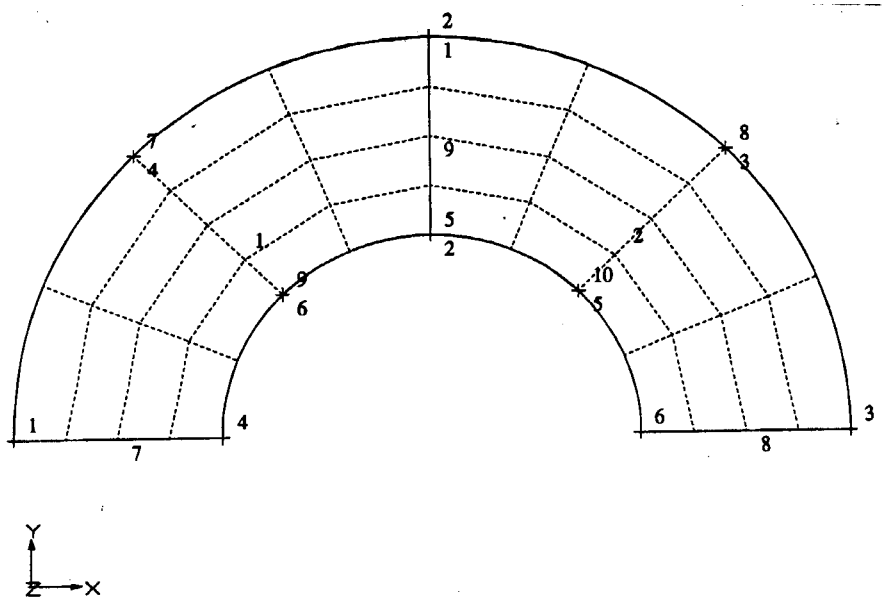

Fig. 3.5.2.3 You May Have Wanted to Define These Patches From the Broken Lines

3.5.3 CONIC

The CONIC option creates an ellipse, a hyperbola or a parabola from two end points and a third point, which defines the plane and tangency for the conic. A relative altitude determines the type of the conic line. If it is less than 0.5, an ellipse is created; if equal to 0.5, a parabola is created, or else a hyperbola is created. The relative altitude is defined as the ratio of the greatest perpendicular distance from the baseline (i.e., the line connecting the two endpoints) to the conic and the baseline to the third point.

```
Enter new line number
Enter Conic points (BEGIN INTERMEDIATE, END)
Enter relative altitude
```

Specify the line number of the conic to be created, the conic points and the relative altitude.

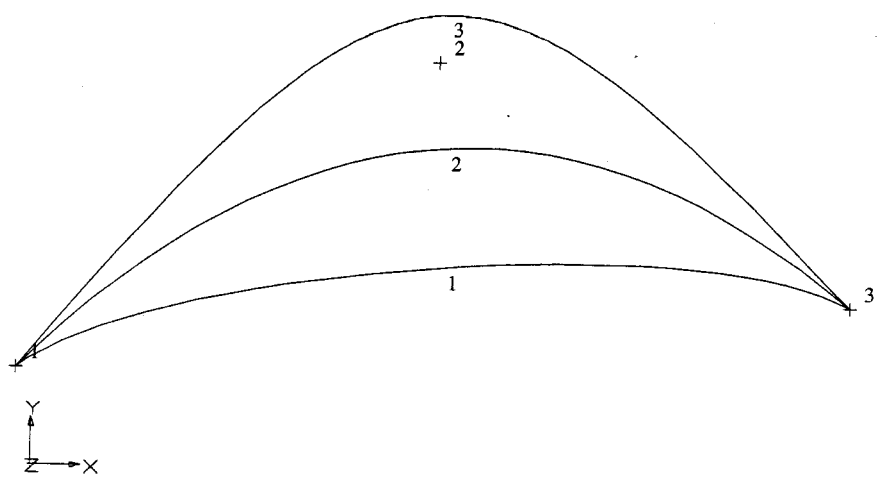

Fig. 3.5.3.1 Conics Created Using Different Relative Altitudes

3.5.4 CUBIC

The CUBIC option allows you to create a cubic line through four points. The points can either be input manually or selected using the digitizer.

```
Enter new line number
Enter four point numbers on line
```

Specify the ID for the cubic line and the four points which must lie on it in a natural order.

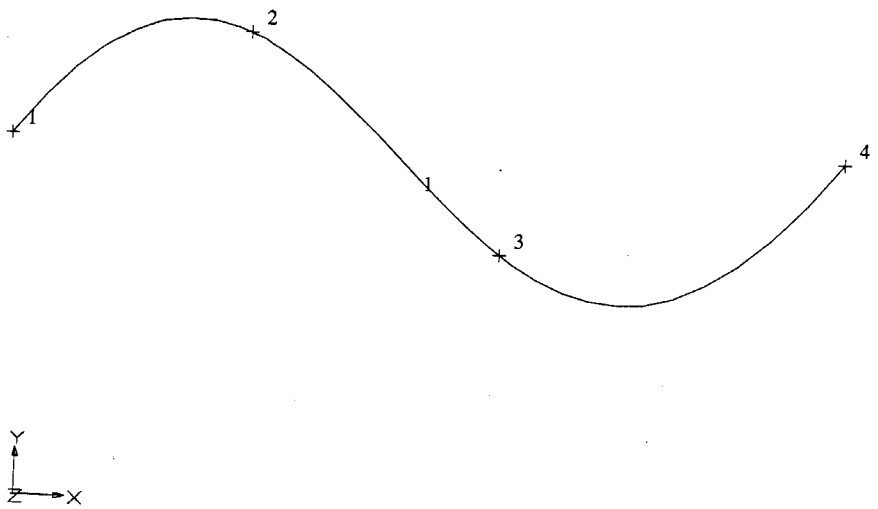

Fig. 3.5.4.1 A Cubic Line Generated Through Four Specified Points

3.5.5 DELETE

The DELETE option deletes a line or a range of lines from the database. You have the option to delete points associated with the line to be deleted.

If you wish to delete a merged (complex) line from the database and you select the option of deleting points associated with the merged line, all the lines associated with the merged line are automatically deleted. Generally, it is recommended that you delete a COMPLEX line by inputing its ID through the keyboard rather than by selecting it through the digitizer (i.e. SET-DIGITIZER as OFF).

```
Enter beginning and ending line numbers (# to quit)
Delete the points associated to line(s)
(default: NO)
Delete lines associated with this merged line
(default: NO)
```

Specify the line number you wish to delete from the database. If you wish to delete the points associated with the line, you will not be prompted as to whether you wish to delete the lines associated with one merged line.

3.5.6 ENTER

The ENTER option enables you to create a straight line between two end points. You can continue creating straight lines until you select the ESCAPE (cancel) option to leave the input mode.

```
Enter new line number
Enter BEGIN, END point numbers
```

You can also select the begin and end points using the digitizer.

3.5.7 EQUATION

The EQUATION option lets you create particular lines, with known parametric coefficients in the active coordinate directions. You need to specify a total of 12 parametric coefficients consecutively, wherein the first four coefficients represent the x variation of the parametric line, the next four describing the y variation and the final four coefficients describing the z variation. Creation of a line using the EQUATION option automatically generates the two end points of the line in the database.

```
Enter new line number
Enter parametric coefficients of line (12 coefficients)
Enter coefficients (4 per row)
Row 1 (4 real values expected)
Row 2 (4 real values expected)
Row 3 (4 real values expected)
```

For instance, if you specified the rows as:

$$\begin{array}{lcrrrr} \text{Row 1} & > & 0 & 0 & 5 & 0 \\ \text{Row 2} & > & -10 & 10 & 10 & 0 \\ \text{Row 3} & > & 0 & 0 & 0 & 0 \end{array}$$

You are generating a line with the equation

$$\begin{aligned} x(t) &= 0.0t^3 + 0.0t^2 + 5t + 0 \\ y(t) &= -10t^3 + 10t^2 + 10t + 0 \\ z(t) &= 0.0t^3 + 0.0t^2 + 0.0t + 0 \end{aligned}$$

3.5.8 EXTEND

The EXTEND option extends a line in a direction tangent to its endpoint to the specified distance. The new line is stored as a merged line consisting of the original line and the extended segment.

NOTE: In order to locate the beginning of a line, you can use DISPLAY⇒LABEL⇒ PARAMETRIC DIR.

```
Enter new line number
Enter line number to extend
Extend beginning or end of line
BEG      END
Enter distance
```

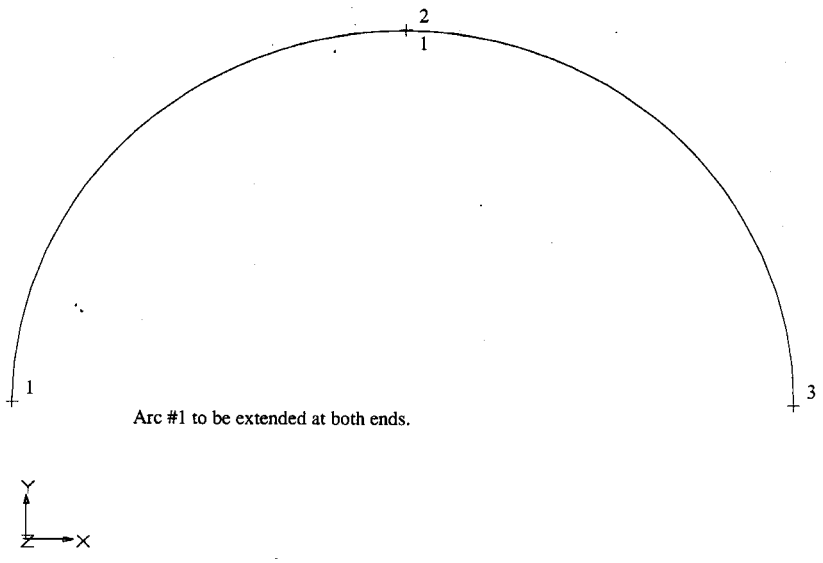

Fig. 3.5.8.1 Line to be Extended at the Endpoints

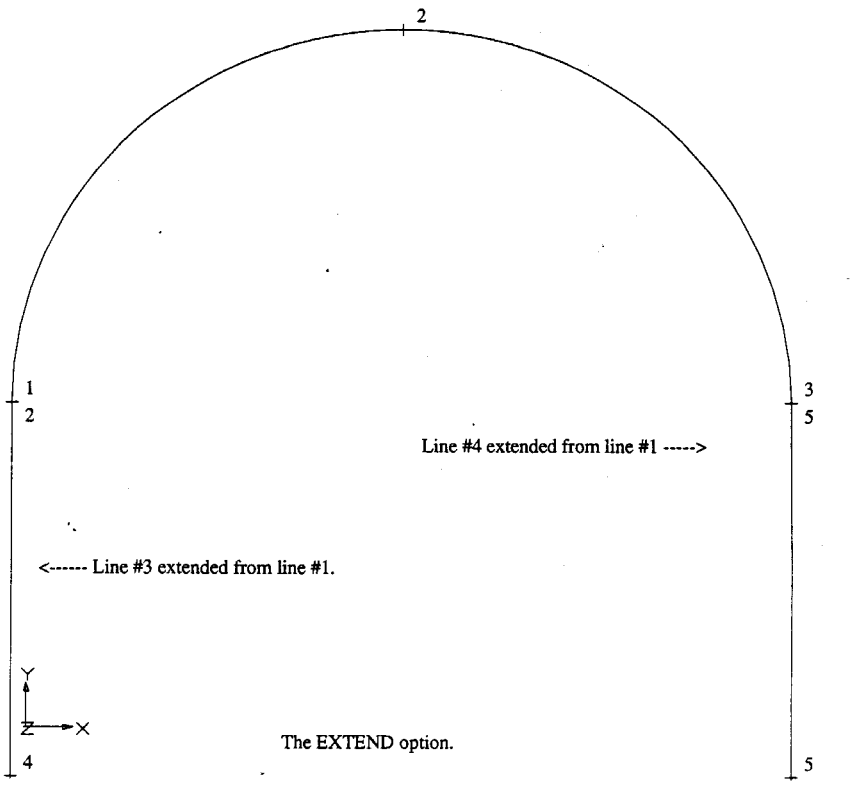

Fig. 3.5.8.2 EXTEND Creates Merged Lines (Lines 2 and 5)

3.5.9 FILLET

A fillet is defined by BESTVIEW as a 3-point ARC which passes tangentially to the lines between which the fillet is defined. You can define fillets between the following line types:

a. Straight lines.
b. Component lines of a spline (not the original spline, which is a complex line defined in terms of these component lines).
c. Cubic lines.
d. Quadratic lines.

```
Detect 2 lines to round ((e) exit, (a) abort, (k) keyboard)
```

After you have given the 2 lines between which the fillet is to be defined:

```
Click near free end of 1 line
(p) detect a point, (n) detect a node
```

You may select any position near the free end or press p and select the point at the free end required. The first choice would give an approximate location, whereas the second choice would give the location of the point selected. As far as the option goes, there is basically no difference for all ordinary fillet definitions. A similar query will be asked for the second line:

```
Click near free end of 2 lines
(p) detect a point, (n) detect a node
```

Now the system requires information about the fillet size:

```
Give fillet radius:
```

If you are experimenting with a value which does not make proper sense, you might end up getting an unwanted response. We show here a set of examples to illustrate where the fillet would be generated, based on the lines you click and the free ends you declare:

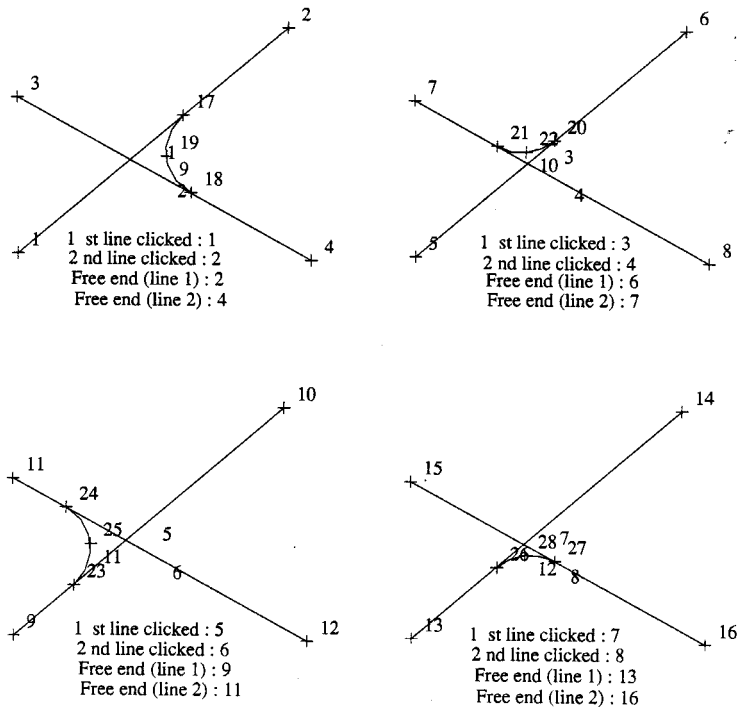

Fig. 3.5.9.1 Different FILLET Options

You cannot get a fillet when one of the lines chosen is an ARC. But we show here how to generate the required figure if you are working with arcs. The following steps are to be noted:

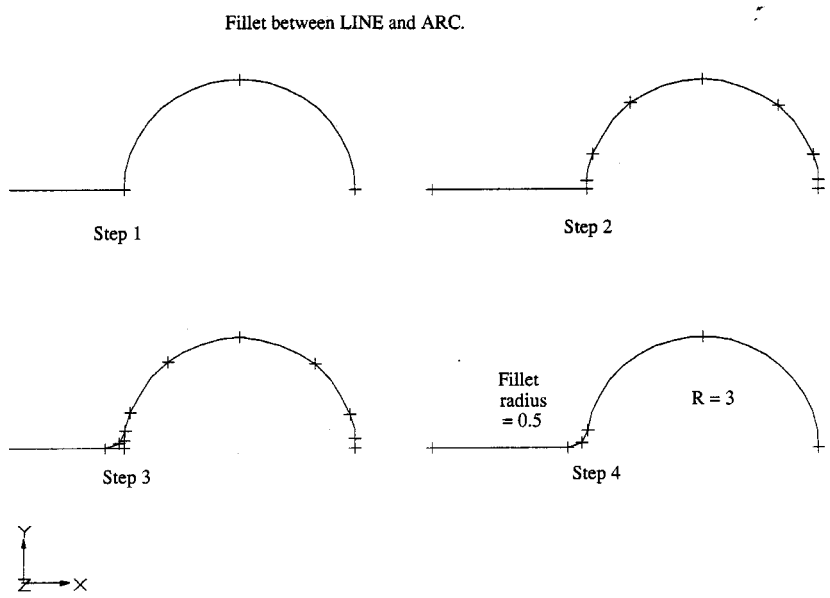

Fig. 3.5.9.2 Indirect Way to Deal With ARC

Step 1: For example, if you want a fillet (rad. = 0.5) between a straight line and an arc (rad. = 3).

Step 2: With the SET DIGITIZER *ON* , define a few points on the displayed ARC. Then DELETE the ARC, without deleting the points. Now pass a SPLINE through all the points (which were there in the definition of the ARC, as well as those you have defined just now). Then DELETE the SPLINE without deleting the points and lines merged with it. If you issue a DRAW/CDRAW, the component lines of the deleted SPLINE will be visible on the screen.

Step 3: Now select the FILLET option. For the two lines to be declared, choose the straight line and any component line (of the SPLINE) where you think the fillet will pass. (In fact, the first or second line segment from the end of the straight line, meeting the curve, will suffice). Click the proper free ends and declare the fillet radius. The required fillet will be produced.

Step 4: BREAK the straight line at the point where it meets the fillet and DELETE the original line and the unwanted extension. Now DELETE all the component lines resembling the ARC. Also DELETE all the points associated with those component lines. Define an ARC between the other end (with the one on the straight line) of the fillet (which is also a 3 point ARC) and the two other points defining the original ARC.

3.5.10 LEAST SQUARES

The LEAST SQUARES option generates a line that is the best linear, least square fit through the input points. A maximum of 40 data points can be entered. You can select the data points manually or through the digitizer.

```
Enter new line number
Enter point numbers
```

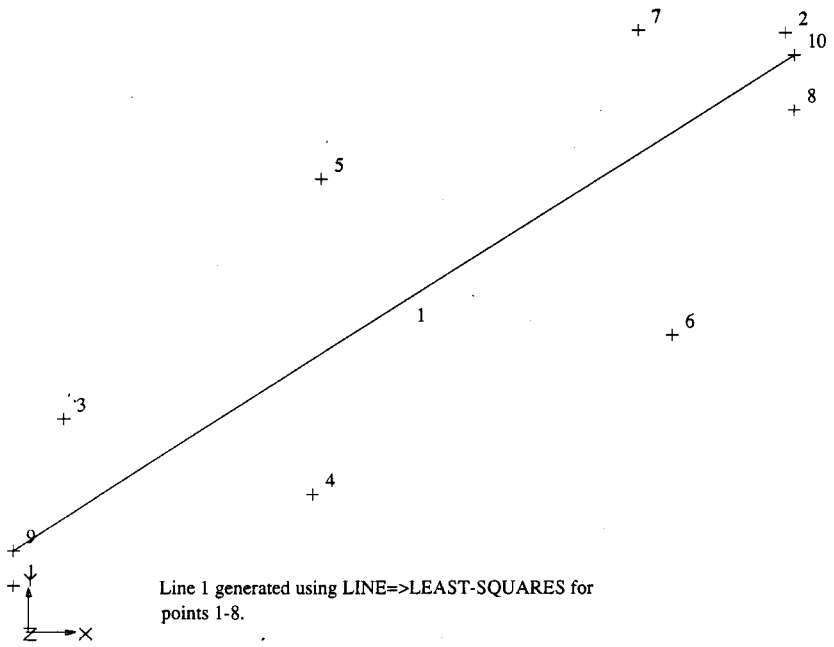

Fig. 3.5.10.1 Line Generated Using LEAST-SQUARES Option

3.5.11 MERGE

This option allows you to combine different lines into a merged (complex) line. You must make sure that the different lines do indeed connect into one meaningful line. Also, merging of lines does not smooth off the endpoints. It is only meant as a means of representation of lines, so that you can define patches based on a combination of simple lines. You should try to perform all operations on MERGED lines with the keyboard (i.e., SET-DIGITIZER OFF).

```
Enter the new line number
Enter the line numbers to be MERGED into a single line
```

Specify the line ID of the merged line and the IDs of the individual lines which are to be merged.

3.5.12 MIRROR

The MIRROR option creates a new line by mirroring an existing line about one of the three standard coordinate planes.

```
Enter new line number
Enter line number to be mirrored
Enter MIRROR plane
XY   YZ   ZX
(default: YZ)
```

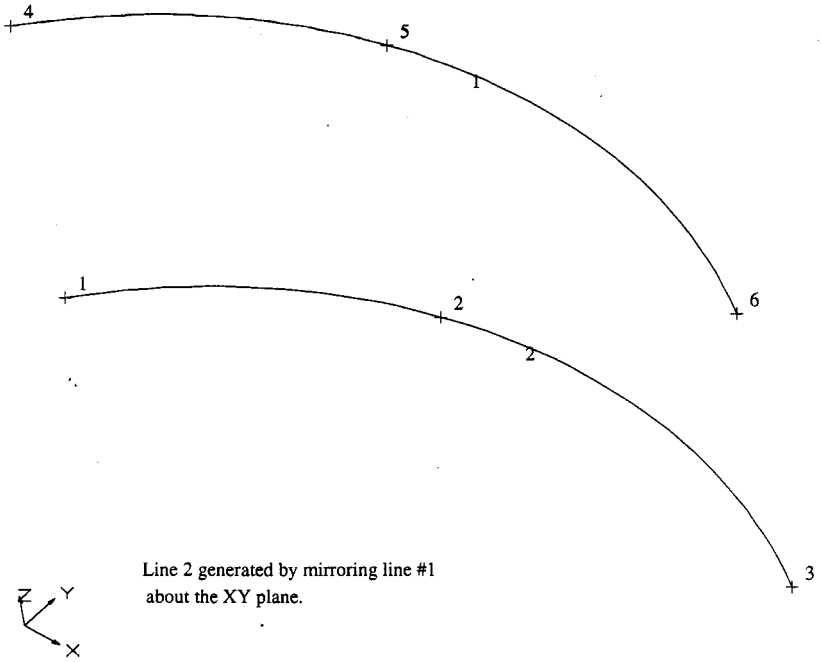

Fig. 3.5.12.1 Line Generated Using LINE⇒MIRROR Option

3.5.13 QUADRATIC

The QUADRATIC option creates a quadratic line through three points.

```
Enter new line number
Enter three points on line
```

Specify the new line number and the three points which are to lie on the quadratic in a natural order.

3.5.14 REVERSE

The REVERSE option inverts the parametric direction of an indicated line. The end of the line, which was previously at $t = 0$, would now be at $t = 1$, and vice-versa. You may choose to use this option, particularly when you want to define a spline, tangent to an existing line. The parametric direction of the existing line will matter in this case.

```
Enter new line number
Enter line number to reverse
```

3.5.15 ROTATE

This option creates new lines by rotating an existing line above the currently active frame. It has the capability to create lines at intermediate (though equally spaced) angles if you specify that more than one line is to be created.

Enter new line number
Enter line number to rotate
Enter rotation angle (x, y, z)
Enter number of new lines

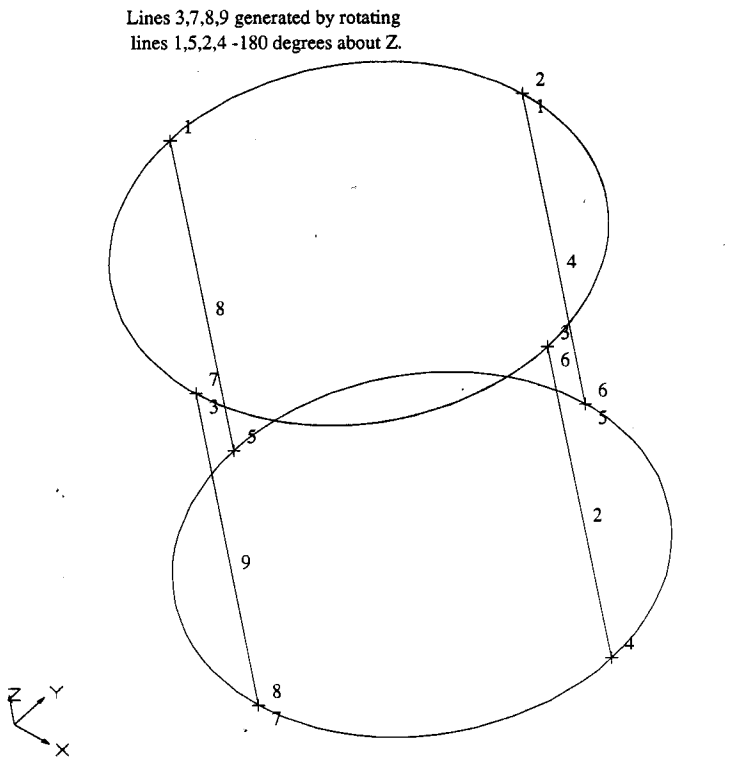

Fig. 3.5.15.1 Figure Generated Using LINE⇒ROTATE Option

3.5.16 SCALE

This option creates a line by scaling an existing line in the local coordinate frame. If the new line number is specified to be the same as the line being scaled, then that reference line is scaled without generating a new line.

```
Enter new line number
Enter line number to scale
Enter scale factors (x, y, z)
```

Specify the ID of the new line to be generated, the ID of the line number to be scaled and three real values which represent the scale factors in the active coordinate directions.

3.5.17 SMOOTH

The smooth option blends the transition between lines so as to ensure first order continuity between them (i.e., the derivatives at the end points of two consecutive lines match). You must ensure that the lines to be smoothed do share a common endpoint and that the parametric directions of the lines involved are consistent.

<u>NOTE</u>: All smoothed lines are stored as parametric lines; and they do not necessarily pass through the intermediate points which were defined prior to the smoothing.

```
  Enter new line number
* Enter the line numbers to be smoothed
```

You can also select the line numbers to be smoothed through the digitizer.

*The SMOOTH option does not operate on a straight line and an arc. Use LINE⇒FILLET to achieve this blending.

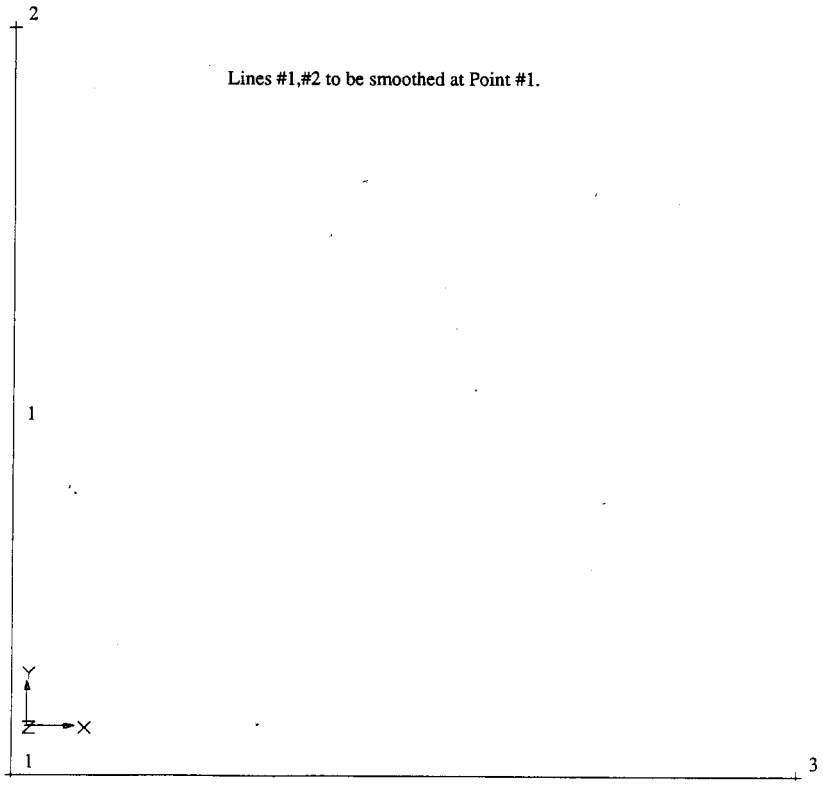

Fig. 3.5.17.1 Example of the Use of SMOOTH Option

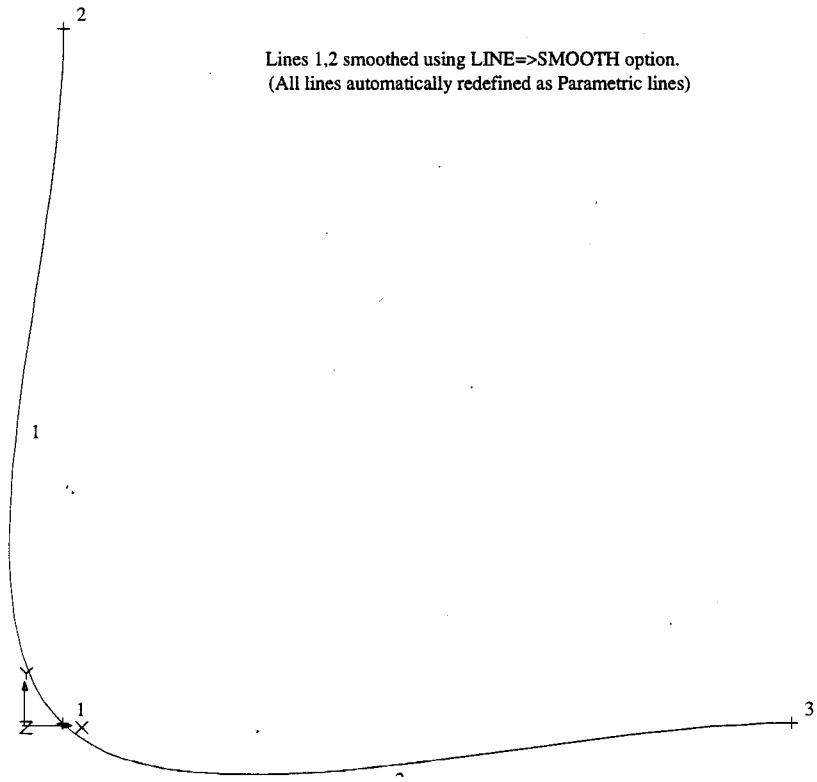

Fig. 3.5.17.2 Smoothed Lines

3.5.18 SPLINE

The SPLINE option allows you to generate a cubic spline through the data points. You can define the ends of the spline to be either free or tangent to an existing line. In the latter case, the parametric directions of the lines dictate the shape of the spline.

NOTE: A spline is internally represented as a complex line comprised of piecewise cubic splines. Hence, in all geometric operations on splines, you are advised to input line IDs manually rather than through the digitizer.

```
Enter new line number
Enter point numbers
Enter end condition at 0
   FREE      TANGENT
Enter tangent line number (for tangent option)
Enter end condition at last point
   FREE      TANGENT
Enter tangent line number
```

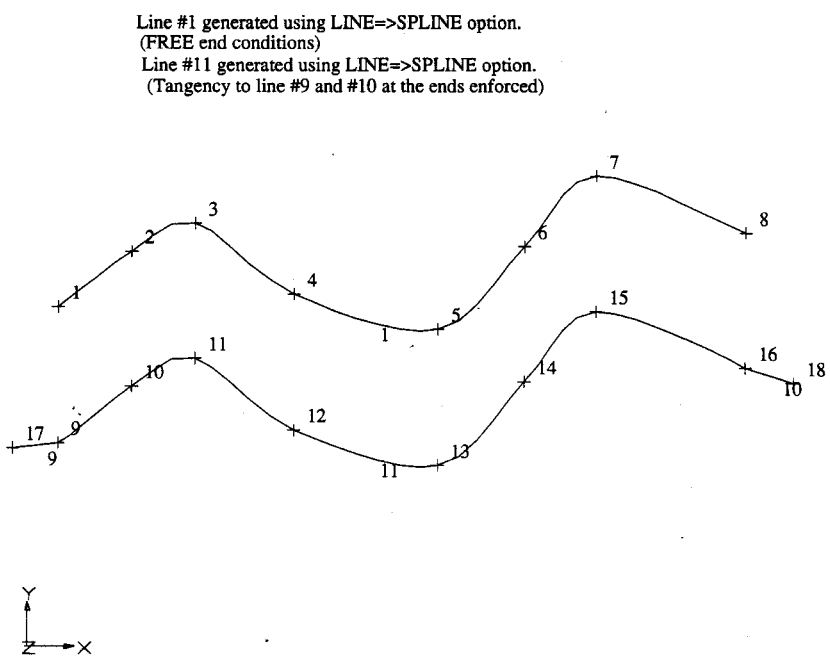

Fig. 3.5.18.1 FREE and TANGENT End Conditions in Defining a Spline

3.5.19 SWEEP

The SWEEP option allows you to create an arc by rotating a point about an axis specified by a line number. The angle is input as DEGREES.

```
Enter new line number
Enter the point number to rotate
Enter line number of axis
Enter angle of rotation
```

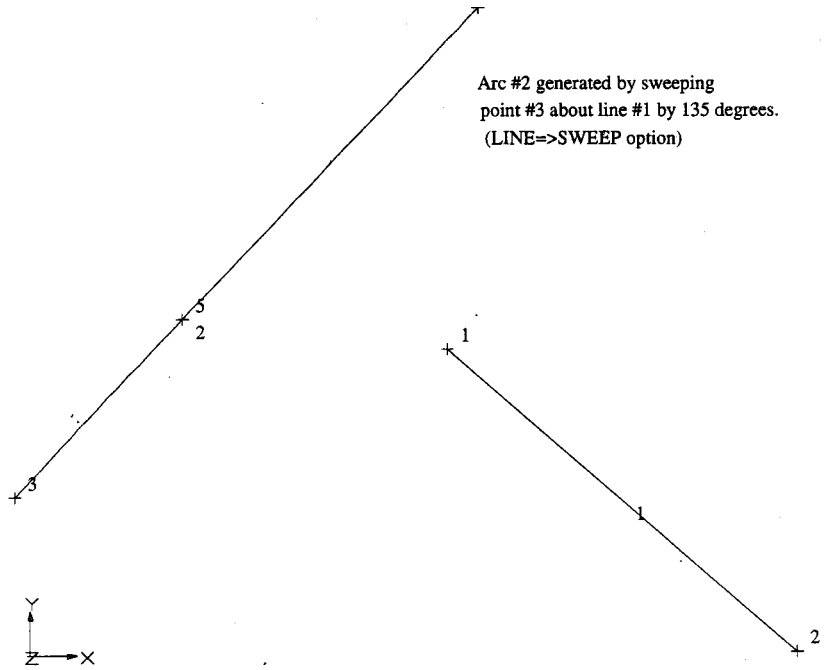

Fig. 3.5.19.1 Example of LINES⇒SWEEP Option

3.5.20 TRANSLATE

The TRANSLATE option creates a line by translating an existing line in the active coordinate directions. If you specify the new line number to be the same as the line being translated, then the reference line is translated without creating an additional line.

Enter new line number
Enter range of line numbers to translate
Enter translation (x, y, z)

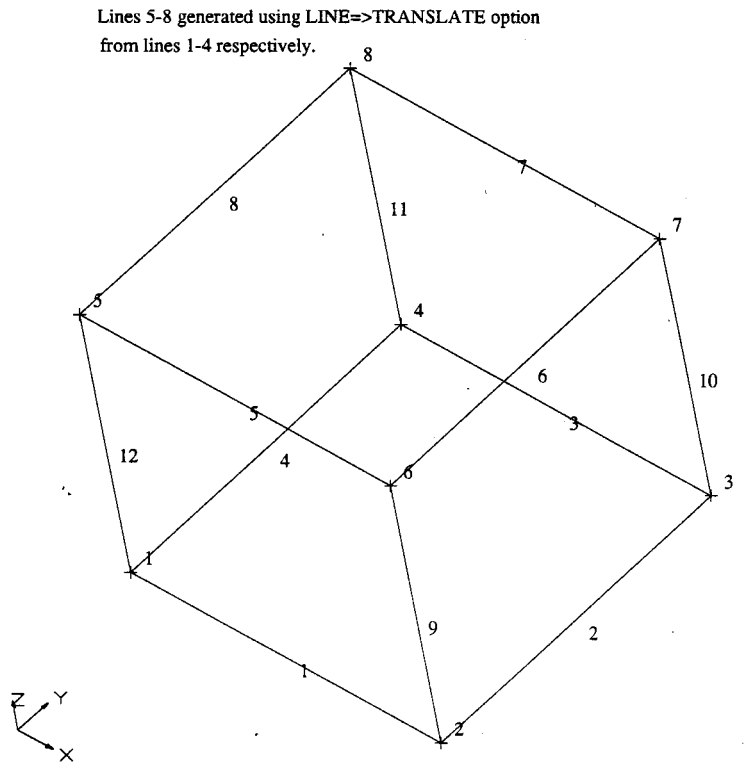

Fig. 3.5.20.1 Figure Generated by Translation of Lines Along z Axis

3.6 POINT

Points are *the* basic entities from which you can create higher entities such as lines and surfaces. The POINT option allows for a variety of methods to create points and subsequently manipulate them. You can create points on existing geometric entities such as lines and surfaces, on nodes and by interpolation on existing points and specified lines.

3.6.1 DELETE

The DELETE option allows you to delete a point or a list of points from the database. The point IDs can either be input manually or selected through the digitizer.

Enter point IDs to delete

Specify the point(s) which are to be deleted from the database.

3.6.2 ENTER

The ENTER option allows you to enter coordinate points, based on the active coordinate frame. The active coordinate frame can be cartesian, cylindrical or spherical.

Enter new point number Enter coordinates of point (x, y, z)

Specify the ID of the new point to be created and the coordinates based on the active frame.

You can also detect the point on the screen using the digitizer.

3.6.3 LINE INTERPOLATE

The LINE-INTERPOLATE option generates intermediate points along a line, with either equal spacing or unequal spacing. In the latter case, the spacing must increase or decrease according to a bias factor. The points can also be generated on the line by using a parameter list where there is no restriction on the spacing.

NOTE: If you opt to generate points using a parameter list, the parameter values corresponding to the beginning and the end of the line are ignored, and intermediate points are created.

```
  Enter new starting point number
  Enter line number
* Enter bias factor (default: 1)
  Enter number of points along line, or
  Enter parametric values of new points (0-1)
```

*The bias factor is defined as the ratio of the spacing of the last two points to the spacing of the first two points along the line.

Specify the ID of the new point to be generated, the ID of the line on which the points are to be interpolated, the bias factor and the number of points or the parametric values of the points, depending on your choice.

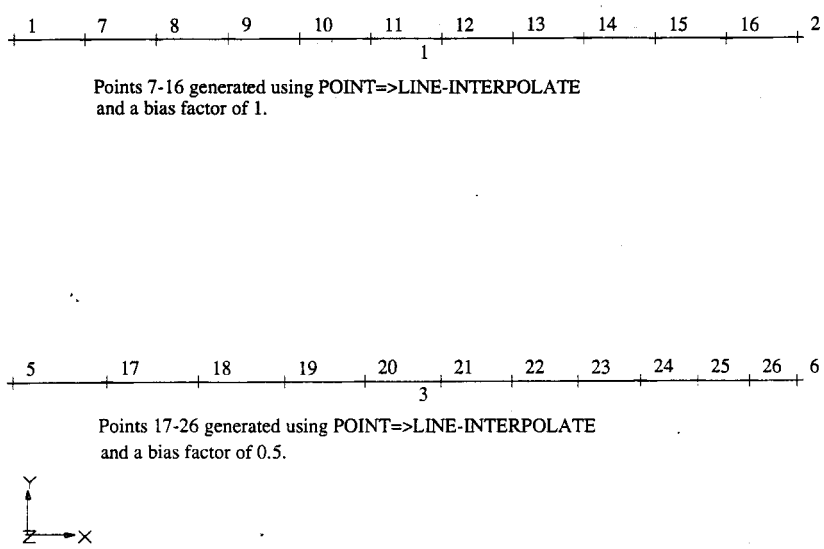

Fig. 3.6.3.1 Points Generated Using Bias Factors of 1 and 0.5, Respectively

3.6.4 MIRROR

The MIRROR option mirrors a point about one of the coordinate planes. You can input the point ID to be mirrored, either manually or automatically, through the digitizer.

```
Enter new point number
Enter point number to mirror
Enter mirror plane
  xy   yz   zx
```

Specify the ID of the new point, the point which is to be mirrored and the mirror plane.

3.6.5 ON LINE

The ON-LINE option creates a point on a line closest to a specified point.

```
Enter new point number
Enter line number
Enter coordinates of point near line (x, y, z)
```

Specify the new point ID, the line ID and the coordinates of the point near the line.

3.6.6 ON NODE

The ON-NODE option creates a point at the location of an existing node. You can either input the node ID manually or select it through the digitizer.

```
Enter new point number
Enter node number
```

3.6.7 ON SURFACE

This option creates a point on the indicated surface closest to the entered point.

```
Enter new point number
Enter surface number
Enter point near surface (x, y, z)
```

Specify the new point ID, the surface ID and the coordinates of the point near the surface.

3.6.8 POINT INTERPOLATE

The POINT-INTERPOLATE option generates new points along a straight line connecting the two specified points. The points thus generated may either be equally spaced or spaced with a uniform bias or placed at random parametric values along the line.

```
  Enter new starting point number
  Enter point numbers (BEGIN, END)
* Enter bias factor
  Enter number of points between points, or
  Enter parametric values of new points (0-1)
```

*The bias factor is defined as the ratio of the spacing of the last two points to that of the first two.

Specify the new point ID, the IDs of the points to be interpolated, the bias factor and the number of points between the two specified points or the parametric values of the new points, depending on your option.

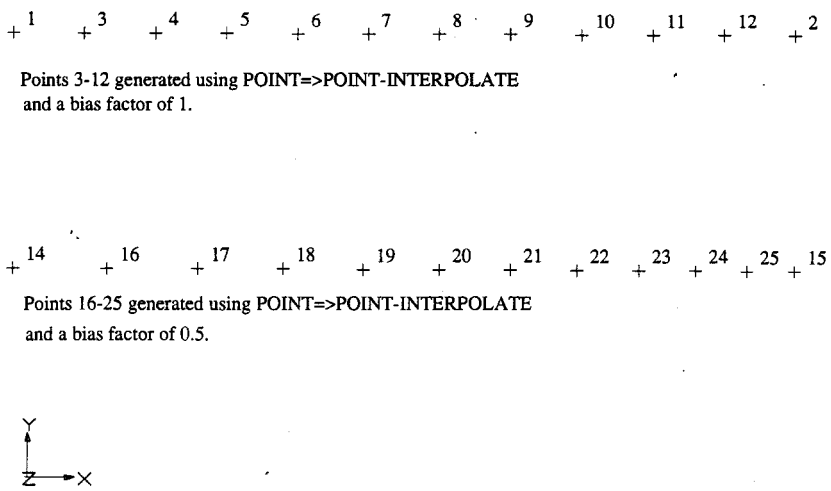

Fig. 3.6.8.1 Points Generated Between Two Points Using Bias Factors 1.0 and 0.5, Respectively

3.6.9 ROTATE

The ROTATE option creates a new point by rotating an existing point about the active frame. You can also create intermediate points at equi-angular intervals if you specify more than one point to be generated.

```
Enter new starting point number
Enter point number to rotate
Enter rotation angle
Enter number of new points
```

Specify the ID of the new point to be generated, the ID of the point to be rotated, the rotation angle and the number of points to be generated.

3.6.10 SCALE

The SCALE option creates a new point by scaling the coordinates of an existing point based on the active coordinate frame.

```
Enter the new point number
Enter the range of point numbers to scale
Enter scale factors (x, y, z)
```

Specify the new point ID, the range of point IDs which are to be scaled and the scale factors in the active coordinate directions.

3.6.11 SURFACE INTERPOLATE

This option generates new points over a surface, either equally spaced or unequally spaced (with a uniform bias) or a random grid of points with specified parametric values.

Enter new starting point number
Enter surface number
Enter bias factors (I, J)
Enter number of points in I direction, or
Enter parametric values in I direction (0-1), or
Enter number of points in J direction, or
Enter parametric values in J direction (0-1)

Specify the starting ID for the new point, the surface ID, the bias factors (I, J) and number of points (I, J) or the parametric values in the (I, J) directions respectively.

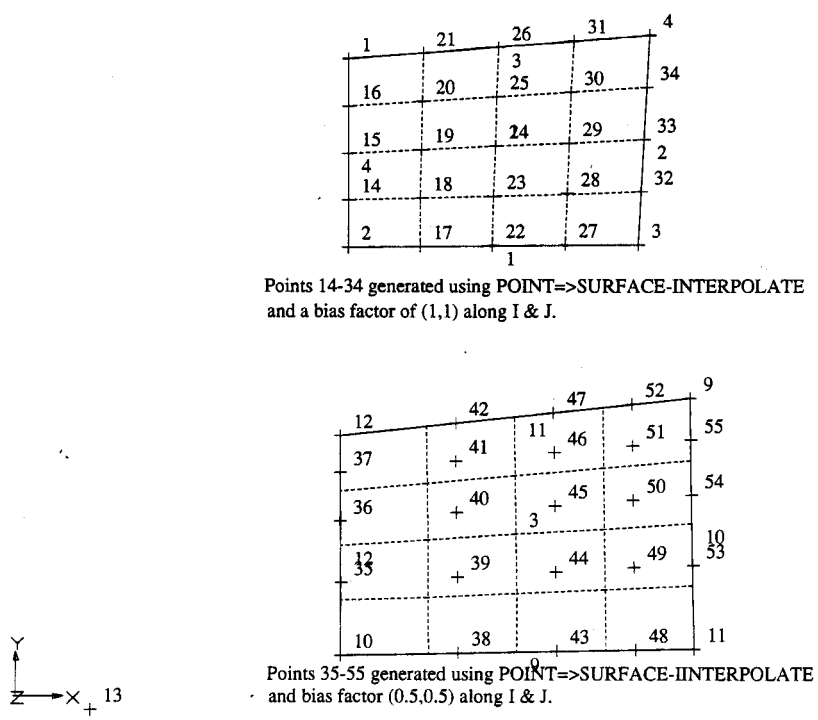

Fig. 3.6.11.1 Points Generated Using SURFACE-INTERPOLATE Option and Bias Factors 1.0 and 0.5, Respectively

3.6.12 TRANSLATE

The TRANSLATE option creates a new point by translating an existing point in the active coordinate directions.

Enter new point number
Enter range of pont numbers to translate
Enter translation (x, y, z)

Specify the ID for the new point, the range of points to be translated and the translation in the active frame directions.

3.6.5 SURFACE

The SURFACE option allows the creation and manipulation of surface entities. We support options to create surfaces from points in a plane from three or four existing lines, break surfaces along specified lines, extrude surfaces from existing lines, create new surfaces from existing ones by geometric transformations and smooth surfaces at corners.

3.7.1 BREAK

The BREAK option divides a surface into two new surfaces along or near a line defined by two points that are on or close to the surface. The first created surface assumes the ID of the parent surface, while the second takes the default ID or the specified ID.

```
Enter new surface number
Enter surface number to break
Enter opposite edges to break
Enter coordinates ON/NEAR first edge
Enter coordinates ON/NEAR second edge
```

Specify the new surface ID, the ID of the surface to be divided, the line IDs along which the surface is broken and the point coordinates near each edge where the surface is to be divided.

Note that you may use the digitizer to perform all the above operations.

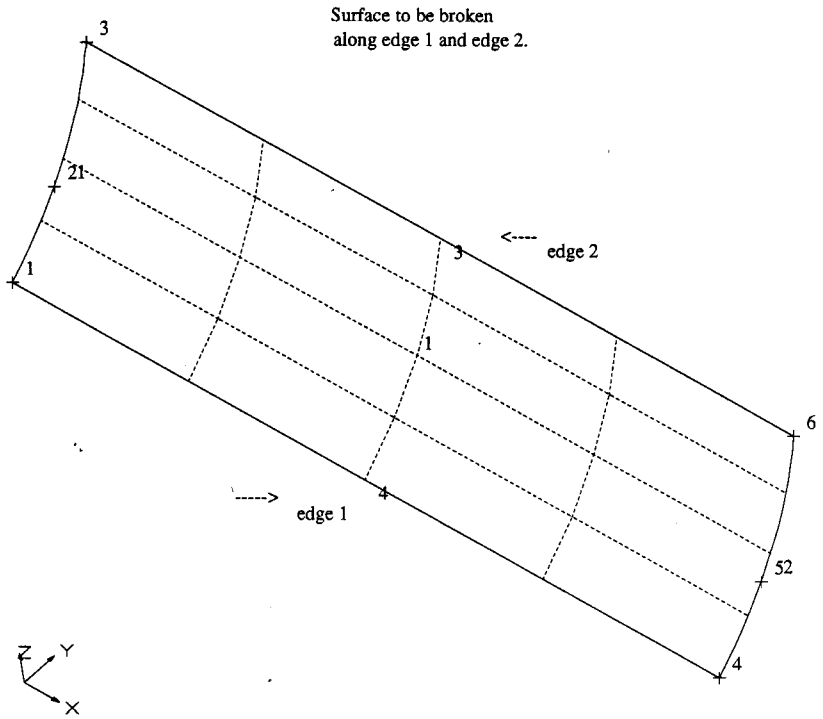

Fig. 3.7.1.1 Surface 1 to be Broken Along Edges 1 and 2

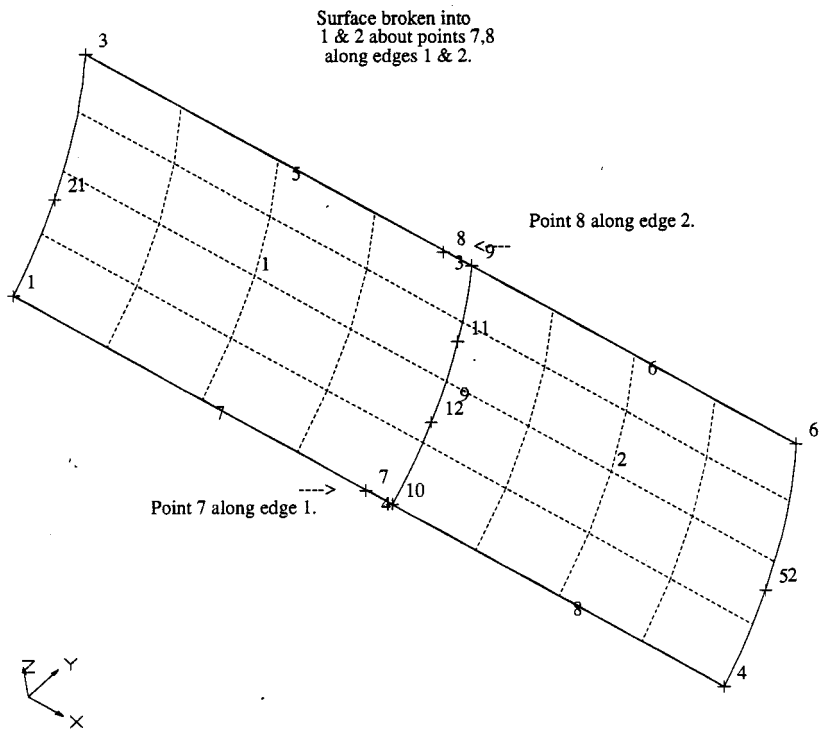

Fig.3.7.1.2 Surfaces 1 and 2 Generated After Breaking 1 Along an Edge About Points 7 and 8

3.7.2 DELETE

The DELETE option allows you to delete a surface or a list of surfaces from the database. The deletion can either be done manually or with the digitizer.

```
Enter beginning and ending surface numbers
(# to quit)
Delete lines and points associated with surface(s)
(default: no)
```

Specify the range of surfaces to be deleted and whether the associated entities are also to be deleted.

3.7.3 ENTER

The ENTER option creates a surface from four points selected in a natural sequence. The points can either be selected manually or with the digitizer.

```
Enter new surface number
Enter four point numbers
```

Specify the new surface ID and the four associated point IDs in the correct order.

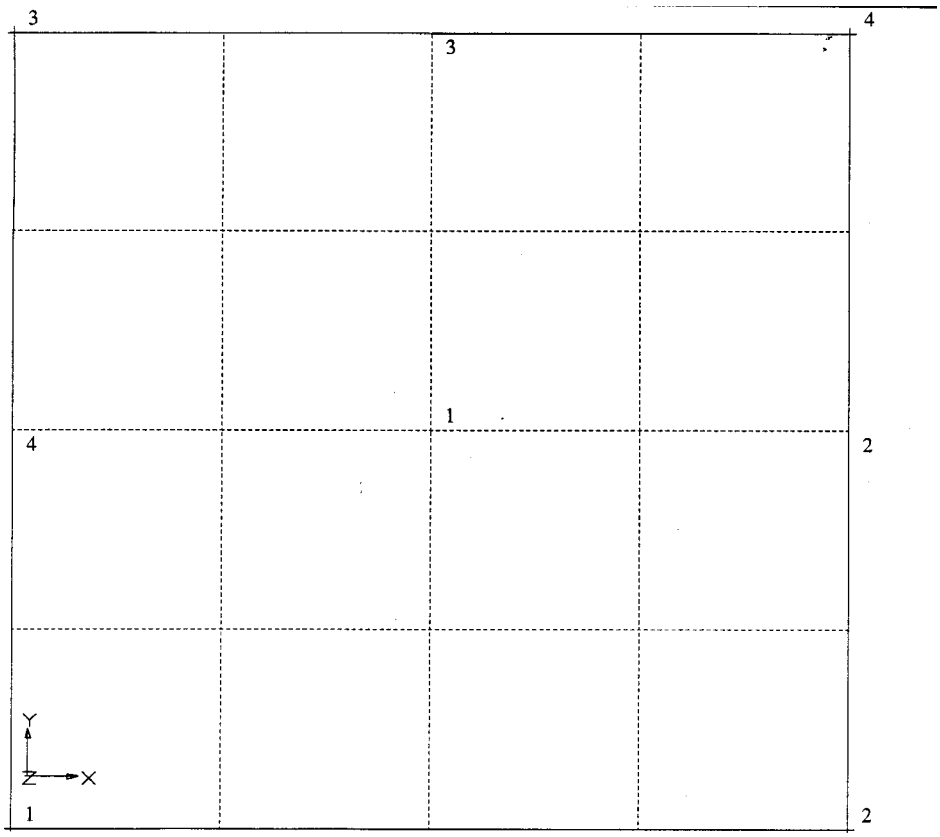

Fig. 3.7.3.1 Surface Generated From Four Points

3.7.4 EQUATION

The EQUATION option allows you to create a surface from 48 parametric coefficients input successively as the x direction equation, the y direction equation and the z direction equation. The surface coefficients are appropriately converted into the line coefficients and stored internally.

```
Enter new surface number
Enter coefficients of parametric equation (40 coefficients)
Enter matrix of x coefficients (4×4) (s = 0.3 for each row)
    Row 1 (1=0) >
    Row 2 (1=1) >
    Row 3 (1=2) >
    Row 4 (1=3) >
Enter matrix of y coefficients (4×4) (s = 0.3 for each row)
    Row 1 (1=0) >
    Row 2 (1=1) >
    Row 3 (1=2) >
    Row 4 (1=3) >
Enter matrix of z coefficients (4×4) (s = 0.3 for each row)
    Row 1 (1=0) >
    Row 2 (1=1) >
    Row 3 (1=2) >
    Row 4 (1=3) >
```

Specify the new surface ID and the 4×4 matrix of parametric coefficients in each direction.

3.7.5 EXTRUDE

The EXTRUDE option creates a surface by extruding a specified line along the coordinate directions or along another straight line. You can select the line to be extruded either manually or with the digitizer.

```
Enter new surface number
Enter range of line numbers to extrude
Enter x, y, z for an axis or L for a line number
Enter extrusion distance
```

If you specified L above

Enter line number

Specify the line number along which the surface is to be extruded.

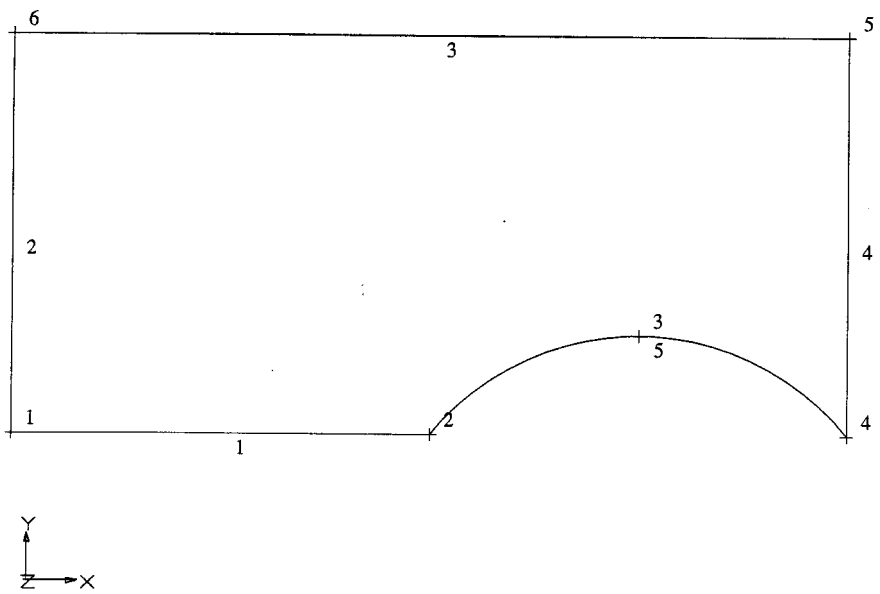

Fig. 3.7.5.1 The Lines to be Extruded Along z Axis

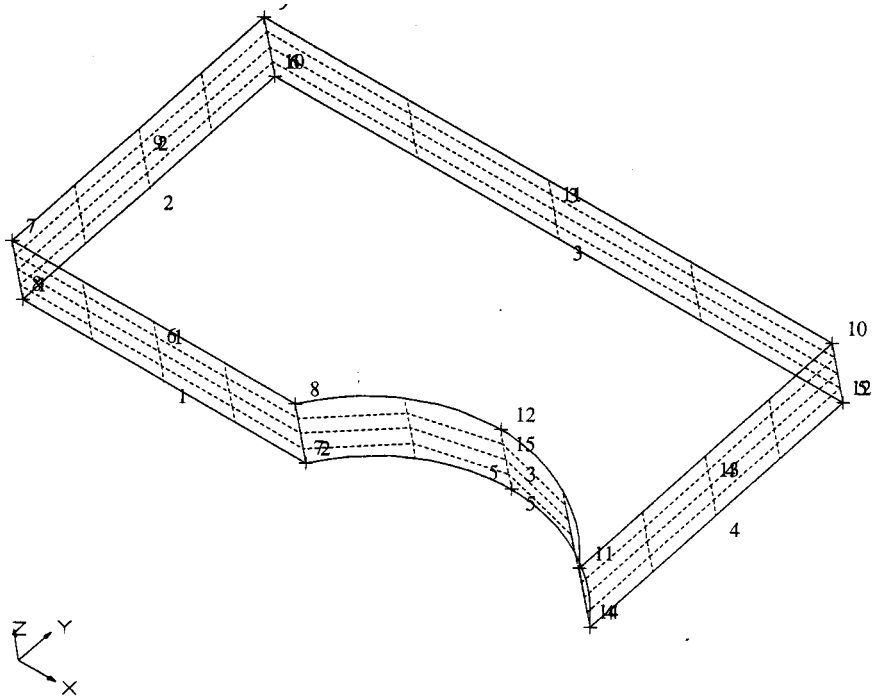

Fig. 3.7.5.2 Geometry Generated by the Extrusion

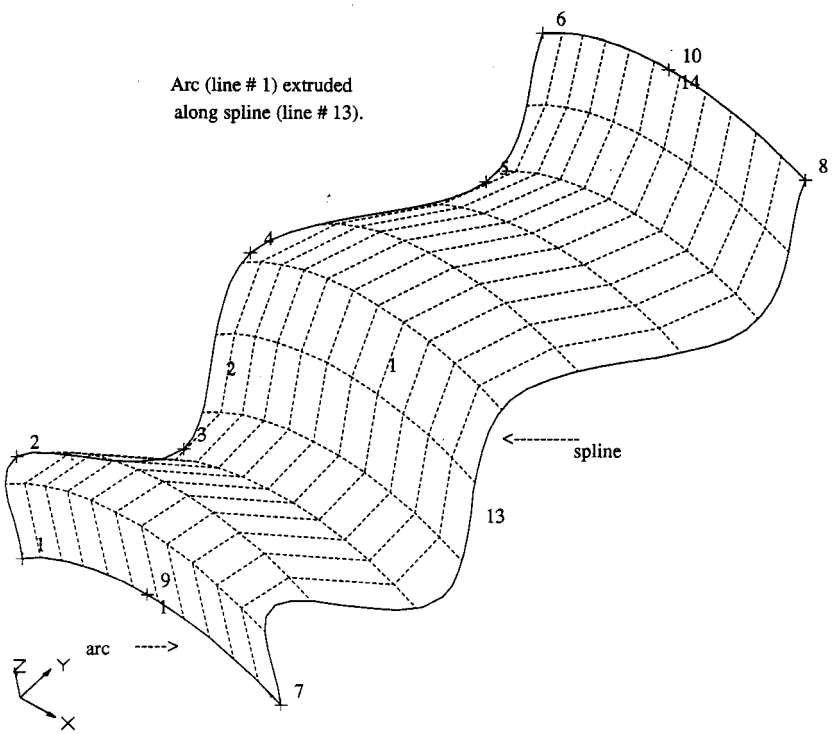

Fig. 3.7.5.3 Extrusion Along a Line

3.7.6 FOUR EDGES

The FOUR-EDGES option allows you to create and store a surface using four lines. You must ensure that the endpoints of successive edges meet to close the surface.

```
Enter new surface number
Enter line numbers (4 lines)
```

Specify the ID of the new surface and the IDs of the 4 lines, bounding the surface in a natural order.

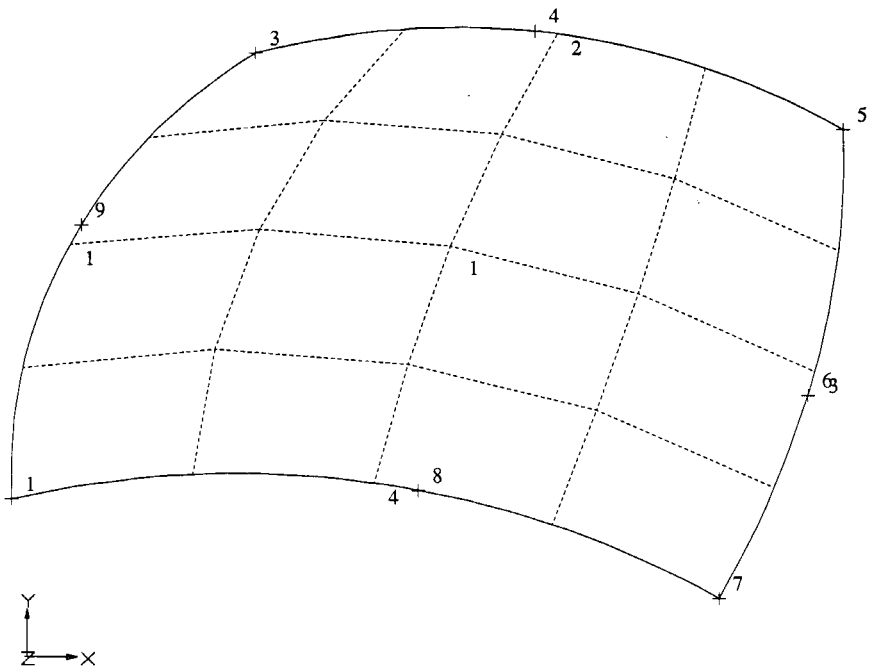

Fig. 3.7.6.1 A Four-Edged Patch

3.7.7 MIRROR

The MIRROR option allows you to mirror an existing surface about one of the three coordinate planes to create a new surface.

Enter new surface number
Enter surface number to mirror
Enter mirror plane
xy yz zx
(default: yz)

Specify the new surface ID, the ID of the surface to be mirrored and the mirror plane. You can also select the surface to be mirrored through the digitizer.

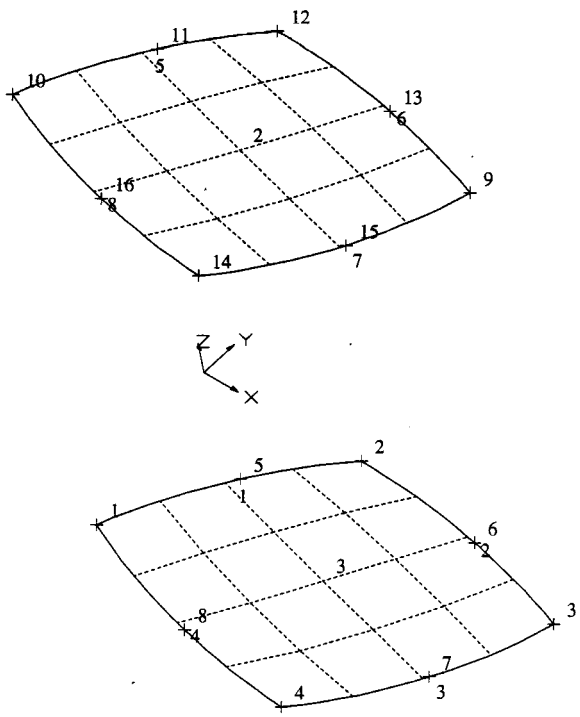

Fig. 3.7.7.1 Surface 3 Generated by Mirroring Surface 2 About xy

3.7.8 PARAMETRIC

The PARAMETRIC option creates a surface from two, three or four lines with the same parametric direction:

```
Enter new surface number
Enter 2-4 line numbers
```

Specify the new surface ID and the IDs of the lines with the same parametric directions.

3.7.9 REVERSE

The REVERSE option inverts the parametric direction of a surface, and subsequently, reverses the parametric directions of the lines that define the surface. The resulting surface is then stored either with the default surface ID or a specified ID.

```
Enter new surface number
Enter surface number to reverse
```

Specify the new surface ID and the ID of the surface to be reversed.

3.7.10 ROTATE

The ROTATE option creates a new surface by rotating an existing surface about the active coordinate frame. It has the capability to create intermediate surfaces along the arc swept if the number of the specified surfaces exceeds one.

```
Enter new surface number
Enter surface number to rotate
Enter rotation (x, y, z)
Enter number of new surfaces
```

Specify more than one surface if you wish to create surfaces at equi-angular intervals along the arc.

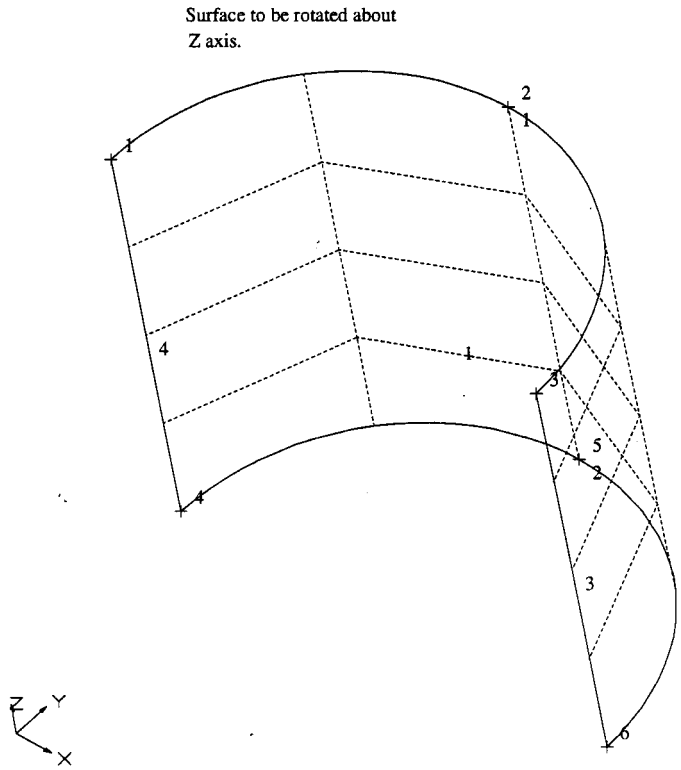

Fig. 3.7.10.1 Surface 1 to be Rotated About z

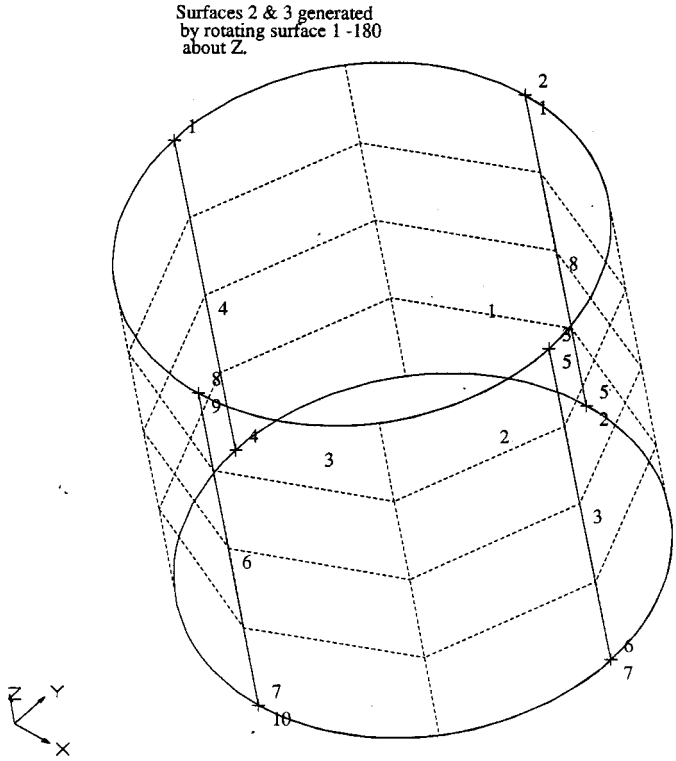

Fig. 3.7.10.2 Surfaces 2,3 Generated by Rotating 1, -180° About z

3.7.11 SCALE

The SCALE option creates a new surface by scaling an existing surface in the active coordinate directions.

```
  Enter new surface number
  Enter range of surface numbers to scale
* Enter scale factors (x, y, z)
```

*Specify the scale factors (three real values) in the active coordinate directions.

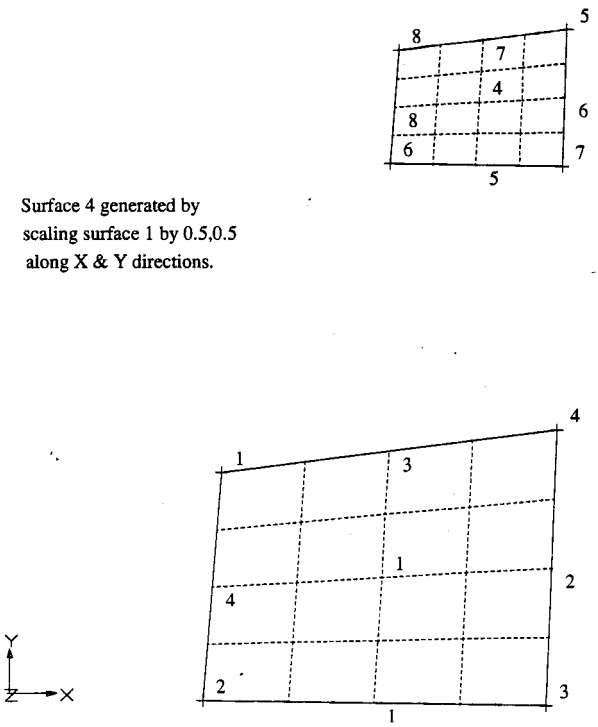

Fig. 3.7.11.1 Surface 4 Scales from Surface 1 - Scale Factors (0.5, 0.5, a)

3.7.12 SMOOTH

The SMOOTH option operates on two surfaces with a common edge and smoothes them so that first order continuity along the edge is ensured. You must ensure that the two surfaces do indeed share a common edge.

Enter surface numbers to smooth

Specify the IDs of the surfaces to be smoothed. You must note, however, that only surfaces whose *common edges are straight* can be smoothed. Also, a *plane* surface and a *curved* surface cannot be smoothed.

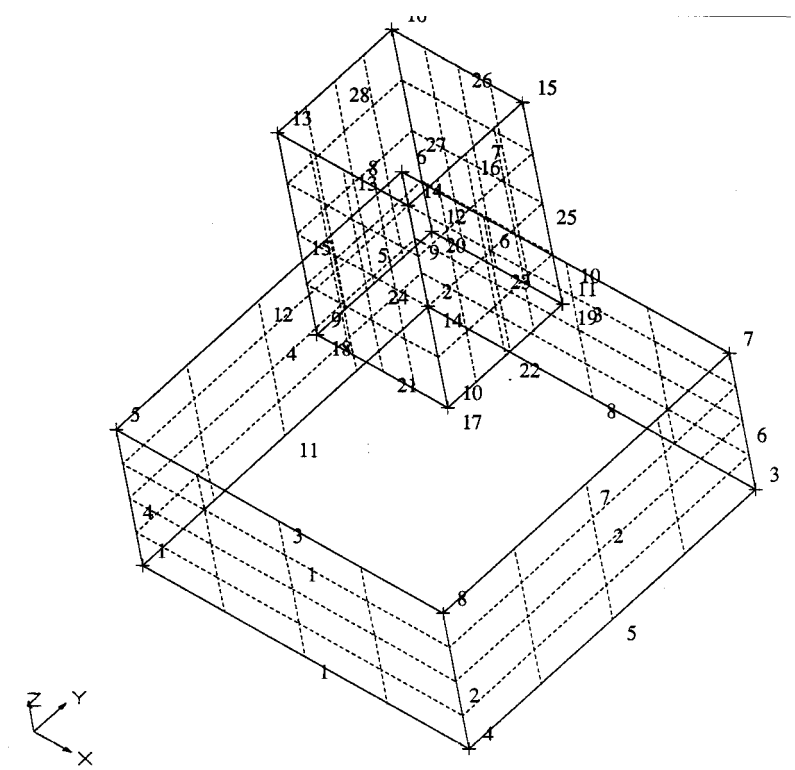

Fig. 3.7.12.1 Surfaces 1-8 Before Smoothing

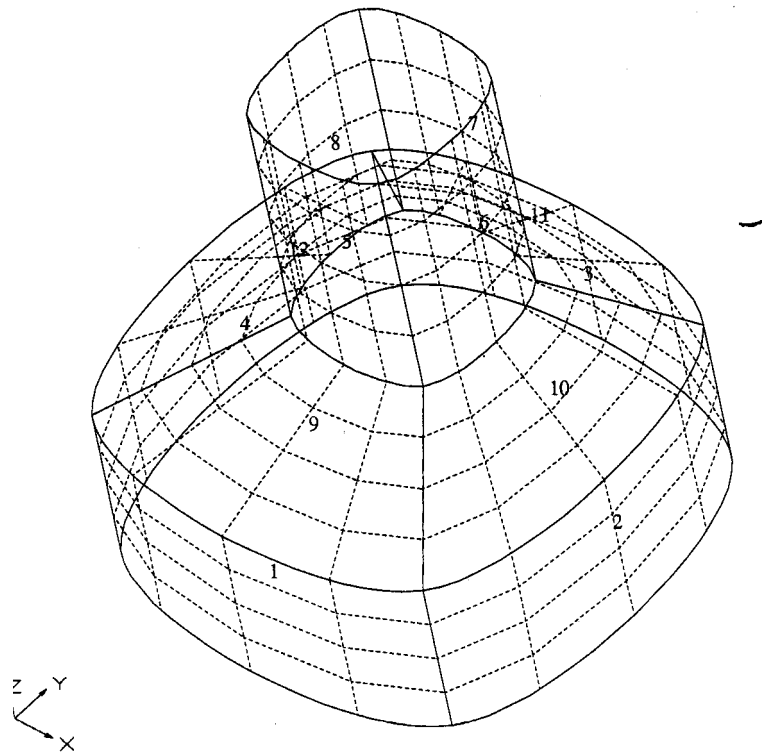

Fig. 3.7.12.2 Surfaces 1-4 and 5-8 Smoothed to Create This Geometry

3.7.13 THREE EDGES

The THREE-EDGES option allows you to create triangular patches bounded by three connecting lines.

```
  Enter new surface number
* Enter line numbers (3 lines)
```

*Specify the three connecting lines in a natural order.

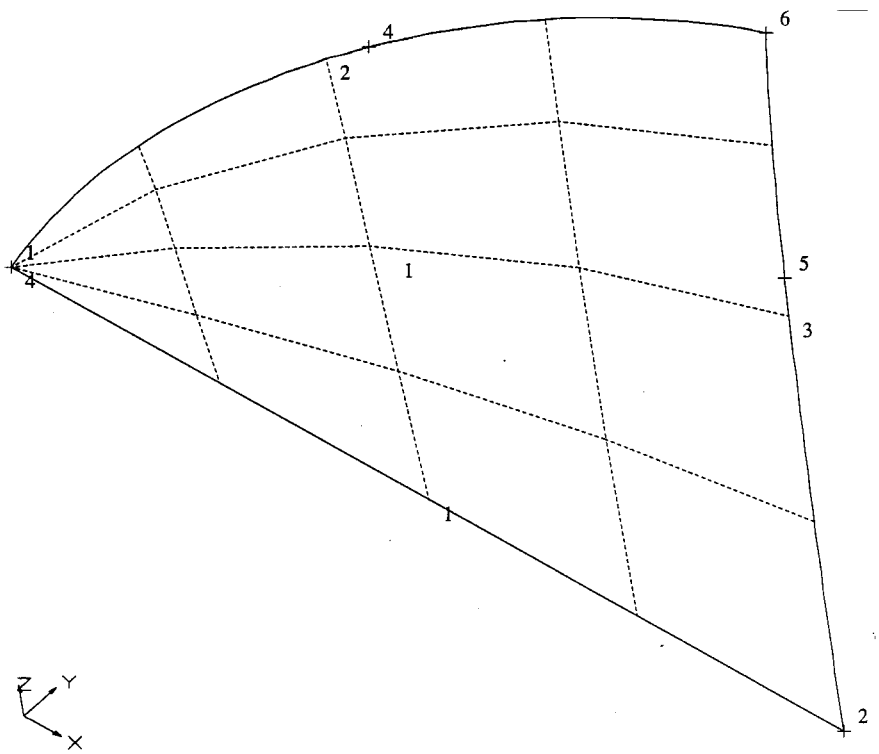

Fig. 3.7.13.1 A Three-edged Surface

Note that the apex of the patch is formed at the beginning of the first line selected. You may use the DISPLAY-OPTIONS - LABEL-PARAMETRIC-DIR (see Chapter 2) option to find the beginning of line entities before using this option.

3.7.14 TRANSLATE

The TRANSLATE option creates a new surface by translating an existing surface in the three coordinate directions. You can also translate a range of surfaces, providing that you set the digitizer mode OFF.

```
  Enter new surface number
  Enter range of surface numbers to translate
* Enter translation (x, y, z)
```

*Specify three real values which give the translations along each of the active coordinate directions.

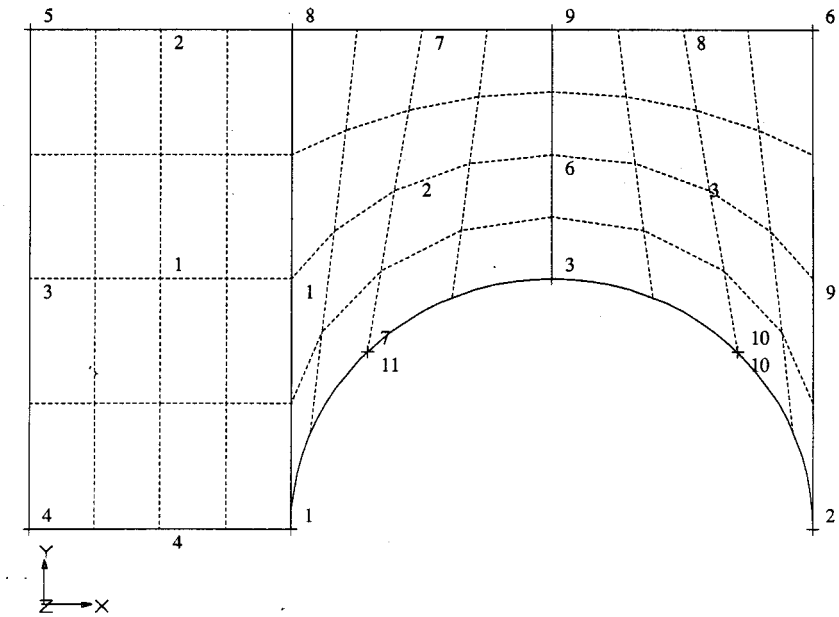

Fig. 3.7.14.1 Surfaces Defined on a Plane

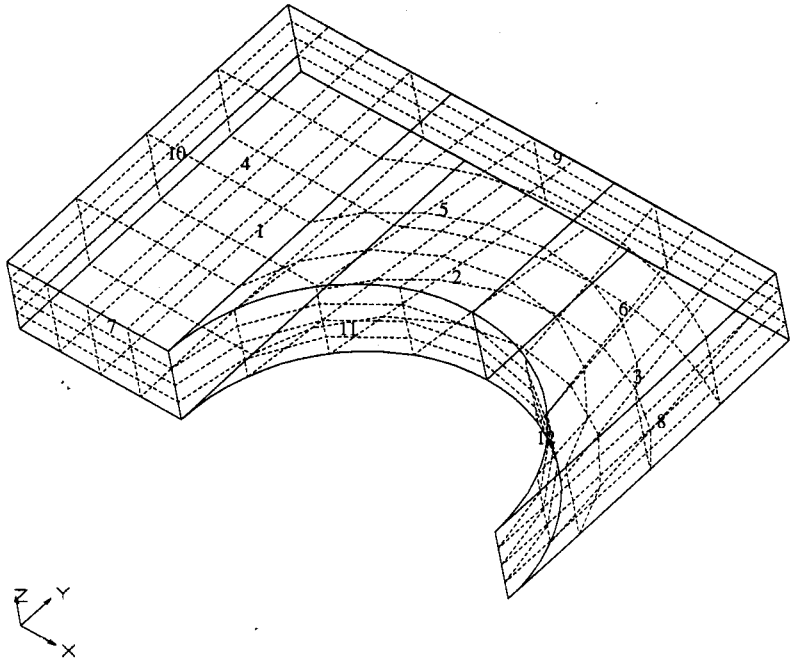

Fig. 3.7.14.2 Surfaces 1,2,3 Translated Along z to Create 4,5,6
(Additional surfaces are entered to complete surface definition of model.)

3.8 ASSEMBLE MODELS

You can create and save components of a big model since it is easier to manipulate the entities on smaller pieces and eventually bring them together through this option to get the complete definition. The system cannot execute this option under the following circumstances:

1. When it asks you for the file name, you provide a name that does not exist in the prescribed location. The system gives the following message:

Given file does not exist. Try again.

2. When you give a file name which is the same as the file you read when you started BESTVIEW, the system tells you:

ERROR! Can't assemble a file on itself!

3. When you give a *file* name and that *file.RES3* exists in the working directory (i.e., the *file* had been named with results on a previous BESTVIEW session), the system will then say:

ERROR! Can't assemble files having results!

4. When you give a file name which has already been assembled once in the current session, the system tells you:

ERROR! Given file has already been assembled!

Since the system shows a list of all files being assembled in the current session, you will always be aware of the assembled components. Currently, the system is incapable of handling the following situation:

Step 1: You enter BESTVIEW with a unique file name, such as *ZZ*, in the first session.

Step 2: You assembled models from 3 files $p1$, $p2$ and $p3$.

Step 3: You exited BESTVIEW after saving the database so that you now have a model file ZZ in your current working directory, which is an assembly of three sub-components.

Step 4: You again enter BESTVIEW with the file name ZZ in the second session.

Step 5: You assemble the file $p2$ again.

Since, in the second session, BESTVIEW does not know the component files assembled in the first session and since, during assembly, duplication of any entity with existing entities is not checked, an additional set of all entities coming from the file $p2$ would be generated.

You can avoid the situation by performing the assembly process in a single session.

If you have already assembled one or more model files, the system will give you a list of the assembled-model-file names. The system asks you:

Enter the problem name:

Give a character string (without blanks) up to 80 characters.

Every time you assemble a model, all the entities belonging to that model are brought in and grouped together under a specific GROUP name. We emphasize here again that duplication of entities between the model being assembled and any existing model residing in the database at that time is not checked. This gives the following advantages:

1. If you assemble a component and later decide to delete all the entities belonging to that component, you simply select GROUP.DELETE option (see Chapter 2). When the system asks you:

Group entities to be deleted?

   you should click on *Yes*.

2. Provided you assemble models which have consistent number of entities at respective interfaces (i.e., the same spatial location of entities in both components at the common interface), the generation of independent entity numbers in the GROUP definition would help in the preparation of data for GPBEST. Data preparation is totally dependent on the information contained in each GROUP definition.

The use of this option is illustrated below. For example, component-1 has been meshed:

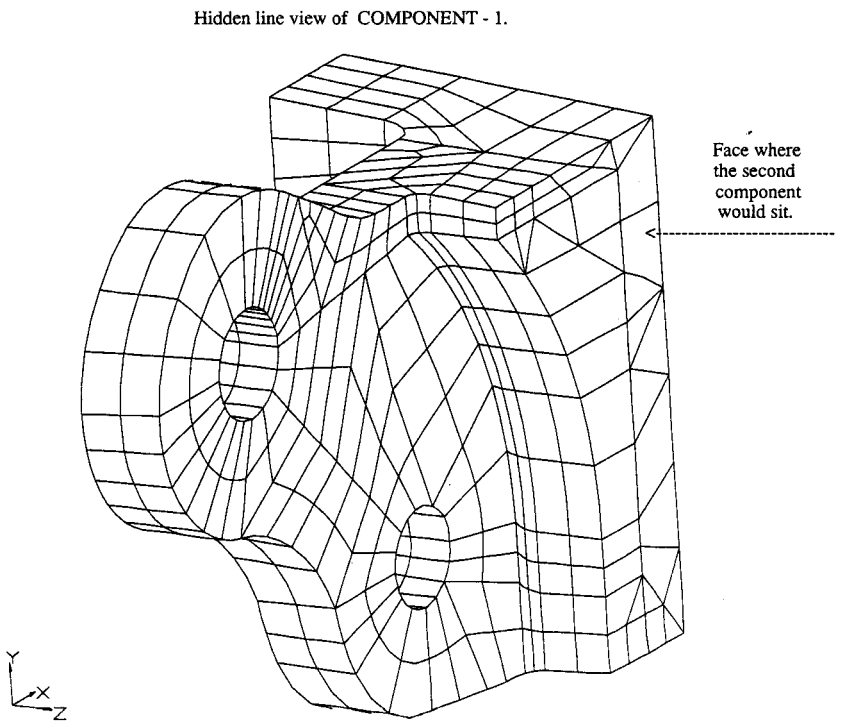

Fig. 3.8.1 The First Part of a Model

You have saved the model by the name *PART 1*.

For example, assume that you have generated component-2 of the same model in a different BESTVIEW session:

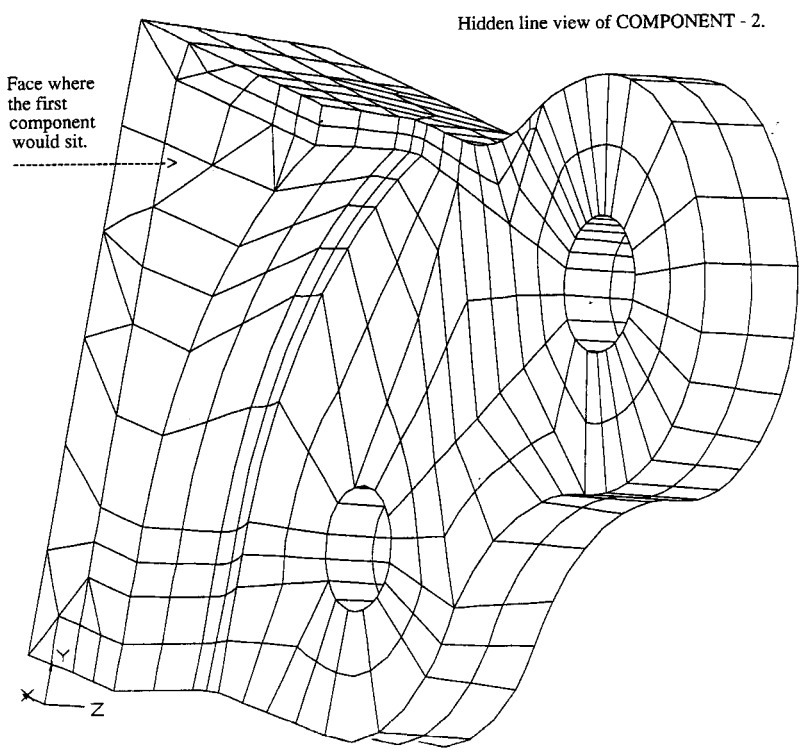

Fig. 3.8.2 The Second Part of the Model

You have saved the model by the name *PART 2*.

Notice that the entities (elements can only be seen on the figures) are identical in spatial location at the common interface.

Now enter BESTVIEW with a unique file name, such as *ZZ*.

Select DEFINE GEOMETRY.
Select ASSEMBLE MODELS.

Enter the problem name:	PART 1

Select ASSEMBLE MODELS. The system will tell you:

The following files have been assembled:
PART 1

Enter the problem name:	PART 2

Now the assembled model looks like this:

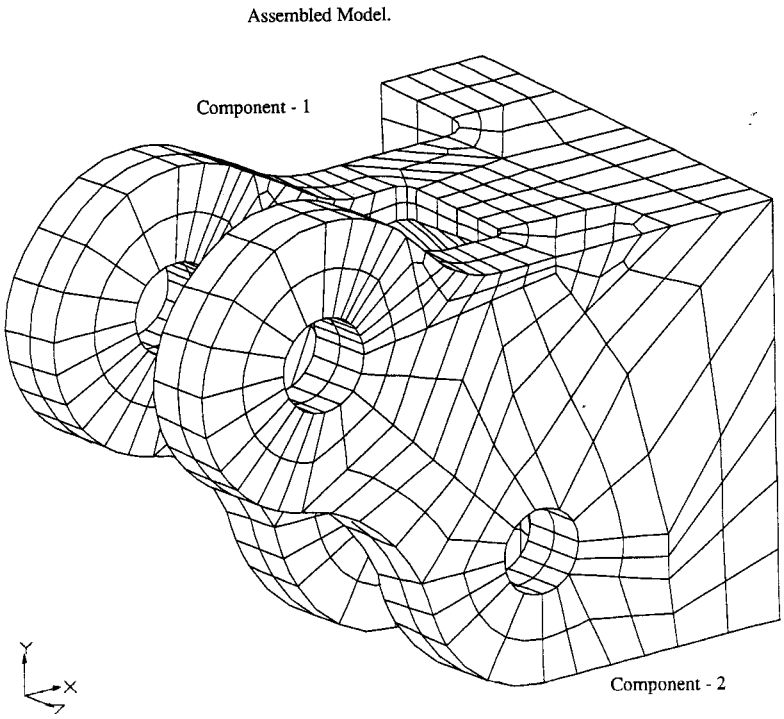

Fig. 3.8.3 The Required Model

Thus, if you build your model component by component, always try to think of a component in terms of a GMR (as applied to GPBEST), checking consistency of entities at relevant interfaces between adjacent components; and assemble all of them. You can gain the following:

1. You do not have to define GROUPs. These are automatically done.
2. Ease of manipulating and generating a smaller component.

You should remember, however, that all entities will have a different numbering order compared to the individual components.

3.9 IGES

The IGES (Initial Graphics Exchange Specification)/PDES (Product Data Exchange Specification) defines a file format for the exchange of information between heterogeneous CAD/CAM software. It provides an easy means of transferring data from one program to another. In this release, we use IGES/PDES Version 5.1 for importing model information from other software capable of generating the proper IGES file. The IGES translator must be used in conjunction with BESTVIEW. BESTVIEW can be used to import model and/or geometry information, and it can also be used to write out a GPBEST data file. Chapter 8 of this manual contains several IGES tutorials to enable the user to quickly become familiar with the IGES interface.

3.9.1 SUPPORTED IGES ENTITIES

Entity Number	Implication
100	Arc/Circle
108	Plane
110	Straight line
112	Parametric spline curve
114	Parametric spline surface
116	Point
120	Surface of revolution
122	Tabulated cylinder surface
124	Transformation
126	Rational B-spline curve
128	Rational B-spline surface
134	Node
136	Element (6-noded triangle and 8-noded quadrilateral)
144	Trimmed surface

NOTES about the above table:

1) For entity number 108, an unbounded plane is considered.
2) Entity 128 includes the popular COONS patch.
3) Entities 134 and 136 permit import of finite element models.
4) If entity 144 is a 3 or 4 sided surface, it is brought in as a surface. If it has more than 4 sides, then only the bounding lines are imported.

The current IGES translator has been tested with data from Unigraphics, Pro/Engineer, Catia and I-DEAS. While some major functionality has been checked, continuous improvement is being made to the IGES translator to accommodate other CAD systems and entities.

3.9.2 USER GUIDELINES

There are several suggestions that can help the user utilize the IGES translator more effectively. Some suggestions apply to decisions the user must make when constructing the original model

in their own CAD system. Some suggestions apply to handling the data brought into BESTVIEW after the IGES translator is run.

First, it is important to realize that IGES is not intended to be the primary method of transferring data from one CAD system to another. If the user is able to export finite element data to a PATRAN or I-DEAS file, these can be translated directly into a GPBEST data file or they can be read into BESTVIEW for further processing. This is the preferred method of translating finite element data into GPBEST format.

However, if finite element data is not available, then geometry (i.e., points, lines and surfaces) can only be brought into the GPBEST system via the IGES translator. The geometry can then be used to build a mesh in BESTVIEW. Loads and boundary conditions can be applied, and then the GPBEST data file can be output from BESTVIEW.

In preparation of a model for use with the GPBEST IGES translator, the user should try to ‘‘clean up’’ the original file as much as possible. Unnecessary entities should be removed. These include text, dimensioning lines, construction lines, scratch areas, coordinate system axes, etc. If the area to be analyzed using GPBEST includes only a small portion of the overall model, only the portion of interest should be translated.

The user must be aware of some important aspects regarding the curve and surface order in the IGES/BESTVIEW interface. Although IGES permits some curves and surfaces to be nth order, BESTVIEW limits curves and surfaces to 3rd order. For example, if the IGES file contains a type-128 sixth-order surface, it will be converted to a third-order surface when it is brought into BESTVIEW. This may or may not change the geometry definition of the model significantly.

If the user has a choice, they should select a third-order maximum on the order of entities their CAD system writes out to the IGES file. If the user has no control over this, then the original geometry should be constructed using small enough entities to permit accurate representation by third-order entities. Avoid multiple changes in curvature on single curves and surfaces. However, if this problem cannot be avoided, then merely delete the offending surfaces and regenerate them from points and lines in the BESTVIEW program.

Figure 3.9.2.1 illustrates a simple L-bracket. Single lines are used along the long edges of the bracket. However, in the fillet area, dozens (or hundreds) of lines are used to model the curve. No doubt, the user did not do this intentionally. However, while creating the IGES file, the CAD system created many lines to model what was originally a single curve. This situation also occurs with surfaces.

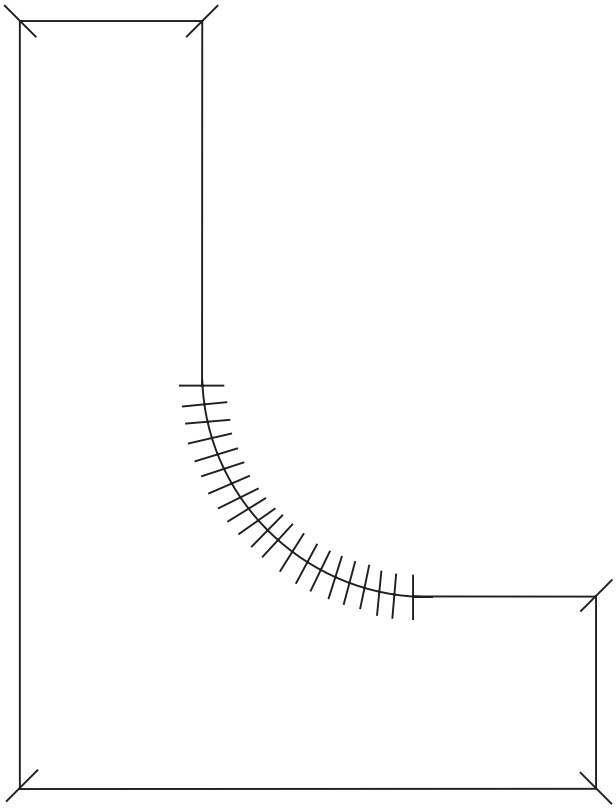

Figure 3.9.2.1 Simple Bracket With Heavy Line Concentration at Fillet

As this frequently occurs, the user has two options. In the original CAD system, a different type of curve that may not be divided so heavily when run through IGES should be used. Some trial and error may be involved. Another approach is to adjust what is known as the ‘‘knot value.’’ A large knot value indicates high precision and thus many entities are required to accurately represent the curve or surface. A small knot value will result in fewer resulting entities, with a possible decrease in the model accuracy. However, the resulting accuracy may be totally acceptable.

If these two suggestions cannot be implemented, then there will be a large number of entities near the curve. In this case, it is often wise to delete all the lines and surfaces in the offending area and use a few of the ‘‘point’’ entities to construct curves and surfaces in BESTVIEW.

Another problem that may be encountered is when lines lie along other lines and surfaces lie on other surfaces. This creates a double- geometry definition. In some cases, the overlapping lines and surfaces should be removed in BESTVIEW before group definition and meshing can take place. Figure 3.9.2.2 illustrates this situation.

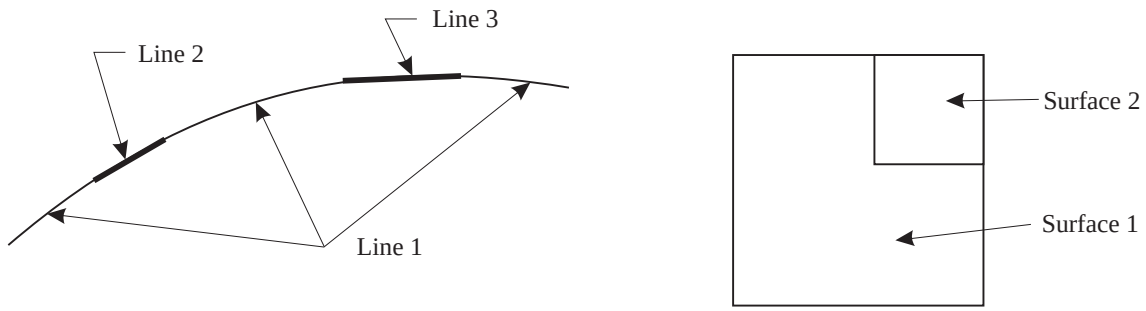

Figure 3.9.2.2 Overlapping Lines and Surfaces

3.9.3 BESTVIEW SESSION

There are two ways to use the IGES translator:

1) Inside the BESTVIEW program, under the DEFINE-GEOMETRY menu.
2) Outside of the BESTVIEW program, at the UNIX prompt. This method generates a file ‘‘igsdata’’ that must be read into the BESTVIEW program.

In both cases, the process starts with an IGES file and ends inside the BESTVIEW program. Both methods are illustrated with the IGES tutorials in Chapter 8 of this manual.
When the IGES option is selected, the system asks:

```
Give the IGES.filename: (<A> to abort):
```

A character string without blanks, up to 70 characters, is expected. If IGES fails to execute from within BESTVIEW, the following message will appear in the command window:

```
Warning! IGES execution not possible now.
Not enough dynamic memory. Exit BESTVIEW.
Run IGES separately and reinvoke IGES from within BESTVIEW.
```

In the above situation, you can execute IGES from outside BESTVIEW. This would produce a file ‘‘igsdata,’’ which would be read in the subsequent IGES selection from within BESTVIEW.

If you generate any mesh (nodes and elements) information in PATRAN and want to bring that model into BESTVIEW, then enter *P* in the following query:

```
Model generated through: <P>atran, <O>ther:
```

PATRAN dumps IGES element information somewhat differently than the other CAD programs, which is highlighted by the previous question. Although the DIRECTORY ENTRY section of the PATRAN IGES file may mention that a single line describes an element, PATRAN actually uses two lines instead.

The system will then ask you to:

```
Give search radius for equivalencing points:
```

A real number is expected.

This value is used to avoid duplication of points as the model is being brought in. Consequently, all types of lines associated with these points are also equivalenced. The system works on equivalency of entities at the final stage, and a *correct* value given above helps to import a clean model. How is the correct value for the equivalencing radius determined? There is not an easy answer for this, especially if you have not seen the model previously. If you do not have any insight into the model dimensions, you can try 0.001. After viewing the model, you may decide to read the file again using a different value.

If you are not satisfied with the model brought in, check the presence of entity #128 and start the process again (by pressing IGES option), this time giving a different search radius.

The system will report the major entities contained in the file and will ask you to:

```
Give mode of transfer:
<S>urfaces, <L>ines, <A>ll:
```

A single character input is expected.

Enter *S* for patch information only. For bringing in any other type of entity (including the patches), enter *A*. The last query of this option is:

```
Surface GROUPing (<Y>es, <N>o):
```

Enter *N* if you do not want patches to be placed (if adequate GROUP information is present in the IGES file) in different groups. If you enter *Y* and adequate information exists, the groups will be automatically generated and the patches will be slotted into the respective groups. If the information is *clean*, you should be able to FAST-MESH the model (see Chapter 4). Relevant information will then be automatically picked up from the GROUP definitions. If you perform

surface GROUPing and later want to delete a patch, you should delete the patch from the database (refer to Chapter 3) as well as the GROUP (refer to Chapter 2) to which it belongs.

If you opt for GROUPing, BESTVIEW names the groups as: g01, g02, g03, . . ., etc.

Once the translation process is completed, the system will report it by saying: DONE

3.9.4 AUTOMESH IGES

An automesh algorithm has been developed for automatically generating a surface mesh of certain surface (or patch) entities of an IGES file. This utility reads the patch level information from an IGES file, internally creates a mesh over each patch and transfers the element and node information into the BESTVIEW database. The automesh utility tries to create a compatible mesh between the adjacent patches, but at times fails to do so over certain patches (depending on adjacent patch information in the IGES file). In such a situation, BESTVIEW would report and highlight the elements which are incompatible.

Currently the following entities are used for the automesh algorithm:

Entity Number	Implication
114	Parametric spline surface
122	Tabulated cylinder surface
128	NURBS surface
144	Trimmed surface

The current ability, thus, cannot be used for any IGES file which does not contain at least one of the above entity types. When invoked, the following querries are asked:

```
Give the IGS_filename: (<A> to abort)
```

A character string, without blanks, up to 70 characters is expected.

After reading the file, the following information is provided by BESTVIEW:

```
The given IGS_file contains the following:
n1    straight line
n2    circular line
n3    parametric spline curve
n4    rational B-spline curve
n5    parametric spline surface
n6    NURBS
n7    plane
n8    surface of revolution
n9    tabulated cylinder surface
n10    trimmed surface
n11    node
n12    element
```

where n1, n2, ... n12 are the corresponding numbers in the IGES file.

Since the utility works on predetermined patches (if for instance n5 + n6 + n9 + n12 = 0), then BESTVIEW will automatically abort the current process.

If any one of the predetermined entities are present, BESTVIEW will report:

```
Initial Work: patch # --- = Type --- (---)
```

and ask for a search radius:

```
Give search radius for equivalencing nodes: r1
```

A real value is expected for r_1.

Depending on the model size and mesh refinement, a suitable value is required. If nothing is known apriori, a good starting value is usually 0.001.

BESTVIEW would now ask about mesh refinement:

```
Give mesh density on a scale of 1-30.
Note that 1 corresponds to a coarse mesh, while
30 corresponds to a fine mesh = n
```

An integer value is expected for n.

It may be noted that a coarse mesh might eliminate some geometrical changes in shape. A finer mesh might require a lower search radius than a coarser mesh for proper equivalencing of nodes.

Once the mesh refinement information is known, BESTVIEW works on each patch and automatically meshes it. Care is taken to produce a compatible mesh between adjacent patches, but there could be situations where a locally incompatible mesh is produced. BESTVIEW will report the status.

Either the following is given:

```
Mesh is compatible
```

or the following message appears:

```
Mesh is NOT compatible
Total incompatible nodes = n
```

In case of an incompatible mesh, BESTVIEW stores the element numbers which have incompatible sides. So while visualizing the model, these incompatible elements may be highlighted using the ‘‘INCO_IGES_AUTO_MESH’’ option from the ‘‘DISPLAY OPTION’’ menu in BESTVIEW.

3.10 IMPORT

If you use I-DEAS (Ver. VI or Master Series), PATRAN (Ver. 2 or 3) or ANSYS to create your model at the discretized mesh level, you have the option of importing the mesh information of that model inside BESTVIEW for preparing a GPBEST datafile. The main objective of this option is to ease data generation. You may find the following information useful:

(1) The IMPORT option only brings in finite element entities. Geometry (i.e., points, lines and surfaces) are not imported.

(2) You must mesh the geometry and define groups or named components in I-DEAS/ PATRAN. Since a group definition option is not available in ANSYS, the translation of data is restricted to a single region only. The information can be stored in a universal file if I-DEAS is used or a neutral file if PATRAN is used. The equivalent procedure can be accomplished in ANSYS by adding the keyword 'CDWRITE' in the 'PREP7' file/process. This generates a file of the form 'Jobname.cdb' which contains the mesh information required to import the model into BESTVIEW. You need not specify material properties and boundary conditions in I-DEAS, PATRAN or ANSYS, as this can be done in BESTVIEW.

    The IMPORT option does not equivalence duplicate nodes in the model. It is suggested that the user equivalence duplicate nodes in PATRAN, I-DEAS or ANSYS first before using this option.

(3) Only the mesh information (nodes and elements) and the group/region information are read into the BESTVIEW database.

(4) If you are preparing data through BESTVIEW for the first time, you should read the section on the PREPARE ANALYSIS option (Chapter 5), which will give you an overall idea of the interactive process involved in generating GPBEST data.

(5) After using the current option to import mesh information in BESTVIEW, use the various options available in this manual for preparing relevant data for GPBEST.

A file ''gpbprob.log'' is created containing any error/warning messages arising during execution of the IMPORT option. Information about problem statistics is also printed out in the same file after GPBEST data is generated using the PREPARE ANALYSIS option which gives you an estimate of the size of the problem and the approximate disk space requirement to run the problem through GPBEST.

When you select the current option, the system will ask:

```
Enter the NUMBER for the pre-processor you want to use:
Abort <0>
PATRAN2 <1>
IDEAS VI <2>
PATRAN3 <3>
IDEAS MS <4>
ANSYS R5.2 <5>
```

If you wish to abort at this point, give 0.

Once the pre-processor is identified, the system will ask for a file name. For example, if option <3> was selected, above:

```
Enter PATRAN neutral file name >
```

Give the name of the file, with extension, if applicable. It is not mandatory that the file should reside in the working directory. You can give the explicit path and the file name. If the given file name does not exist, the system will give you an error message and return to the DEFINE GEOMETRY menu.

Assuming that the given (PATRAN) file name exists, the system will echo the title header of the given file and ask you for a confirmation.

Then the system will ask:

```
Please enter dimensionality of the problem:
1 - for three-dimensional
2 - for 2D-plane stress
3 - for 2D-plane strain
4 - for axisymmetry
Hit <RET> for default (3-D)>
```

If you are dealing with a 3-D data file and have chosen a 2-D or axisymmetric option by mistake, several warning messages will appear:

```
***WARNING
3-D elements cannot be used in a 2-D problem
```

Similarly, a 2-D dataset being mistakenly defined as the default 3-D will give the following warning message:

```
***WARNING
This interface does not support hole or insert elements. 2-D
elements cannot be used with 3-D elements
```

The above warning will also appear if you are dealing with a file containing both 2-D (i.e., LINE) elements as well as 3-D (i.e., SURFACE) elements. Although the IMPORT option is executed, no information is brought into the BESTVIEW database. Under such circumstances, you are requested to exit BESTVIEW and use the PREBEST executable (which comes with your distribution tape) for creating the data.

If you have declared the correct dimensionality of the model, the system will then say:

```
Is there planar symmetry in this problem (y/n)?
Hit <RET> for default (n) >
```

If you have a plane of symmetry, the next query is:

```
Please enter type of symmetry:
1: Half symmetry
2: Quarter symmetry
3: Octal symmetry
Hit <RET> for default (half)>
```

Based on the type of symmetry, the system will ask you to define the axis (or axes) perpendicular to the plane (or planes) of symmetry.

The following query comes only if you are dealing with a file generated by I-DEAS MASTER SERIES (IDEAS-MS):

```
Users of IDEAS-MS may want to scale the data in the universal
file.
Do you want your data scaled?
Hit <RET> for default (n) >
```

If you want to scale your problem while transferring information from the data file to BESTVIEW, enter ‘‘y’’. The system will then ask:

```
Enter the scaling factor for length
Hit <RET> for default (1000.0)>
```

Give the appropriate value. The x, y, z coordinates of all nodes will be be scaled by the amount given for the above query.

The data translation process proceeds and the BESTVIEW database is loaded up with the relevant mesh and group information.

3.11 LIMITATIONS

1. While working with the option ASSEMBLE MODELS:

   (a) For each entity (points, lines, nodes, elements, etc.), there is a maximum of 12000 for every file (defining a component model) being assembled.

   (b) A maximum of 20 assembly processes to define the parent model, assuming each assembly file containing one GROUP,

   or

   If the files to be assembled contain more than one GROUP, then a maximum of 20 GROUPs in the overall assembled model.

2. For each file transfer, using the IGES option:

   (a) Sum total of all entities (those supported by our IGES translator) should not exceed 12000
   (b) A maximum of 30000 points
   (c) A maximum of 15000 lines
   (d) A maximum of 9000 surfaces
   (e) A maximum of 18000 nodes
   (f) A maximum of 8000 elements
   (g) Only 6-noded triangular and 8-noded quadrilateral elements are supported

3. The INTERSECTION⇒SURFACE option can detect up to a maximum of eight intersection lines between two surfaces.

4. The LINE⇒FILLET option does not operate on an ARC. You will need to redefine the arc as a spline. For an indirect way to achieve this, refer to Section 3.5.11.

5. The LINE⇒SMOOTH option does not operate on an ARC. You will have to redefine the arc as a spline to smooth two lines, one of which is an arc.

6. You must define at least two points before you issue a CDRAW option. If you issue a CDRAW after creating only one point, you will have to INITIALIZE to continue the session.

7. The SURFACE⇒SMOOTH option does not operate on surfaces whose common edge is not straight.

8. For the IMPORT option:

   (a) BESTVIEW supports only quadratic elements. Therefore 2D models are restricted to 3-noded beam elements and 3-D models are restricted to using 6-noded triangular or 8-noded quadrilateral elements.

   (b) If the 3-D model contains any 2-D elements, the latter would be ignored. This implies that ‘‘hole’’ and ‘‘insert’’ elements in 3-D models cannot be imported.

   (c) Cyclic symmetry interface is not created by BESTVIEW’s PREPARE ANALYSIS module. You may need to edit the data manually.

4.0 GENERATING THE MESH

4.1 INTRODUCTION

This chapter describes how to create nodes and elements (collectively called a *mesh*), equivalence mesh entities, declare coincident nodes and reverse the nodal connectivity sequence of an element. You may start building the model through geometrical entities such as points, lines and surfaces (or patches) and then mesh at the patch level, or start defining nodes and create elements from the nodal information. After going through the various options described in this chapter, you will be able to judge which option would help you most and combine them in the most effective manner.

Keep in mind that hidden line view is possible only on the mesh level and not on the patch level. So, once you have created mesh information for the model, any fallacies regarding undefined elements may be easily traced visually by turning *ON* both the SURFACE and ELEMENT entities and rotating the hidden-line view of the model. Another handy feature is the FREE EDGE CHECK (under the DISPLAY-OPTIONS, refer to Chapter 2), which identifies any *open* areas in the model by checking nodal connectivity and adjointness of elements.

4.1.1 MESH INFORMATION FROM COMPATIBLE PATCHES

Whenever you have a compatible patch definition, either by generating the information or by importing geometrical entities through the IGES utility, you can almost immediately define the mesh. Define relevant surfaces under GROUPS and use the FAST MESH utility if you want the same mesh subdivisions over all patches clustered under all the GROUPS, or use the CREATE-ELEMENT-SURFACE option or the TRANSITION option to define mesh over each patch. In the latter situation, you should ensure compatibility of elements between adjacent patches, although now you have a greater flexibility of choosing the mesh subdivisions. You may also operate with both the above modes of mesh generation.

4.1.2 MESH GENERATION AT THE NODAL LEVEL

If you would carefully notice the previous discussion, we never talked about generation of nodes, but rather told you how you could generate elements. Nodes are automatically generated based on existing geometrical definitions such as lines and patches. You can also define nodes first (the options would be discussed later) and then define an element by explicitly declaring its nodal connectivity. You can always use the methods discussed in 4.1.1. However, if you plan to use FAST MESH along with other methods of generating elements, you should perform the FAST MESH first and then deal with the others.

4.1.3 WORKING WITH GPBEST LATER

If the final objective is to build the relevant data file for GPBEST, you should check whether the relevant mesh information has gone to the proper GROUP definition (equivalent to a GMR in GPBEST). If you are using the FAST MESH option, nodes and elements will automatically be placed under relevant GROUPS. But when you define mesh entities through methods other than the FAST MESH, you should put them in the GROUP definition to which they belong. It is important for you to remember that during the data preparation process (see Chapter 5), all the relevant mesh information is picked up from each GROUP (which the system then identifies as a GMR).

4.1.4 AN EXAMPLE

To illustrate the above-mentioned procedures, note the following example:

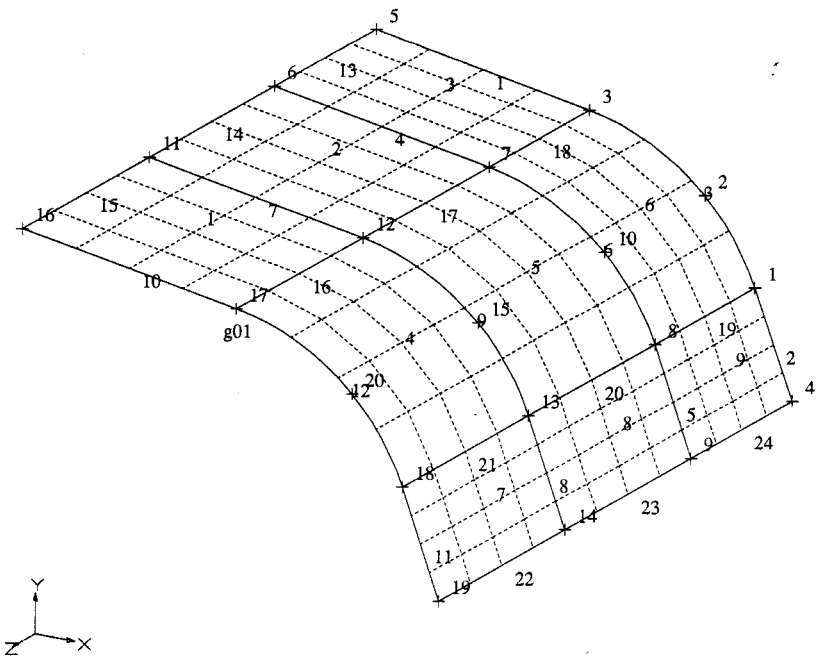

Fig. 4.1.4.1 Geometry of the Example

Surfaces 1 to 6 are placed under a NEW GROUP and the GROUP is saved as *g01*. Then we use the FAST MESH utility and generate a 2×2 mesh over patches 1 to 6.

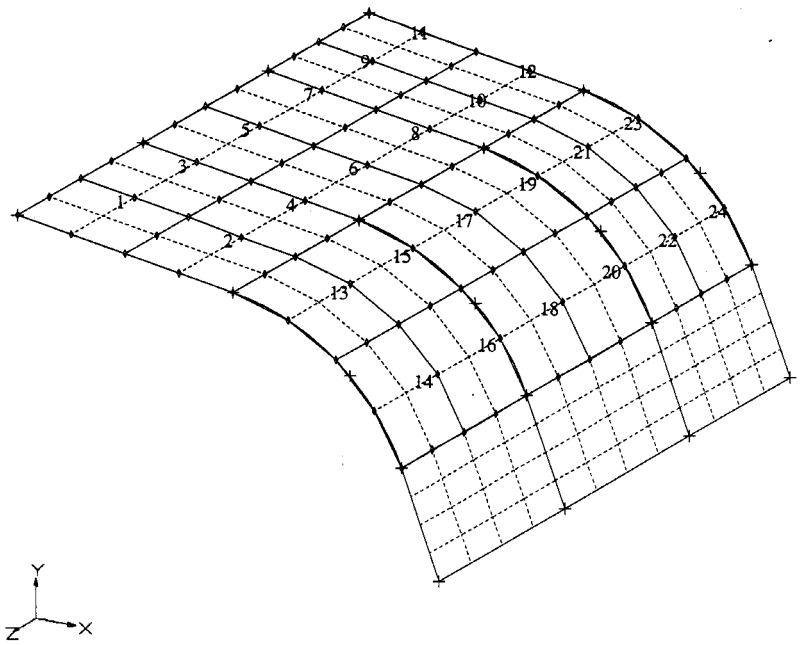

Fig. 4.1.4.2 Using FAST MESH Over Group g01

A LIST - GROUP option shows that all nodes and elements generated through FAST MESH, on the only group present, *g01*, have been put in the GROUP (*g01*) definition. Now use the CREATE-ELEMENT-SURFACE option to generate a 2×1 mesh over patches 8 and 9. Equal bias (value = 1) is given to all edges, as FAST MESH uses equal bias for the meshing process; otherwise, elements would not be compatible. The TRANSITION option is also used to generate a fine-to-coarse mesh over patch 7, such that the mesh again is compatible to those present over adjacent patches. If you now look at the display through the CDRAW option and put only the labels for the nodes as *ON*, you will notice duplicate nodes over edges of certain patches. The system uses the EQUIVALENCE option, which will then clean all coincident nodes and remember the element connectivity sequence. It is a good practice to use the EQUIVALENCE option after you generate a block of elements. The only instance when you would not need this option is when you define an element by clicking the connecting nodes or entering them through the keyboard.

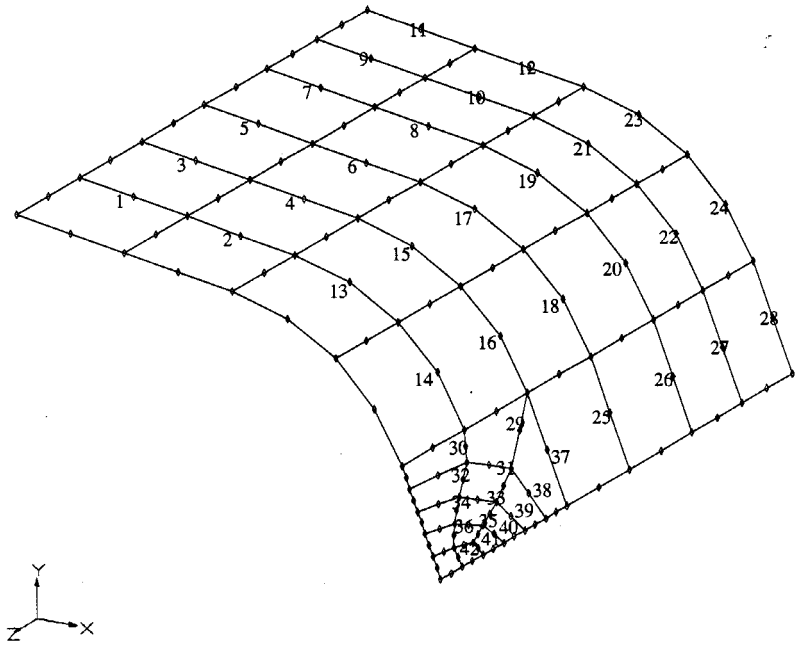

Fig. 4.1.4.3 The Final Mesh

Elements 25 to 42 and their associated nodes (except the ones belonging to elements 14 to 24) now have to be included in the definition of group *g01*. Now you can confirm whether all entities in the group *g01* are proper or not by PLOT-GROUP option (refer to Chapter 2).

4.2 LIST OF OPTIONS

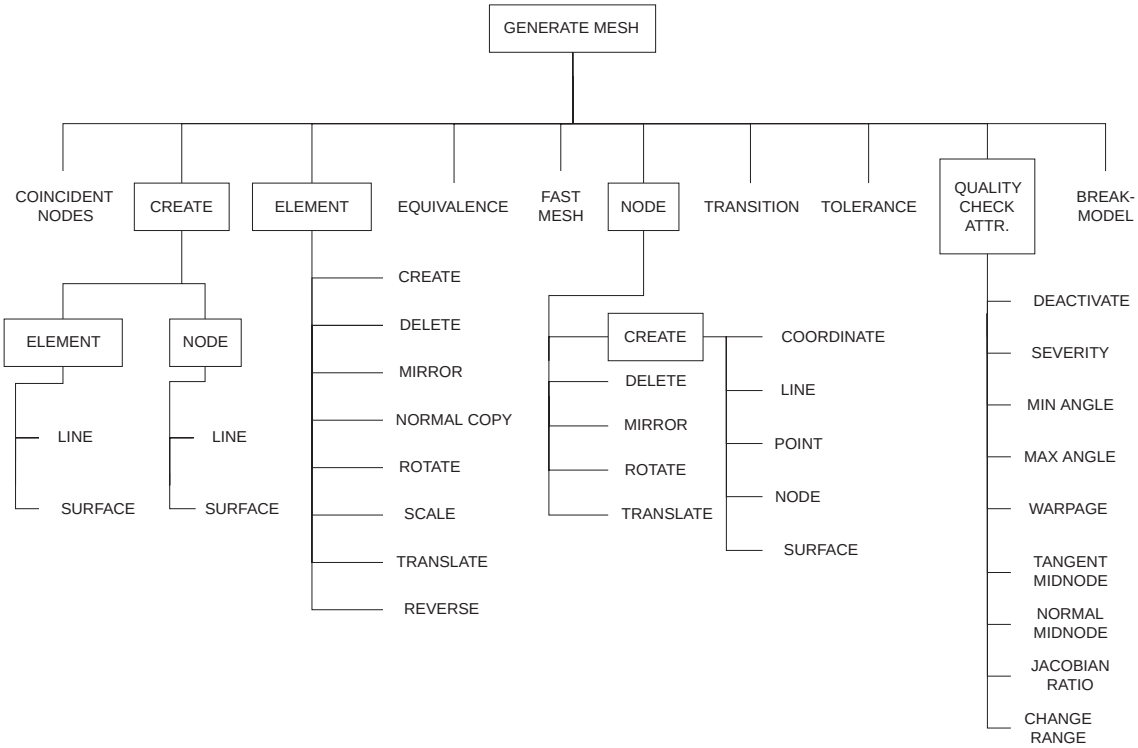

4.2.1 ELEMENT TYPES SUPPORTED

The following element types are supported, primarily with a view to running the Boundary Element software GPBEST.

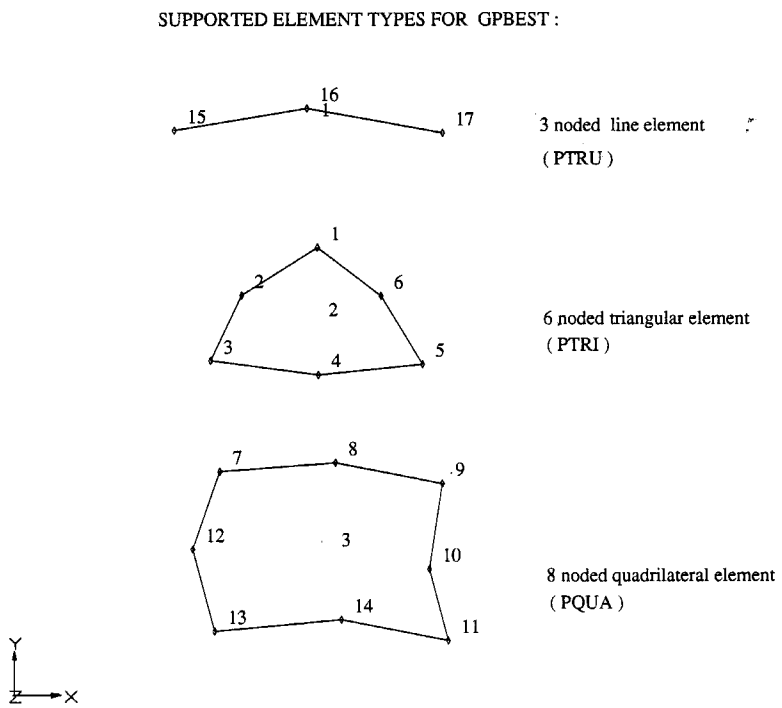

Fig. 4.2.1.1 Element Supported by BESTVIEW

4.3 COINCIDENT NODES

When you select this option, BESTVIEW scans for coincident nodes and gives a list (if applicable) of all the nodes which occupy the same spatial position. If there is a list of nodes which are coincident and you feel that there should really be one node in that place, then use the EQUIVALENCE option (described later) to rectify the problem.

4.4 CREATE

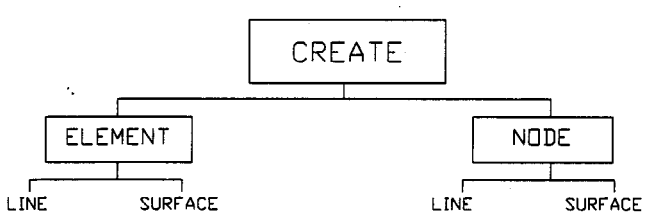

The CREATE option is necessary to generate mesh over a line or patch entity that has already been defined. It enables you to generate mesh entities and define bias values to regulate the mesh distribution over the corresponding geometrical entity.

When you CREATE ELEMENTS along a line, 3-noded line-elements are generated. For the same action over a surface, the choice is between 8-noded quadrilateral and 6-noded triangular elements.

4.4.1 ELEMENT LINE

This option allows you to generate 3-noded line elements along the geometrical LINE identified. If you want to select a single LINE from the display, set the digitizer *ON*. If you prefer to declare a range of LINE entities, set the digitizer *OFF* before going to this option. Depending on the state of the digitizer, one of the following will be asked:

Detect Line ((a) abort, (k) keyboard)

You should click the line you want. If the model is complex and you are unable to detect the line you require, we suggest that you abort at this stage. Turn all ENTITIES (under DISPLAY OPTIONS) OFF except the line and turn ICON (under the DISPLAY OPTIONS) ON. The next DRAW/CDRAW will show the line icons at the c.g. of each line. Next time you are asked to detect a line for meshing purposes, click at the line icon of the relevant line. Enter *k* if you would like to input a specific line number through the keyboard,

or

Enter range of line numbers

If your digitizer is OFF, you can enter a range of lines. Meshing is done on all lines in the range with the same subdivisions and biasing that you declare next.

The system now requests the following:

Enter the number of elements:

An integer input is expected.

Enter the bias factor:

The default is 1.0, which means equal bias (i.e., equal divisions). The bias factor would imply the following, if the number of elements is more than one:

Length of the first element along the line = bias factor *x* length of the last element.

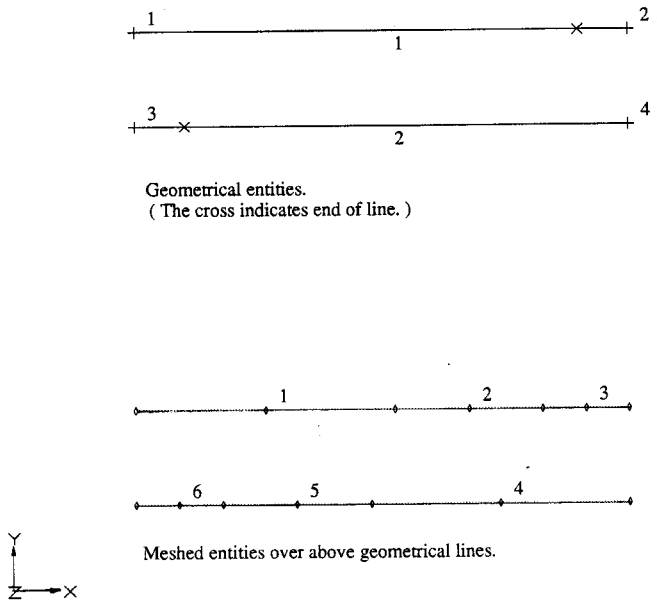

Fig. 4.4.1.1 Meshing with Bias = 3.0

Note that the mesh is dependent on the direction of the lines chosen. You may try the DISPLAY OPTIONS⇒LABEL⇒PARAMETRIC DIREC ⇒ *ON*, which would also show the *end* of a line by putting an icon there. If necessary, you may REVERSE a line (refer to Chapter 3) before performing the current option.

4.4.2 ELEMENT SURFACE

This option allows you to generate either of the following:

(a) 6-noded triangular element
(b) 8-noded quadrilateral element

As in the previous option, you may either detect the surfaces or enter a range, depending on the digitizer status. Assuming that your digitizer status is OFF, the system will ask you to:

```
Enter range of surface numbers:
```

Give 2 numbers to define the range.

```
Enter the element type:
```

Available options are QUADRILATERAL and TRIANGLE. This is a character input. You may enter Q or T.

```
Enter the number of elements (I,J):
```

Give 2 integers defining element subdivisions along the parametric directions (2 adjacent sides). An ($n \times m$) mesh is generated, where n and m are the 2 integers declared.

```
Enter the bias factors (I,J):
```

Give 2 values. If you accept the default value 1.0, then the subdivisions (if any) are equally spaced along both the parametric directions of the surfaces chosen.

If your element type is TRIANGLE, the following additional query must be answered:

```
Enter the pattern (right, left)
```

A character input is expected.

Here we illustrate a series of figures with various values for the above options.

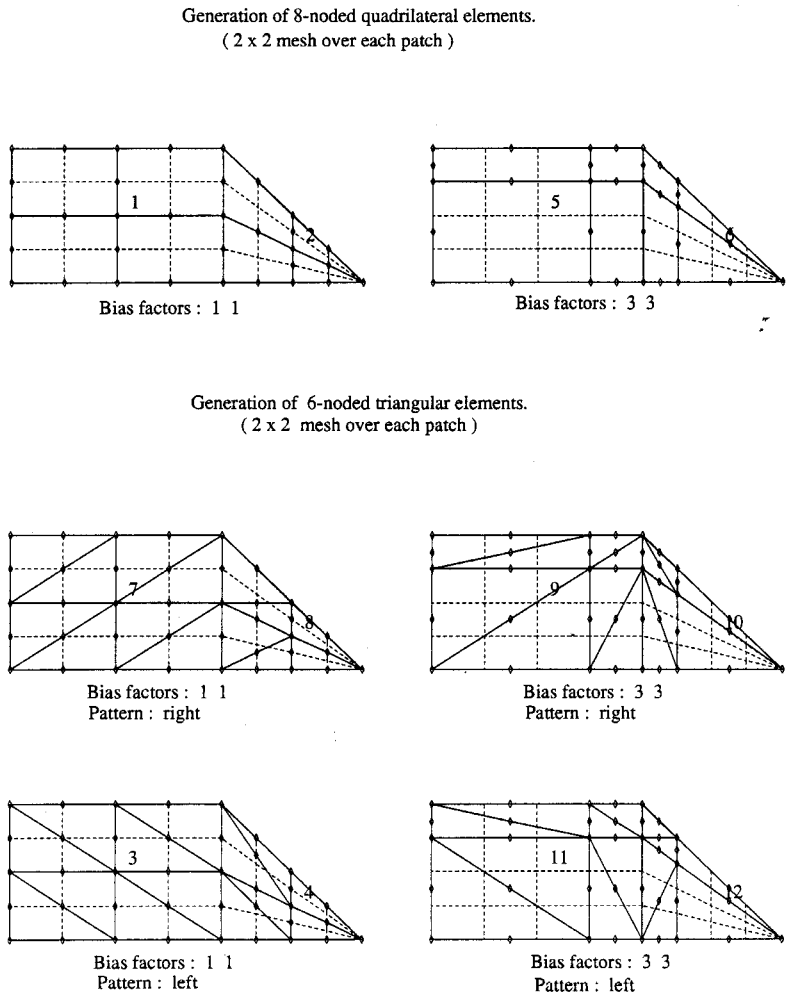

Fig. 4.4.2.1 Various Options for a 2×2 Mesh over a 4-sided and a 3-sided patch

Sometimes in the creation of meshes, you may end up with a configuration which you may not really want. For example, referring to Fig. 4.4.2.2, you meshed four 3-sided patches with a 2 x 2 quadrilateral mesh and bias factor 1.0. The mesh that you obtain is, for the purpose of illustration, shown in (a), where only the mesh entities (DISPLAY OPTIONS ⇒ ENTITY command) were *ON*. Put all entities, except mesh entities, *ON* and you get (b). The meshing was performed over the parametric directions of the patch (i.e., for a 4 x 4 mesh, the elements would fall exactly over the dashed lines representing the patches). We need to place all the apexes at the same position. To do this, first delete all nodes and elements associated with the four patches. Then delete the four 3-sided patches under consideration. Turn the DISPLAY OPTIONS ⇒ LABEL ⇒ PARAMETRIC DIRECTION ⇒ *ON* so that you see the end of each line marked by a cross. Now redefine the four 3-sided patches so that you get the apex of each at the center as shown in (c). You may need to refer to the SURFACE ⇒ THREE EDGES option and the LINE ⇒ REVERSE option, both described in Chapter 3. Now, mesh these patches as before in order to obtain the required mesh shown in (d).

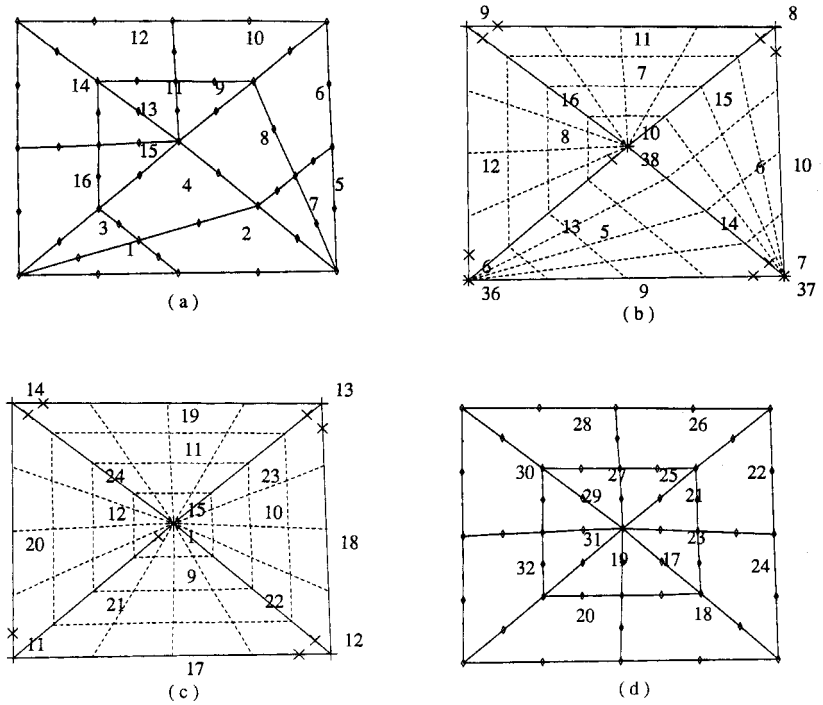

Fig. 4.4.2.2 Generation of a Desired Mesh

Bias factors on the surface level have the same implication as that on the line level, except that now you have two parametric directions on the surface instead of one on the line.

4.4.3 NODE LINE

This option is similar to the one described in Section 4.4.1 (CREATE-ELEMENT-LINE option). The queries are:

```
Enter the line number:
Enter the number of nodes:
Enter the bias factor:
```

An integer for the first two queries and a relevant value for the third query must to be given.

Notice here that you are asked about one line at a time. Also, the definition of the bias factor (in case you are creating more than 2 nodes) is as follows:

> (Distance between nodes i and j) x (bias factor) = (distance between nodes j and k),

where the nodes i, j, k are generated sequentially and are placed along the direction of the line chosen.

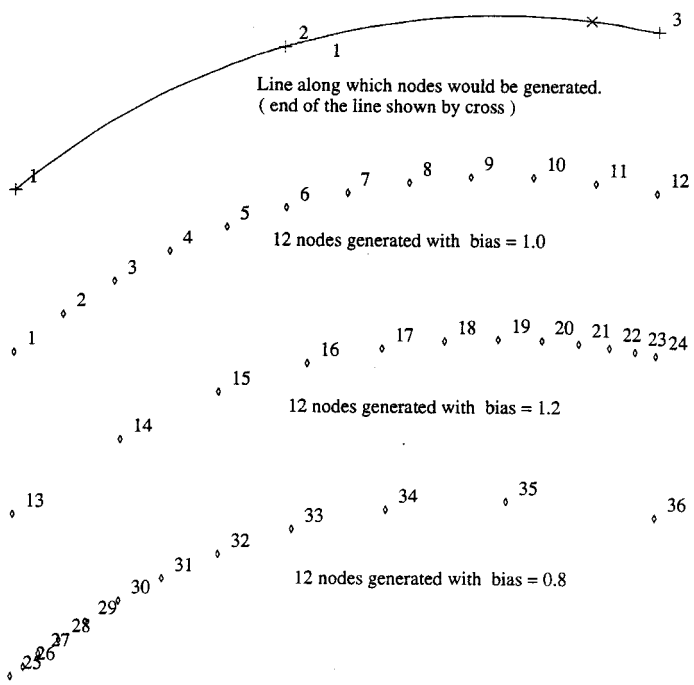

Fig. 4.4.3.1 Generation of Nodes along a Line

4.4.4 NODE SURFACE

This option is similar to the one described in Section 4.4.2 (CREATE-ELEMENT-SURFACE option). The queries are:

```
Enter the surface number:
Enter the number of nodes (I, J):
Enter the bias factors (I, J):
```

Give a valid surface number for the first query. Give 2 integers for the second query and 2 real values for the third. The I, J above denote the parametric directions on the surface.

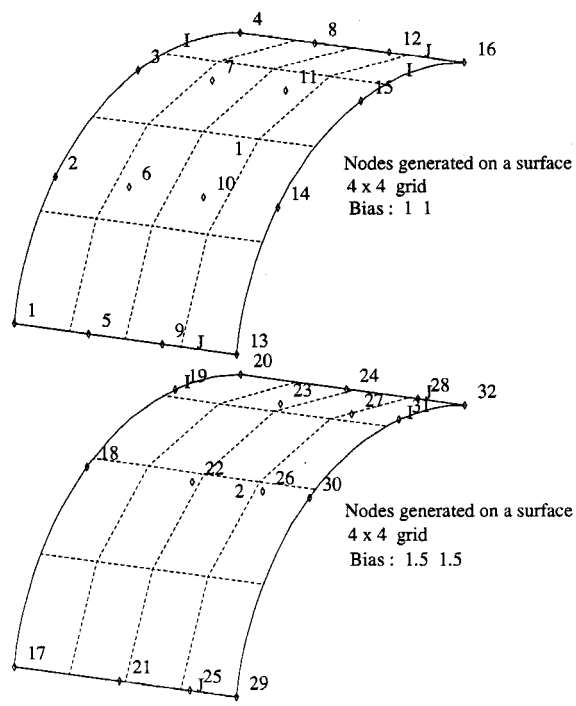

Fig. 4.4.4.1 Node Creation on a Surface

The bias factors have the same implications as those mentioned in section 4.4.3. Note the (I, J) labels on the surfaces shown above. Biasing is done along both I and J. If you give only one bias factor, the second one is taken as 1.0 (i.e., equal distribution along that parametric direction).

4.5 ELEMENT

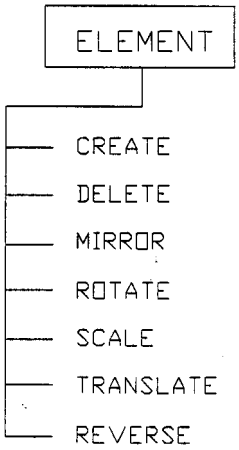

This option deals with the generation and manipulation of element entities.

4.5.1 CREATE

This option enables you to create an element from a set of existing nodes. When you select this option, the system asks you to:

Enter beginning element number:

An integer quantity is expected.

Next, the system presents a list of available element types and asks:

Enter element type:

A character string is expected. The available options are: QUADRILATERAL, TRIANGLE and LINE. You may enter Q, T or L to specify the option.

Then you are asked to:

Enter element connectivity (# to quit):

Depending on the element type, enter nodes to define the connectivity sequence of the element. If your digitizer is *ON*, then select the nodes, defining the connectivity from the screen. For LINE elements, 3 nodes are required. For QUADRILATERAL and TRIANGULAR elements, 8 and 6 nodes are required, respectively.

Notice that, in the above description of creating elements, only the nodes were required and no geometrical entities were involved.

4.5.2 DELETE

If the digitizer is *ON*, this option will ask you to detect the element to be deleted from the database. If the digitizer is *OFF*, you will be asked to:

Enter beginning and ending element numbers:

Two integer values, which define the range of elements to be deleted are to be given. If you give only one number, the system will delete only that element from the database. The following query is then asked:

Delete nodes associated with element(s)?

Select YES or NO, based on your need.

Deletion of any mesh entity, such as an element or node, implies removal of the same from the database but not from any applicable GROUP definition. Therefore, if you defined a GROUP containing elements and nodes and delete any element (and possible associated nodes) belonging to that GROUP, then the element and the associated nodes are deleted from the database but not the GROUP. Under those circumstances, you must also delete the relevant mesh entities from the GROUP (refer to the GROUP-CURRENT, GROUP-DELETE and LIST-GROUP options in Chapter 2).

4.5.3 MIRROR

You may create elements by mirroring existing ones about the axes-planes (i.e., the XY-plane, YZ-plane or the ZX-plane) of the active coordinate frame. The queries are:

```
Enter range of elements to mirror:
```

Enter the lower element number and the higher one defining the range. If your digitizer is ON, then you will be asked to select an element from the screen.

```
Enter mirror plane:
```

A 2-character input is required. The available options are XY, YZ and ZX.

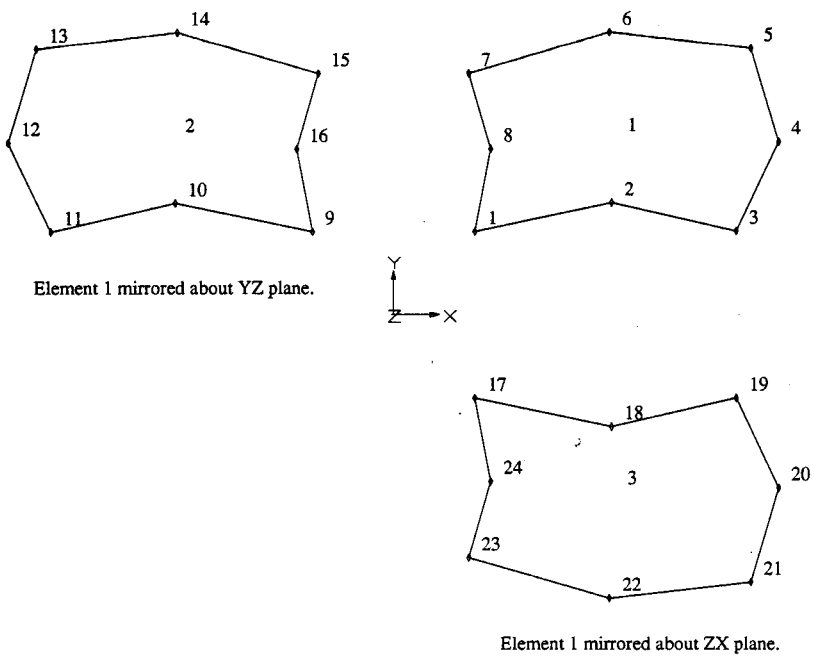

Fig. 4.5.3.1 Element Creation Through Mirroring

4.5.4 NORMAL COPY

It is sometimes necessary to generate elements at a constant normal offset to a previously defined set of elements. This may be done very easily inside BESTVIEW using the current option. When you select this option, BESTVIEW calculates the normal vectors at every node of the model. For nodes shared by several elements, a weighted normal is calculated. The system will ask you to enter a range of element numbers:

> Range may be given by <-> between the lower and higher numbers. Multiple ranges may be given in a line along with individual values separated by <,>. To END input, give a <.> at the beginning of a request.
>
> Give element numbers:

If the digitizer is ON, then instead of the above, the following is asked:

> Detect elements ((a)bort, (e)xit)

If you are selecting elements from the screen (for the digitizer ON mode), you may terminate the selection process by keeping the digitizer on the screen (the graphics window where the model is shown) and typing ‘‘e’’ on the keyboard. Similarly, typing ‘‘a’’ while keeping the cursor on the graphics window would abort recording any entry.

After elements have been identified, the system will highlight the selected elements and ask you to double check before performing the current operation:

> Select: <C>onfirm, <R>edo, <A>bort:

A character input is expected.

When you type ‘‘C’’ to confirm, the next query is:

> Select an ELEM. NO. for viewing the normal:

Give an integer specifying an element label. The normal is displayed in the center of that element. The direction may be visually identified, noting that it goes from the center of the element to the other end containing a red-cross. Again, BESTVIEW requires a confirmation:

```
Select: <C<firm, <R>edo:
```

In case the normal for the element selected was not explicit in defining its direction (especially if it is confusing whether it is coming towards you or turning away from you), you may use the Redo option by typing ‘‘R’’ and select another element for a better identification of the normal.

Now that the system knows which elements to copy and in which direction, the next query is:

```
Specify the amount to move (shell thickness)
```

A positive value will perform the copy option in the direction of the normal, and a negative value will copy in a direction opposite to the displayed normal. Now the elements are copied in the desired direction. Regarding the free edges, it is extremely difficult to define elements in the through thickness direction along the free edges. This is handled by the following queries:

```
Do you want shielding elements (<Y>/<N>)?
```

If you type ‘‘N’’, then the two sets of elements will not be interconnected. If you do a FREE EDGE CHECK, the system will show you free edges all around the periphery of the element range selected for NORMAL COPY. However, if you want shielding elements, type ‘‘Y.’’ The system will highlight the free edges of relevant elements and ask you:

```
Do you want shielding element for this edge:
(<Y>es, <N>o, <Q>xit creating any more):
```

If you type ‘‘Q’’, the system assumes that you do not want any shielding elements over the remaining edges (at that point in time) of the element group being copied. The following figures should clarify the concepts outlined above:

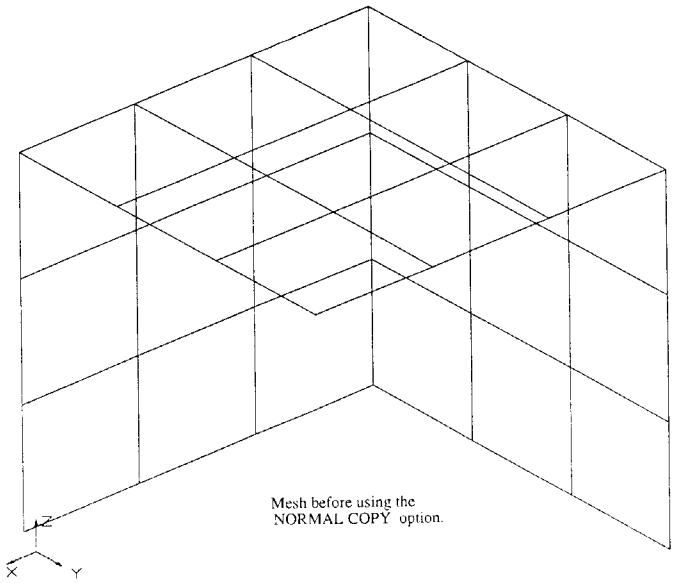

Fig. 4.5.4.1 The Elements to be Normal-Copied

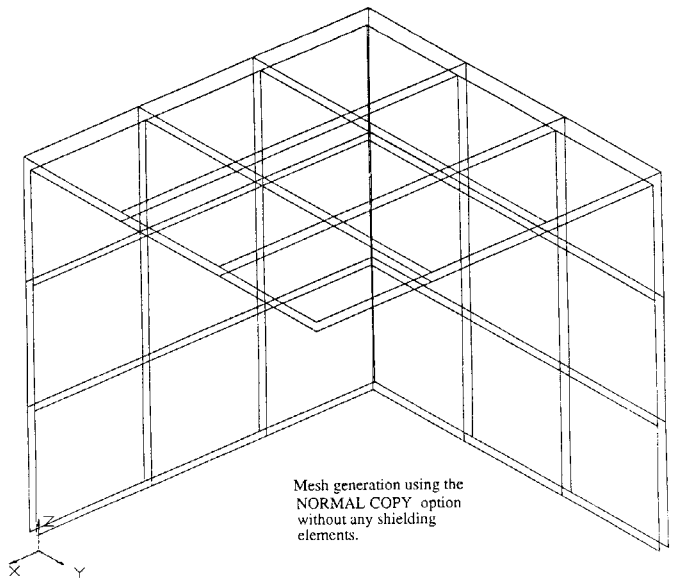

Fig. 4.5.4.2 The Original and the Copied Elements,
Without Using Any Shielding Elements

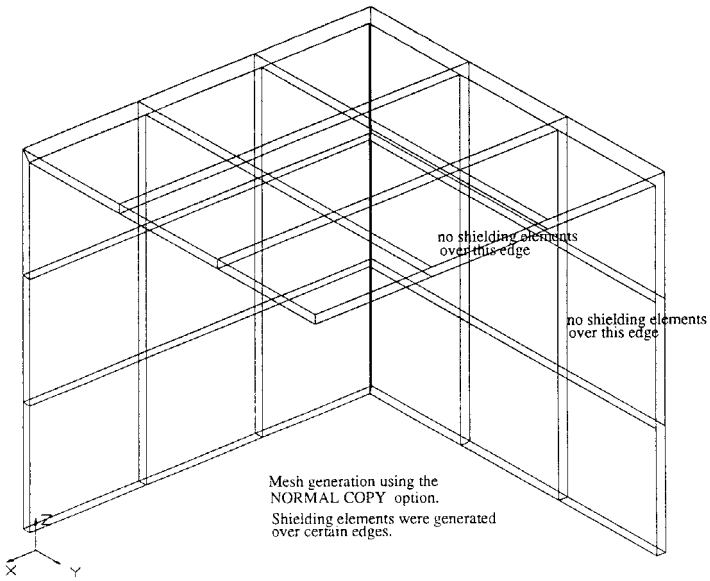

Fig. 4.5.4.3 The Original and the Copied Mesh
Using Shielding Elements Over Certain Edges

NOTE: If you wish to have shielding elements, before using the NORMAL COPY option, check the GENERATE MESH - TOLERANCE (Sec. 4.9) value. The shielding elements will produce 8-noded through thickness elements. Unless the tolerance is set low enough to accommodate a mid-node (not within the tolerance limits of the upper and lower nodes), there will be an error in the generation of such elements.

4.5.5 ROTATE

This option allows you to generate new elements by rotating existing elements about the active coordinate frame. The queries are:

Enter range of elements to rotate:

Give the lower element number and the higher element number to define the range or only one number to operate on a single element. If the digitizer is ON, you need to detect the required element to be rotated from the display.

Enter the rotation angle (x, y, z):

The most general entry would consist of three values. If you give only one value, rotation about y and z are considered as zero. Similarly, if you give 2 values, rotation about z is considered as zero. The rotation would be effective on the current configuration. You should also be aware that the rotation occurs about the active coordinate frame.

Sometimes, in order to get the desired mesh generation, it is necessary to define a new coordinate frame, make it active and then select the current option. The following figure should clarify this idea. Also refer to DEFINE GEOMETRY - COORDINATE FRAME options detailed in Chapter 2, if necessary.

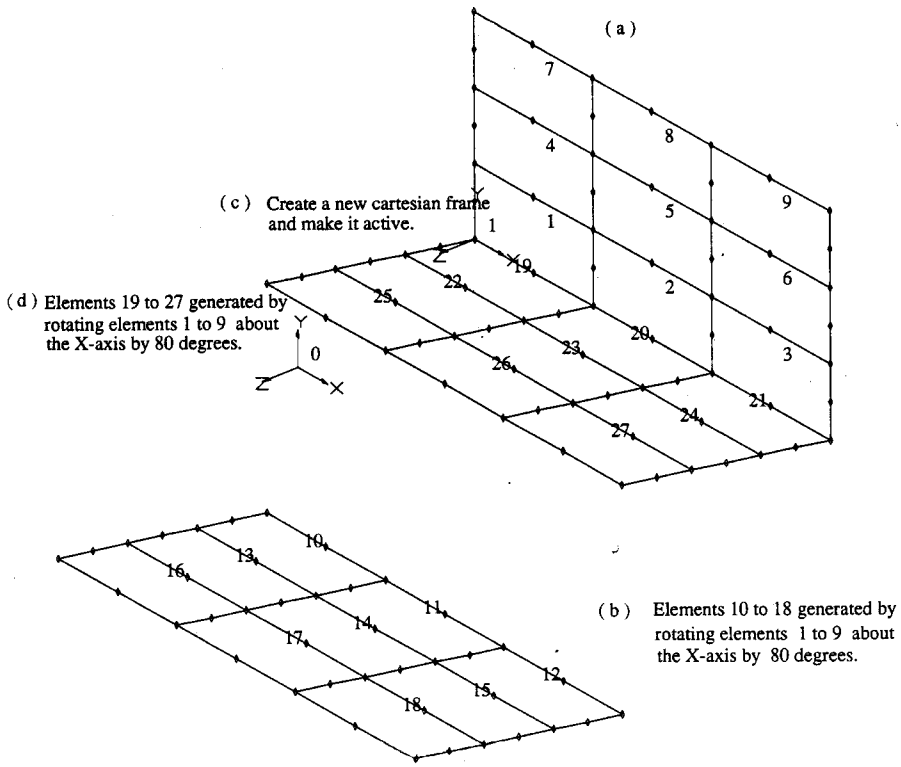

Fig. 4.5.5.1 Element Creation Through Rotation

4.5.6 SCALE

This option allows you to generate an element by scaling an existing element along all the axes systems. The queries are:

Enter range of elements to scale:

Give the lower and higher element numbers to define the range. If the digitizer is ON, then detect the required element to be scaled from the display.

Enter scale factor (x, y, z):

Scaling is performed with the given values. If you do not give a value, the scale factor is taken as 1.0 in that direction.

Remember that scaling is done on the current active coordinate frame. You may need to define a suitable coordinate frame and make it active before choosing the current option. A possible utility of this option is shown in Fig. 4.5.7.1.

4.5.7 TRANSLATE

You may create a set of elements by translating an existing set of elements along a specific direction. The queries are:

Enter range of elements to translate:

Give the lower and higher element numbers to define the range. If the digitizer is ON, then detect the required element to be translated.

Enter translation (x, y, z):

The new elements are created by translating the chosen elements by these values with respect to the active coordinate frame.

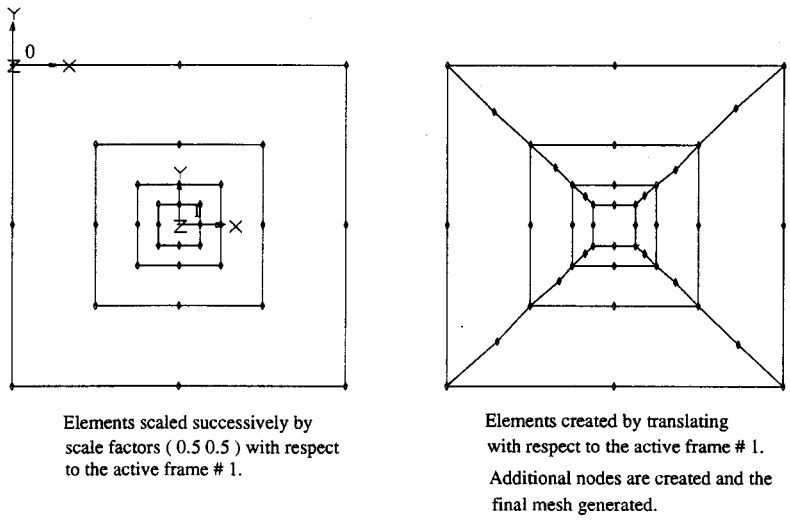

Fig. 4.5.7.1 Elements Created by Scaling and Translating Existing Elements with Respect to the Active Coordinate Frame

4.5.8 REVERSE

This option allows you to reverse the element connectivity sequence. Consequently, the element normals are also reversed. The starting node number, before and after reversal, is the same. The following queries are asked:

```
Enter beginning and ending element numbers:
```

Give the lower and higher numbers defining the range. If this digitizer is *ON*, then detect the element from the display.

4.6 EQUIVALENCE

When you define elements through the various available options and refresh your display with a DRAW/CDRAW, you may notice duplication of nodes (keep LABEL - NODES - ON) at places where there should be unique nodes. This happens especially along edges common to adjacent patches being meshed. The element connectivity sequence along these common edges do not contain the same node numbers; although each node pair, belonging to elements on either patch, would have an identical spatial location. The EQUIVALENCE option eliminates the above-mentioned duplication. It not only erases the duplicate node number from the database, but also redefines the element connectivity sequence of the affected elements. It also compacts the node numbering sequence, and any unreferenced nodes are deleted.

This option does not update nodal information existing in groups. It is strongly recommended to define groups only after equivalencing duplicate nodes over the entire model.

Having a clean model after executing this option, you may now proceed to define the additional mesh information in a GROUP if required.

Note that you may sometimes need to select the TOLERANCE option (see section 4.9) before selecting the current option to effect proper equivalencing.

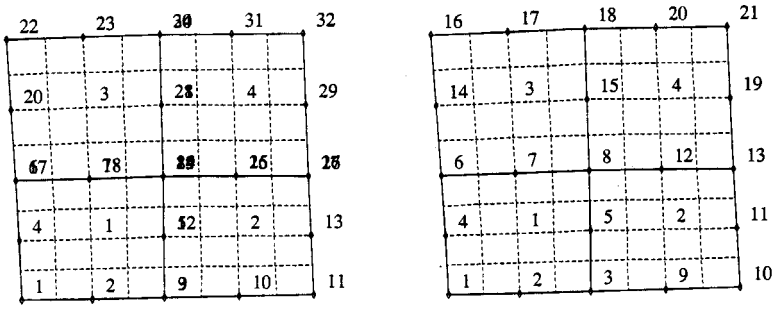

Before equivalencing.

After equivalencing.

Note that duplicate nodes are generated along common edges between adjacent patches.

Fig. 4.6.1 Result of Equivalencing

4.7 FAST MESH

Use of this option is the fastest way to generate mesh entities. FAST MESH operates on patch (i.e., surface) information residing in one or more GROUPS.

Before selecting this option, you should make a LIST of the existing GROUPS (see Chapter 2) and ensure that surfaces are defined in the proper GROUPS. For proper functioning of the option, ensure that the surfaces defined in each GROUP actually exist in the database. A very common mistake is to generate patches, put them in GROUPS; then delete certain patches and redefine new ones, but then forget to update the proper GROUPS. Use the PLOT-GROUP option (refer to Chapter 2) to show you the patches present in a specific GROUP.

Since BESTVIEW is tailored for GPBEST, you will not have line elements and quadrilateral (or triangular) elements over the same model. Therefore, your GROUPs will contain either line elements or quadrilateral (and maybe triangular) by processing line and patch entities respectively. But if you do have a mix, first define the various groups containing 4-sided (and 3-sided) patches and then define groups containing lines. Be careful not to define any more groups containing patch information after a group (or several groups) containing line definitions.

When you select this option, the system would ask you to:

Give search radius:

A real number is expected. A value that generally works well is 0.1.

and then ask for the mesh density:

Give mesh density for patches (n):

One integer are expected.

FAST MESH then processes each GROUP, takes each patch under that GROUP and meshes it according to the given density. Note that the same mesh density is applied to all patches of all the GROUPs. Hence, a compatibility of patches (see Fig. 4.7.1) will ensure compatibility of adjacent elements. The search radius helps BESTVIEW to equivalence nodes between adjacent patches and clean mesh information is generated for each GROUP.

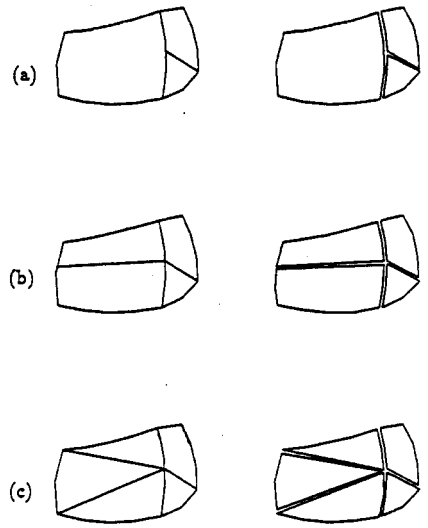

Figure showing (a) "incompatible"
and (b) and (c) "compatible" elements

Fig. 4.7.1 Compatibility of Patches and Elements

This option automatically places the relevant mesh information into the proper GROUPs. Since each GROUP is thought of as a GMR (in terms of GPBEST), define the patch (or line) separating adjacent GROUPs in both of them. This will ensure compatible mesh information in adjacent GROUPs, and hence, in adjacent GMRs. This helps in the data generation process for GPBEST (refer to Chapter 5). Note that whereas equivalencing was internally done on each GROUP, there would be duplicate nodes and elements at the interface between adjacent GROUPs. They should not be externally equivalenced (by the EQUIVALENCE option described in 4.6). If you need to add additional mesh information through the CREATE-ELEMENT or ELEMENT-CREATE options, work with FAST MESH on a single GROUP. Then, save the model (refer to Chapter 7) containing only one GROUP (or GMR). Eventually, bring in all such component models by using the ASSEMBLE MODELs option (refer to Chapter 3).

4.8 NODE

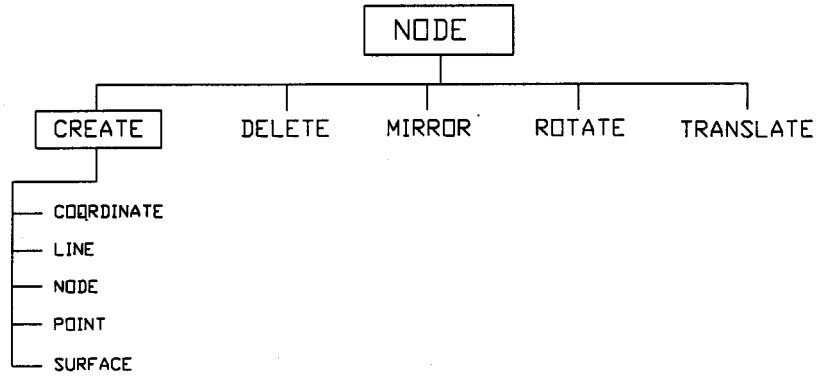

There are many ways to create nodes. Each option will be detailed in the following sections.

4.8.1 CREATE COORDINATE

You may create a node by giving the coordinates with respect to the active coordinate frame. If the digitizer is *ON* then you may select the location of the node on the screen (the x, y coordinates are taken from the screen position, z value is that which is set through DIGITIZER Z VALUE option). The system prompts are:

Enter new node number:

An integer is expected. Generally, the next available node number is shown by the system. For the most part, you should click the OK button at this point. If you give an existing node number and give the x, y, z coordinates in the next query, the effect would be to *move* the node from its previous spatial position to the present location.

Enter x, y, z coordinates:

Give 3 values defining the location of the new node. If a value is omitted, then it is taken as zero. If the digitizer is *ON*, then you are asked to detect a location on the screen. However, you should be aware of the fact that any screen detection will give the x, y position, and z is always considered as the value set through DIGITIZER Z VALUE option (refer to chapter 2).

4.8.2 CREATE LINE

This option creates a node lying on the geometrical line entity closest to a location (x, y, z) specified by you. The system queries are:

```
Enter new node number:
Enter line number:
Enter coordinate (x, y, z):
```

If the digitizer is ON, you will have to detect the relevant line from the screen and detect coordinates on the screen or enter p and detect a point from the display. Again note that, any detection of coordinates from the screen will give the x, y location with z being defined through DIGITIZER - Z VALUE option (see Chapter 2, if required). A new node will be generated as the normal projection of the selected point on the selected line or the position on the screen. If the projection fails, a node will be generated at the start or end of the line, depending on whether the point (or position) is near the start or the end of that line.

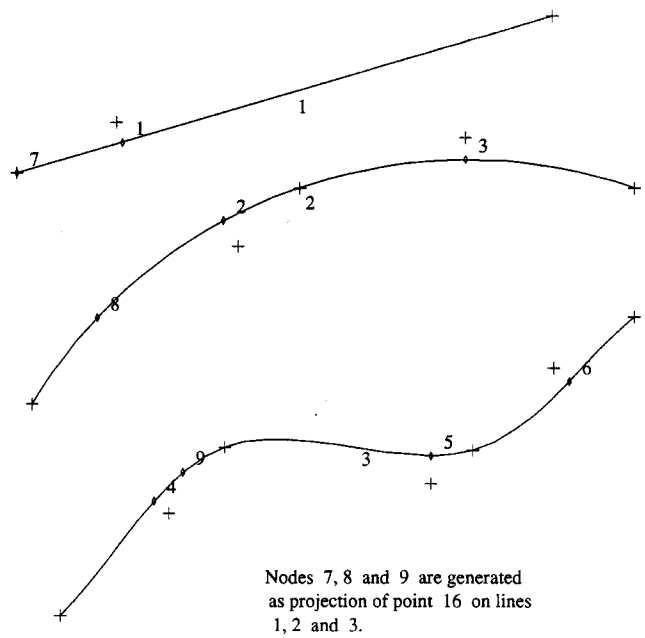

Fig. 4.8.2.1 Nodes Created as Projection of Points on Lines

4.8.3 CREATE NODE

This option assists in generating a coincident node. The system queries are:

```
Enter new node number:
Enter node to move to:
```

Each query requires an integer input. If the digitizer is *ON*, then instead of responding to the second query, you would have to detect the proper node.

4.8.4 CREATE POINT

The purpose of this option is to create a node over an existing point. The system queries are:

```
Enter new node number:
Enter point number:
```

Both the queries require an integer input. If the digitizer is *ON* then in place of the second prompt, you would have to detect a point from the display.

4.8.5 CREATE SURFACE

This option is useful if you need to create a node as a projection of a point on a surface. The system will ask:

> Enter the new node number:
> Enter surface number:
> Enter coordinate (x, y, z):

Give an integer for the first query if you want to differ from the number displayed by the system. Enter an integer for the second query, or select the surface from the display if the digitizer is turned ON. Give the coordinate of a position, which will be used for the projection onto the surface, to create the node. If the digitizer is ON, you must detect the position from the screen (this gives the location of x, y and z has the value set by DIGITIZER - Z VALUE option), or enter p and select the point which will then be projected to create the node.

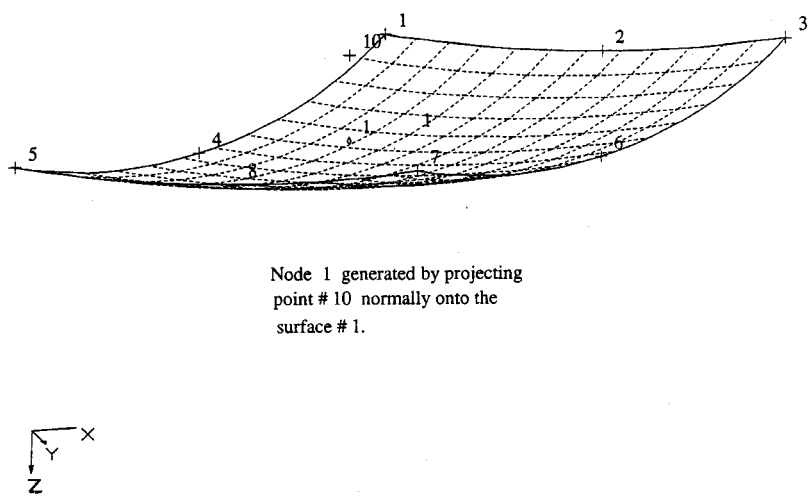

Fig 4.8.5.1 Generation of a Node on a Surface

You should note that, if the position defined through the (x, y, z) input or if the point detected is outside the surface on which the projection is requested, the system gives the following error message:

> Cannot intersect a line/surface with itself

Click the CONTINUE button.

4.8.6 DELETE

Whenever you want to delete nodes, select this option. You can detect nodes to be deleted, one by one, if the digitizer is ON. Otherwise the system will ask:

```
Enter beginning and ending node numbers:
```

Give a lower and a higher node number to define the range of nodes to be deleted. A single input would delete only the node specified

4.8.7 MIRROR

This option allows you to create a new node by mirroring an existing node about any one of the 3 axes-planes (xy, yz, zx, respectively) of the active coordinate frame. The queries are:

```
Enter new node number:
Enter node to mirror:
Enter mirror plane:
```

For the first query, the system shows the next available node number. The usual procedure would be to click on the OK button. Give the node number to be mirrored or detect it from the display if the digitizer is ON. For the third query, give a two character input. The available options are displayed.

4.8.8 ROTATE

If you need to create a node by rotating an existing node about an active coordinate frame, click on this option. The system queries are:

```
Enter new node number:
Enter node to be rotated:
Enter the rotation angle (x, y, z):
```

For the first query, the system shows the next available node number and usually you would click the OK button. Give the node to be rotated, or detect it from the screen if the digitizer is turned ON. For the third query, give the three rotation values. Skipping a value would imply rotation about the corresponding axis is zero.

4.8.9 TRANSLATE

Select this option to create a node by translating an existing node along the active coordinate frame axes. the system queries are:

```
Enter new node number:
Enter number to translate:
Enter translation (x, y, z):
```

Give an integer for the first query or select OK to accept the default value. Give the node number or select the proper node for the second option and enter the translation values effective on the active coordinate frame. If you skip a value, the translation amount in the respective direction will be zero.

4.9 TOLERANCE

You can change the tolerance value with this option. The system will show the current tolerance and ask:

```
Enter tolerance:
```

The tolerance value is necessary for equivalencing of nodes through the EQUIVALENCE option. The default tolerance is set at 0.005.

4.10 TRANSITION

Given the subdivision pattern over the four edges of a four-edged patch, this option generates a matching mesh pattern over the surface. The subdivisions along each edge are all equal (i.e., bias value = 1.0). An important pre-requisite for using this option is that the sum of all the subdivisions on all four edges should be an even number. The system queries are:

```
Enter the surface number:
```

Give the surface to be meshed. If the digitizer is ON, detect the surface from the display.

```
Enter number of elements along n1:
Enter number of elements along n2:
Enter number of elements along n3:
Enter number of elements along n4:
```

For each of the above queries, give the subdivision number along each edge. The n_1, n_2, n_3, n_4 indicated above are the edge numbers of the chosen surface which are highlighted when the entry is being made. The above four values, when summed up, should be even.

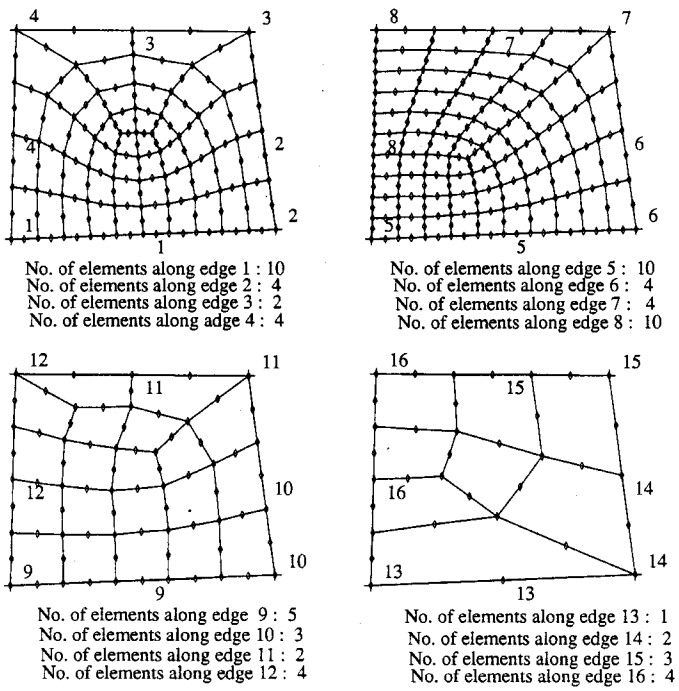

Fig. 4.10.1 Various Meshing Patterns Using the TRANSITION Option

4.11 QUALITY CHECK ATTRIBUTES

Once the patch level information is generated for a model, most of the commercial software in the current market would help the user to mesh the model through automatic, semi-automatic or manual techniques. Based on the quality of the mesh, generated results from the analysis may vary substantially, especially if the mesh is ‘‘bad’’ at places of stress variation. To qualitatively ascertain the mesh quality, the current option may be used at the pre-processing or the post-processing stage. Basically, there are three different ways to arrive at this option:

a) Generate the model in BESTVIEW. Use manual meshing techniques or the FAST MESH option. Before generating data for analysis, use the current option and modify the mesh if necessary.

b) Use the IMPORT option to bring mesh information of a model from I-DEAS or PATRAN, two very commonly used commercial softwares, or use the IGES option to bring mesh information through the IGES/PDES protocol. Before generating data for analysis, use the current option.

c) At the post-processing stage, use the READ GPBEST RESULT option to bring information from a GPBEST Neutral file. Scan through the results by looking at necessary fringe and contour plots. If the results seem to be improper, check the element quality attributes for the mesh used in the vicinity of the areas containing the ‘‘unwanted’’ results.

When you select the current option and there is no mesh information in any defined GROUP, the following message comes:

> Error! Element quality check can only be done after defining elements in GROUPS.

Let us assume that you have mesh information defined in relevant GROUPS (An easy way to check this is to use LIST - GROUPS option which shows how many groups have been defined and the contents of each group).

When you select the current option, the system will respond in one of the following two ways:

a) If you have not already selected the GROUPS - QUALITY CHECK option:

> Loading up quality check information for ALL groups.
> If checks on individual GROUPS are required, select GROUPS - QUALITY CHECK option.

b) If you have already selected the GROUPS - QUALITY CHECK option and defined the GROUP for which you wish to see the quality checks, there is no message.

The following sub-options come on the menu-system:

1. DEACTIVATE
2. MIN. ANGLE
3. MAX. ANGLE
4. WARPAGE ANGLE
5. TANGENT MIDNODE
6. NORMAL MIDNODE
7. JACOBIAN RATIO
8. SEVERITY
9. CHANGE RANGE

If you select GENE.QUAL UP option, you will be taken back to the GENERATE MESH menu. You may select any other menu option (especially in the post-processing stage) but you can come back to the current option. The results of the quality checks of all elements in the active group (or all groups) that you saved previously are still there until you change a group through the GROUPS - QUALITY CHECK option.

4.11.1 DEACTIVATE

This option deactivates the current mode you are in and returns you to the mode you were in before choosing the specific quality check. It is a convenient way to stop the quality checks. For example, if the current mode is FRINGE PLOT, you can verify the element quality by selecting GENERATE MESH ⇒ QUALITY CHECK. A variety of quality checks can be performed from this menu. Once you are done with the quality checks, you can get back to the FRINGE PLOT mode by choosing DEACTIVATE.

4.11.2 MIN. ANGLE

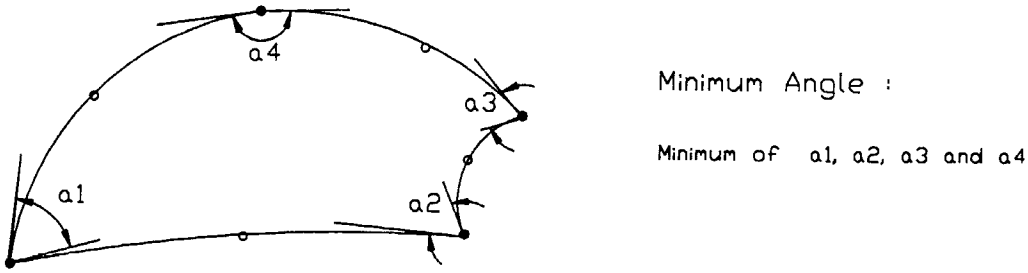

Fig. 4.11.2.1 The MIN. ANGLE Check

Elements which are extremely skewed or distorted may be detected through this check. Tangent vectors are constructed at the element corners to the two adjacent sides. The angle between

these vectors is the internal angle at that corner. The minimum of these internal angles for all corners of the element is taken as the MIN. ANGLE for that element. Give a DRAW or CDRAW to see the variation over the model.

4.11.3 MAX. ANGLE

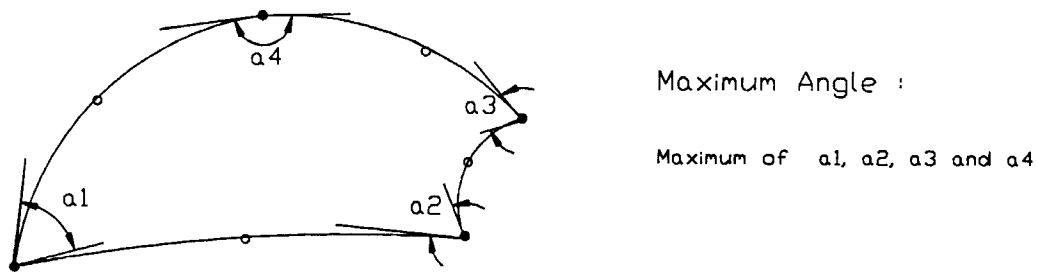

Fig. 4.11.3.1 The MAX. ANGLE Check

As mentioned in Sec. 4.11.2, the internal angles are calculated at the corners of an element. The maximum of these internal angles for all the corners of the element is taken as the MAX. ANGLE for that element. Give a DRAW or CDRAW to see the variation over the model.

4.11.4 WARPAGE ANGLE

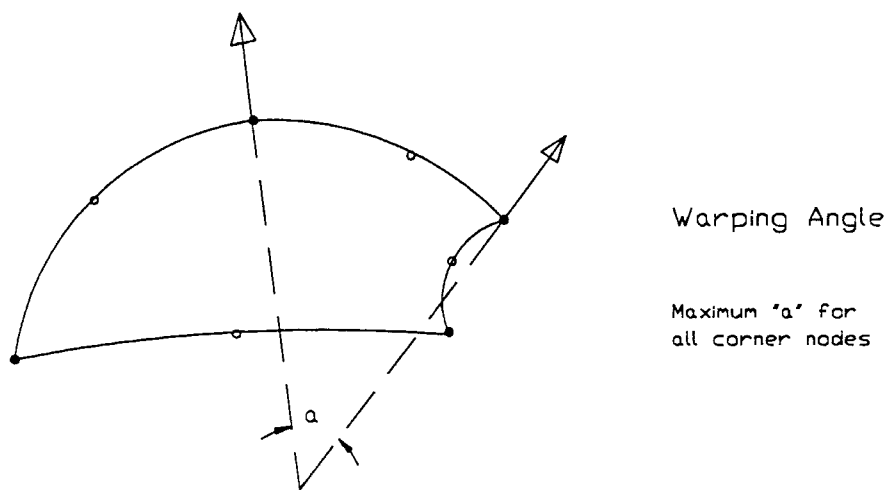

Fig. 4.11.4.1 The WARPAGE ANGLE Check

This check identifies elements that are excessively twisted from an average plane passing through the element corners. We compute the relative twist between the various corners. Normal vectors are constructed at the element corners. The maximum angle between any two of these normals is defined as the warpage angle for that element. Give a DRAW or CDRAW to see the variation of WARPAGE ANGLE over the model.

4.11.5 TANGENT MIDNODE

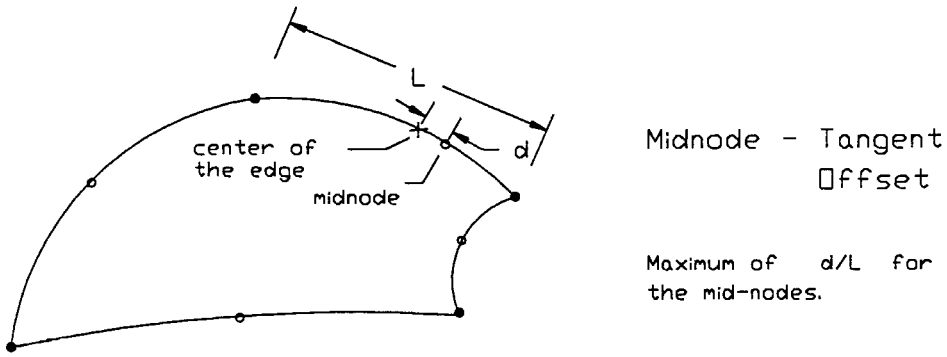

Fig. 4.11.5.1 The MIDNODE Tangent Offset Check

This is really a check for the tangent offset of the midnodes of an element. The deviation of the midnode from the middle of the edge is calculated. Ideally, the value should be zero. However, you need to consider a ‘‘quarter point’’ concept in DLT Fracture elements (see GPBEST manual). The maximum value of the tangent offset of all the midnodes of an element is taken as the element value. Give a DRAW or CDRAW to observe variation of this attribute over the model.

4.11.6 NORMAL MIDNODE

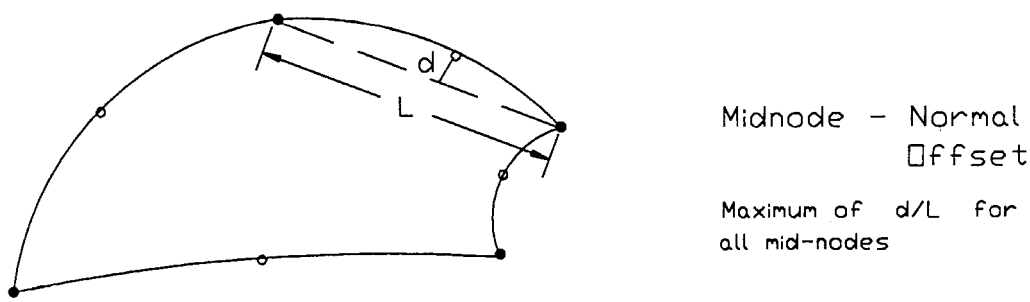

Fig. 4.11.6.1 The MIDNODE Normal Offset Check

This check calculates the perpendicular projection of the midnode on a straight line joining the adjacent corner nodes of an element. Elements with high curvatures would be caught in this test. The maximum value for the normal offset at all the midnodes is considered to be the element value. Give a DRAW or CDRAW to see the attribute variation over the model.

4.11.7 JACOBIAN RATIO

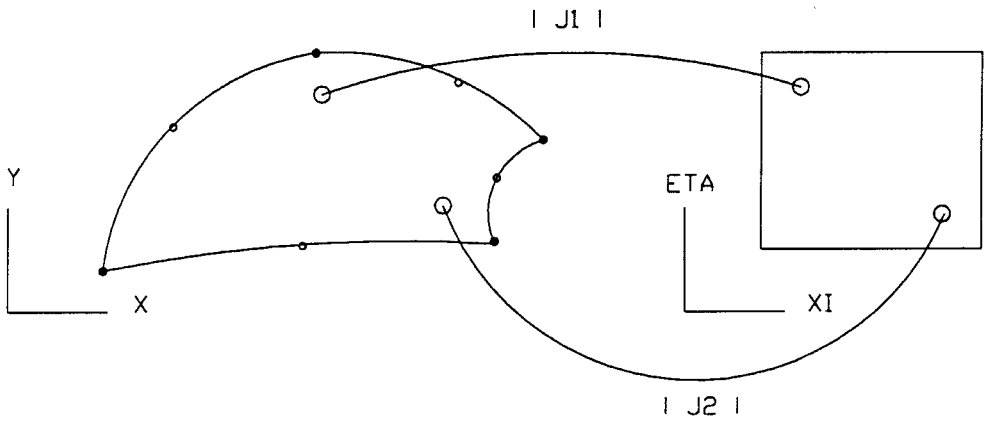

Jacobian Ratio :

$$\text{Max} \frac{|J1|}{|J2|}$$

Fig. 4.11.7.1 The Jacobian Ratio Check

For every element, a number of Gauss points are chosen and the determinant of the Jacobian is calculated at those points. The ratio of the maximum determinant to the minimum determinant is reported as the value for that element. This check will identify skewed and distorted elements. Give a DRAW or CDRAW to see the variation of this attribute over the model.

4.11.8 SEVERITY

Thus far, you have been instructed on how to visualize the quality check attributes, one at a time, over your model. Many times, it is necessary at first to see whether there are any elements which fail a pre-selected criteria for the different quality attributes. If all the elements pass the chosen set of criteria, there really is no need to probe into the individual checks. However, certain elements could fail to comply with the chosen criteria. To identify such elements in the whole model, use the current option. The system will ask:

```
Select SEVERITY level <1>low, <2>medium, <3<high:
```

An integer is expected.

The pre-selected criteria for the SEVERITY levels are as follows:

Level	Min.Angle	Max.Angle	Warp.Angle	Nor./Tan.Offset	Jacob.Ratio
LOW	5 (6-noded) 10 (8-noded)	165	90	0.25	10
MEDIUM	10(6-noded) 15(8-noded)	155	80	0.15	8
HIGH	15 (6-noded) 20(8-noded)	145	70	0.10	6

All angles are in degrees.

When you give a DRAW or CDRAW, the system displays a list of only those elements which fail to comply with the chosen criteria. It also computes the number of attributes which an element fails (the SEVERITY CODE) and provides a visual interpretation of the same. Thus, an element passing all checks will have a severity code 0, while one failing in the Min. Angle, Warp. Angle and Jacobian ratio check will have a severity code 3. The maximum severity code an element can have is 6 while the minimum is 0.

Note that since the display works with HIDDEN ON mode, you may get an element with a high severity code in the listing, but that element may not be visible. To identify the location, do the following:

1. Select DEACTIVATE
2. Select DISPLAY OPTIONS - HIDDEN - OFF
3. Give a CDRAW
4. Select HIGHLIGHT - ELEMENT. Give the element number from the previous listing. This should identify the location of the required element over the model. Use the VIEW - OPTIONS - ROTATE; CDRAW and HIGHLIGHT options to display the required element (check it by HIDDEN - ON and HIGHLIGHT options).

4.11.9 CHANGE RANGE

In the last section (4.11.8), choosing a pre-selected criteria for evaluating element quality was discussed. The three options and their values for the different element quality attributes were also given. If you wish to verify a certain quality check against some other value, use the current option.

Suppose you select the JACOBIAN RATIO option followed by a CDRAW. The labels on the right indicate the minimum and maximum value encountered in the model and each color level will be appropriately labeled. If the maximum is 8.5, the minimum is 2.6 and the topmost level (red color) is between 7.1 and the maximum. Now, if you wish to identify all elements with a Jacobian Ratio which is less than 4.0, select the CHANGE RANGE option. The system will ask:

```
Enter function range (lower, upper lowest):
```

For the purpose of an illustration, 0.4 is entered. In passing, please note that any value less than the minimum will be taken as the minimum and any value more than the maximum is taken as the maximum. Now, a CDRAW or DRAW will identify all the elements with a Jacobian ratio greater than 4.0 as red (or the topmost level's color).

Your range values will be reset by the model's maximum and minimum once you select the parent option again. For the above example, selecting the JACOBIAN RATIO option again will color-code the attribute considering a minimum at 2.6 and the maximum at 8.5.

4.12 BREAK MODEL

In the context of a boundary element analysis (using GPBEST), it may sometimes be necessary to break a complex model into several sub-models (GMRs, as we know in GPBEST). Although the current option is not developed to its full potential, occasionally you might come across a model where you might want to break it along a plane. If the existing mesh is such that you can identify a ring of element edges along the plane where the break is to be made. Then this option allows you to automatically generate an interior mesh on the break-plane. However, currently there can be only one closed curve on the break-plane, formed by the edges of the elements over the outer surface. For example, a solid shaft can be operated on (provided affected element edges be on a plane), but a thick annular shaft cannot be broken with the current option.

If you are able to use this option, then the first step is to select nodes to form a closed curve; this forms the break (or cutting) plane.

If the program needs to subdivide any input edge of the existing mesh, you would be informed (as this requires a breaking up of original elements on the model surface to be subdivided in a compatible manner).

Figures 4.12.1 and 4.12.2 clarify the utility of this option.

Note that if you had any previous group definitions, it is advisable to delete these groups (but not the entities!) before using the BREAK-MODEL option, just to avoid confusion. Once the interior mesh is obtained using this utility, you may select the required elements and define the necessary groups. Refer to GROUPS-ADD ENTITY option.

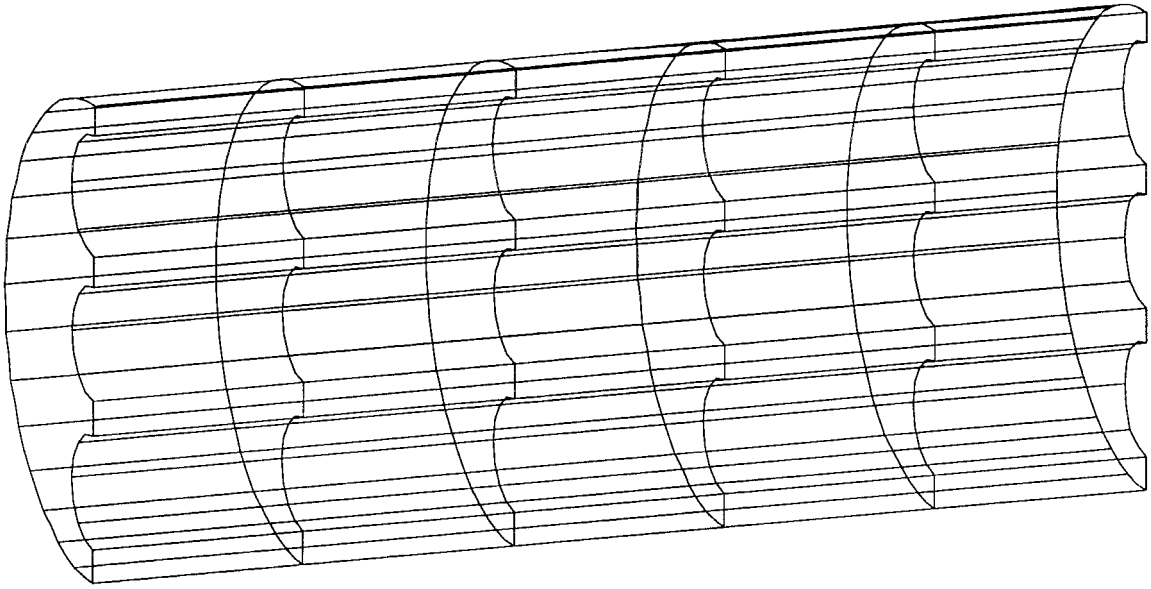

Fig. 4.12.1 Before BREAK-MODEL

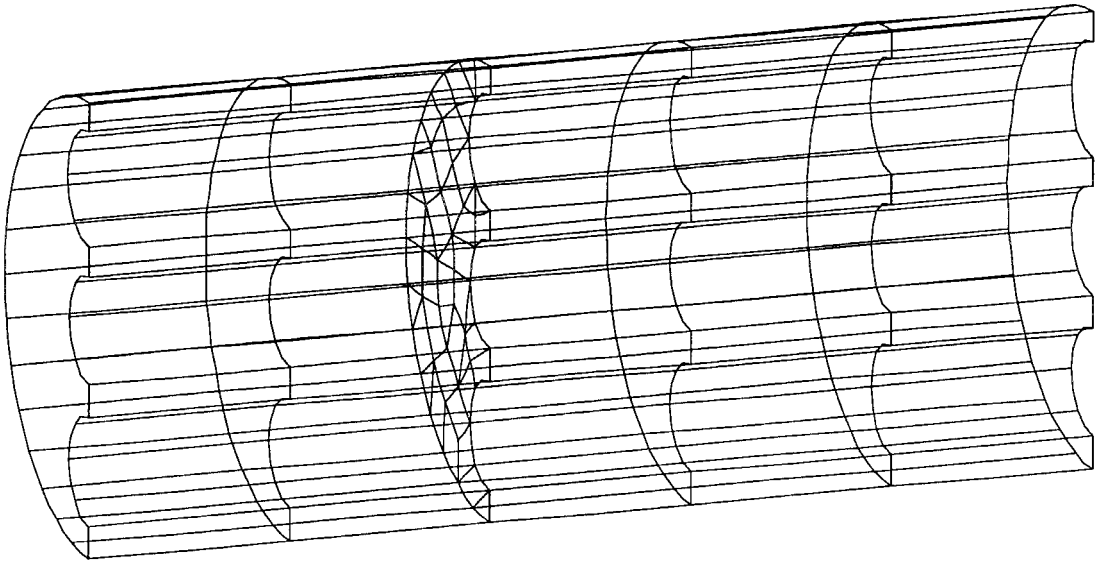

Fig. 4.12.2 After BREAK-MODEL

4.13 LIMITATIONS

1. When you are using the FAST MESH option:

   (a) Up to 9000 geometrical lines
   (b) Up to 9000 geometrical surfaces
   (c) Up to 9000 nodes
   (d) Up to 20 groups

2. Sum of the subdivisions on the four edges of a patch should be even when using the TRANSITION option. This option does not work on three-edged patches.

5.0 PREPARING DATA FOR GPBEST

5.1 INTRODUCTION

Since BESTVIEW is primarily aimed at providing a pre and post-processing capability for the Boundary Element Software, GPBEST, a thorough understanding of this section will be very helpful in generating proper data for the analysis module. At the outset, it should be clarified that BESTVIEW and GPBEST are independent modules and the datafile generated with the help of this section is an ASCII file, which can be modified before running the analysis module. So even if you make a mistake while dealing with the options of this section, you should continue with the data generation process and correct the mistake later in the datafile before running GPBEST.

By this time, you should have mesh information in the BESTVIEW database either by building the model and using the GENERATE MESH commands or by importing a model file from another CAD/CAM software through IGES and then using the GENERATE MESH commands.

In the event that mesh information (Nodes and Elements) is absent in the database, the system will report an error message and will return you to the main menu. In other words, you will not be able to go through the options described in this chapter unless you have proper mesh information at the outset.

5.2 PREPARE ANALYSIS OPTIONS

Preparation of data for GPBEST from the model in the current BESTVIEW database begins by clicking the PREPARE-ANALYSIS option of the MAIN MENU. Provided you have mesh information in the BESTVIEW database, you will see the following information in the command window:

> Generation of GPBEST data .....
>
> To abort data preparation press <A>
>
> Press any other key to continue:

If you do not wish to continue with the process of data preparation, enter '*A*'. For continuation with the data generation process, hit the return key.

Since BESTVIEW allows the data generation in multiple sessions, if you are trying to generate data for anything other than the initial session, the following message appears on the command window:

> The datafile exists. Do you want to APPEND?
>
> If <Y>es, then all subsequent data would be added to the end of the existing file.
>
> If <N>o, then the existing file would be OVERWRITTEN.
>
> Please give <Y> or <N>:

Information processed in this section is stored in *file*.DAT. where *file* is the name of the file you gave when you started BESTVIEW. Cases in which you might want to OVERWRITE this .DAT file are:

1. Starting the datafile generation afresh.
2. There were some unwanted modifications to the datafile.
3. The model has been changed, and consequently the old .DAT file is no longer valid.

Cases for which you might want to append the .DAT file are:

1. The boundary conditions were not fully described in a single session.
2. You edited the .DAT file and want to append some additional information at the end.

Incidentally, when you enter into PREPARE-ANALYSIS for the first time and exit the process, three files are generated by the system:

1. *file*.DAT, which is the datafile.
2. *file*.EER, which stores warning messages, if any. Two types of warnings, both related to the aspect ratio of elements, are given:
   (a) If aspect ratio of a 6-noded triangular element exceeds 6.
   (b) If aspect ratio of an 8-noded quadrilateral element exceeds 10.
3. *file*.TMP, which is required if you want to work on the datafile generation in multiple sessions. It contains information defined in the datafile up to the previous session. If you edit the .DAT file, this .TMP file does not get updated. As a result, the next session, BESTVIEW will have all the information as if it had not been edited. You should not be concerned about this if you edited values of tractions or other boundary conditions, or changed some material property. But in case an entry was modified under the **GMR section (described later) or changed a direction of a **BCSET (described later), then you should be aware of this limitation.

If you should make a drastic mistake while generating the datafile, or simply want to start afresh, come out of PREPARE-ANALYSIS and go in again, this time opting to OVERWRITE the .DAT file. As far as storing the three files is concerned, the .EER file is for your information and you may delete it. The .DAT and .TMP go together in multiple sessions. Once you finish working with PREPARE-ANALYSIS and want to run GPBEST with the .DAT file (or manually edit the file), you can delete the .TMP file.

5.3 LIST OF OPTIONS

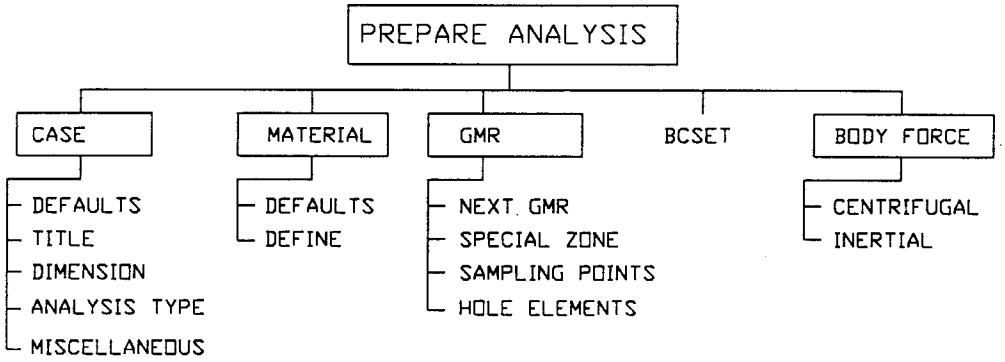

The GPBEST input structure is divided into several keywords, each preceded by "**". These basic keywords (such as CASE, MATERIAL, GMR, etc.) form the opening menu for PREPARE ANALYSIS. Each keyword is thoroughly explained in the GPBEST Manual. The basic means of getting the correct keyword along with proper attributes is the main focus of subsequent section. The selection of the keywords should be done in the following sequence:

1. CASE
2. MATERIAL
3. GMR
4. BCSET
5. BODY FORCE

Should you forget about the sequence, the system will indicate the proper procedure. The sequence is important; the subsequent options will change depending on what you choose. The GPBEST manual contains additional information about each of the options and sub-options.

5.3.1 CASE

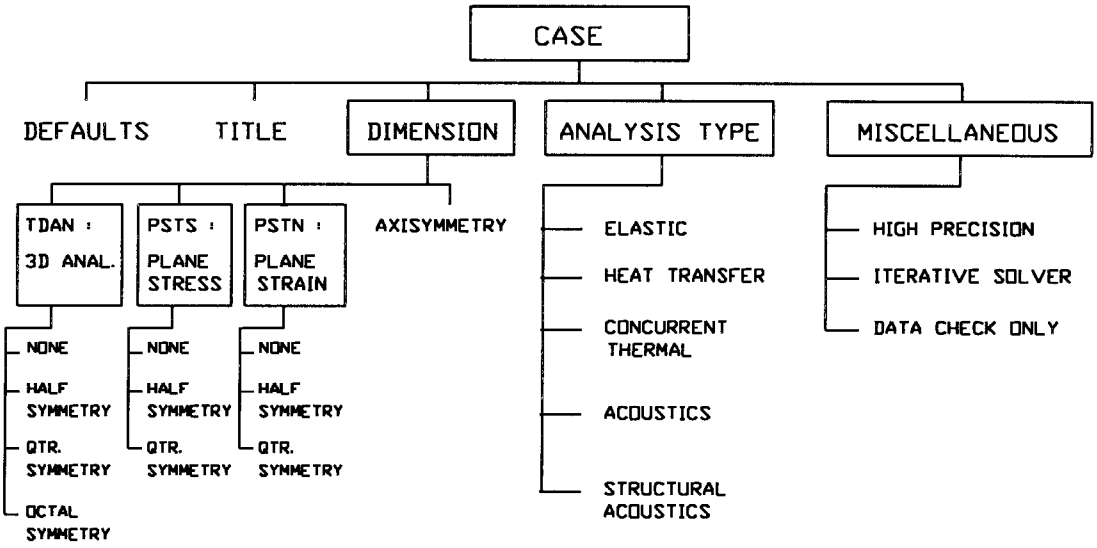

5.3.1.1 DEFAULTS

This is the most expedient manner to perform an elastostatic analysis on a 3D model without axes of symmetry. If you select this option, the following lines are written to the .DAT file:

```
**CASE
TITLE    DEFAULT TITLE
ELASTIC
TIME 1.0
ECHO
NEUTRAL
```

Select PREP.CASE UP to exit out of the CASE option.

5.3.1.2 TITLE

Give the problem title (within 70 characters) when you select this option.

5.3.1.3 DIMENSION

Depending on the dimensionality of the problem, select one of the following:

1. TDAN: 3-D ANALYSIS
2. PSTS: PLANE STRESS
3. PSTN: PLANE STRAIN
4. AXISYMMETRY

The system will now give you a choice of symmetry options based on your selection.

For TDAN, the options are:

(a) None
(b) Half symmetry
(c) Quarter symmetry
(d) Octal symmetry

For PSTS and PSTN, the options are:

(a) None
(b) Half symmetry
(c) Quarter symmetry

If you select NONE, the system will record the information and return to the level: PREP CASE DIME.

If you select HALF SYMMETRY, the system will ask you for the axis name (options are shown in brackets):

Give AXIS perpendicular to the plane of symmetry: $(x/y/z)$:

A single character input is expected.

If you select QUARTER SYMMETRY, the system will ask you for the axes-pair:

Give AXES perpendicular to the planes of symmetry: $(xy/yz/zx)$:

Two character input, without blanks in between is expected.

If you select AXISYMMETRY, the following queries need to be answered:

Is there a plane of symmetry (Y/N)?

If you enter ‘N’, then it is the same as not selecting this option at all.

If you enter ‘Y’, then the system will ask:

Give AXIS perpendicular to the plane of symmetry $(x/y/z)$:

A single character input is expected.

Select PREP.CASE.DIME UP to come back to the basic CASE options.

5.3.1.4 ANALYSIS TYPE

Depending on the type of analysis you wish to perform through GPBEST, select any one of the following:

1. ELASTIC
2. HEAT TRANSFER
3. CONCURRENT THERMAL
4. ACOUSTICS
5. STRUCTURAL ACOUSTICS

Based on your selection, the system queries will vary in the subsequent definition of materials and boundary conditions. For example, you will be asked about the speed of sound while defining materials if you select ACOUSTIC here. Similarly, the conductivity value of the material will be requested if you choose CONCURRENT THERMAL analysis. While declaring the boundary conditions, the system will not ask you for flux or temperature if you select the ELASTIC option. In other words, the system will give you appropriate options based on the ANALYSIS TYPE you select.

5.3.1.5 MISCELLANEOUS

The following options are available at this point:

1. HIGH PRECISION
2. ITERATIVE SOLVER
3. DATA CHECK ONLY

Each of these are thoroughly explained in the GPBEST manual for reference. In general, most of the time, you may require the DATA CHECK ONLY option for preliminary checking of input data for GPBEST. Selection of this option will produce a line containing the word ‘‘CHECK’’ in the .DAT file. After a preliminary run, if you find that the data is okay, you may delete this line from the GPBEST .DAT file and submit the job for the actual run.

If you are working with a 2-D model, the system will automatically place a CONT (for CONTOUR) card at the end of the CASE input. To come out of the CASE option, select PREP.CASE UP.

An important point to note is that only after you select PREP.CASE UP are the attributes concerned with the ‘‘**CASE’’ keyword written to the .DAT file. So, you can go on selecting whatever you want inside the CASE menu, but the final options selected are the ones written to the .DAT file.

If the analysis type chosen in Section 5.3.1.4 is ACOUSTICS or STRUCTURAL ACOUSTICS, when you come out of the CASE option, BESTVIEW will automatically ask the following:

<u>Sub-option 1</u>:

Select any one of the following:

PREP.CASE.ACOU UP

1. DIRECT
2. INDIRECT

Click on the option you need. If you select the PREP.CASE.ACOU UP option, the default is ‘‘DIRECT.’’ The Direct and Indirect acoustic formulations are documented in the GPBEST manual.

For a structural acoustics problem, the following question is asked:

Choose from: <O>ne-way-coupling, <F>ull-coupling:

A single character input is expected.

If the problem is a structural-acoustics problem and all the GMRs define the acoustic domain, the user may select the one-way coupling option if the normal displacements of the structural results are available. In such a case the following question is asked:

Do you want an NDFILE (Y/N)?

A single character input is expected.

In case an NDFILE (Normal Displacement File) is required, BESTVIEW would ask:

Give the name of the NDFILE:

A character string is expected (up to 70 characters).

Use of the NDFILE:

If you decide to use the results of a purely structural run for prescribing velocity boundary conditions for the acoustic domains (single domain for Indirect BEM; multiple domains for Direct BEM), you may use the NDFILE option. (For more explanations, please see the GPBEST User's Manual). In such a case, note the following:

1. The patch information of the structural shell model must be imported into BESTVIEW using the IGES translator. These patches can then be meshed inside BESTVIEW to define the acoustic domains. This is currently the only way to ensure that the structural results (on a finer mesh defined over the same patches) has a bearing on the acoustic model.
2. Hence two files should be stored from the purely structural run:
   i. IGES dump of the patch level information
   ii. Results file to be converted to the NDFILE format defined in the GPBEST manual.

<u>Sub-option 2</u>:

Select any one of the following:

PREP.CASE.ACOU UP

1. FH: FREQ HERTZ
2. FR: FREQ RADPS
3. SH: FREQ STEP HERT
4. SR: FREQ RADP

Click the option you need. If you select the PREP.CASE.ACOU UP option, the default is ''FREQ STEP HERT'' with 1 Hz input.

Select ''FREQ HERTZ'' option if you want discrete frequencies in Hertz. For values in radians per second (rps), select ''FREQ RADPS.'' The system will then ask:

Discrete frequencies are being defined:
Give the number of frequencies (< 20): n
Freq. #1: value is: val 1
Freq. #n: value is: val n

The first input is an integer and the rest are real.

Select ‘‘FREQ STEP HERT’’ option if you want a regular frequency sweep in Hertz. For the same result in radians per second (rps), select ‘‘FREQ STEP RADP.’’ The system will then ask:

Frequency sweep is being defined:
Starting frequency: f1
Ending frequency: f2
Frequency step: f3

Note that the discrete frequency option is not available for structural acoustics type analysis.

5.3.2 MATERIAL

The two available sub-options are:

1. DEFAULTS
2. DEFINE

5.3.2.1 DEFAULTS

If you select this option, the following lines are written to the GPBEST data file (.DAT):

```
**MATE
ID mat1
DENS 0.00001
EMOD 30000.0
POIS 0.3
```

In the case of ACOUSTICS or STRUCTURAL ACOUSTICS, the following lines are written instead:

```
**MATE
ID mat1
DENS 1.21
SPEE 342.0
```

The MATERIAL-DEFAULTS are useful when dealing with elastic isotropic materials. The values may be edited later. Select the PREP.MATE UP to exit out of the MATERIAL option. Do not use this option when there are multiple materials involved.

5.3.2.2 DEFINE

Based on the analysis type that you select in CASE options, the system will inquire about different values. The basic queries for any situation are:

> Give MATERIAL name:

A name must be given to identify the material. The name can consist of up to ten characters and must not contain blank spaces. It is important not to duplicate any name that has been declared earlier in the case of multiple materials.

> Identify the material as <I>sotropic or <A>nisotropic:

A single character input is expected.

```
Give the value of density:
```

Any real value may be given.

The second set of queries are based on the analysis type.

1. For ELASTIC analysis :

```
Give Youngs modulus value:
Give Poissons ratio value:
```

Give two values, one for each line above.

2. For HEAT TRANSFER analysis :

```
Give specific heat value:
```

Give a value.

3. For CONCURRENT THERMAL analysis :

```
Give Poissons ratio value:
Give specific heat value:
Give number of [T - E - Alpha] data sets (max. 20):
```

Give two real and one integer value, one on each line above. For each data set, you have to give $T - E - Alpha$ values (where $T =$ temperature, $E =$ Youngs modulus and $Alpha =$ coefficient of thermal expansion), the whole set defining the variation of material properties with temperature.

For each data set, the system will give you the following prompt:

```
n: give Temp., Youngs mod., Alpha value:
```

where $n =$ current data set number under the loop. You are expected to give three real values per line.

4. For ACOUSTIC and STRUCTURAL ACOUSTICS analyses:

Give the speed of sound:

Give a value.

For both ACOUSTICS and STRUCTURAL ACOUSTICS, the material being defined belongs only to the acoustic regions. For further clarification (if necessary), see the GPBEST manual. Also note that STRUCTURAL ACOUSTICS can currently deal with one acoustic GMR and one structural GMR, so only one material needs to be defined.

If the material is Isotropic and you are performing a HEAT TRANSFER or CONCURRENT THERMAL analysis, the following query is given:

Give Conductivity value:

Give a value.

If you have identified the material as Anisotropic, the system will ask you to give the constitutive material properties in line with the requirements given in the GPBEST manual.

To exit out of the MATERIAL option, select PREP.MATE UP. Please note that the values given for the queries of the above section are written almost immediately to the .DAT file. So, you are expected to know exactly what has been defined throughout this section. However, the values can always be modified by editing the .DAT file before submitting the job for GPBEST.

Up to 20 materials can be defined. The definition of each one starts by selecting the DEFINE option mentioned above.

5.3.3 GMR

The prerequisite to using this option correctly is that all the elements and nodes must be placed in proper GROUPS (using the GROUP command explained in Chapter 2). A GROUP in BESTVIEW is equivalent to a GMR in GPBEST. This option works only on GROUP information. If you have used the FAST MESH option (explained in Chapter 4), nodes and elements have been automatically been grouped and you can proceed with this option without any difficulty. On the other hand, if any mesh generation command other than the FAST MESH is used, nodes and elements would be residing in the database and they would have to be grouped using the GROUP command before using the GMR option. It is always safer to check the LIST→GROUP to check existence of groups and presence of nodes and elements in them. Also, please see the NOTE at the end of this subchapter.

When the GMR option is selected, the following queries are posed:

```
Give material name associated to GMR: GMR-name
```

*

Give the material ID you want.

*Note that this query does not come if only one material has been defined.

```
Give reference temperature for the GMR: GMR-name
```

Give a value.

Now, check existence of groups and presence of nodes and elements in each. If at this point there are no proper GROUPs, or nodes and elements are absent in GROUPs, do not panic. Use the GLOBAL COMMANDS options (each one is explained in Chapter 2) to note the elements desired under each group. Then use the GROUP option to define each group containing the elements that have been selected. Remember that this is all being done within the PREP environment. Now you can select GMR and use all the sub-options under GMR.

(1) Finite Element GMR:

If you are working with STRUCTURAL ACOUSTICS, then please read this segment. Since a GMR could with be a BEM (BOUNDARY ELEMENT METHOD) or a FE (FINITE ELEMENT) GMR, BESTVIEW shows:

```
For GMR # n named GMR-name:
Choose GMR type: <B> for BE , <F> for FE:
```

A single character input is required.

If you choose ‘‘B,’’ you may skip the following segment. Choosing ‘‘F’’ identifies the current GMR to be used as an FE GMR. BESTVIEW then asks:

```
Give the default thickness for all nodes:
```

A real value is expected

The above value is assigned to all nodes of this FE GMR, unless you wish to specify a different value for certain nodes. BESTVIEW then asks:

```
Define thickness at certain nodes?
    Yes        No
```

Select either ‘‘Yes’’ or ‘‘No’’.

If ‘‘Yes’’ is selected BESTVIEW then asks about digitizer and hidden view status and asks you to select appropriate nodes and:

```
Give the value of THICKNESS:
```

A real value is expected.

More thickness changes can be done through:

```
More thickness definition?
    Yes        No
```

Selecting ‘‘Yes’’ returns you to the node selection process.

Once the nodal thickness is defined, the next query is made regarding MASS:

```
Declare the MASS type: <C>onsistent or <L>umped:
```

A single character input is expected.

Next, the overall structural damping is necessary:

```
Give the overall structural damping (%):
```

A real value between 0.0 and 100.0 is expected.

BESTVIEW next asks about REFERENCE POINTS:

```
Are there any REFERENCE POINTS to be defined?
    Yes        No
```

Select either ‘‘Yes’’or ‘‘No’’.

You may need REFERENCE POINTS in an FE GMR to define orientation of frame elements within this GMR. If ‘‘Yes,’’ is selected, then BESTVIEW asks:

```
How many REFERENCE POINTS (no. <101)?
```

An integer value is expected.

For each reference point, BESTVIEW will ask:

```
Give the reference point coordinates (x, y, z):
```

Three values are expected.

Note that the reference vector is defined as the one going from the origin (0.0.0) to the reference point coordinates. Also, note that reference points are internally numbered from 50001 onward. The use of reference points to define orientation of the frame cross-section is described in Section 5.3 of the GPBEST manual.

The next task is to define material property for all elements to follow. BESTVIEW gives the following items to be defined:

1. Youngs modulus :default value = 0.2e+12
2. Poissons ratio :default value= 0.3

3. Density :default value = 0.78e+0.4
4. Gross c/s area :default value = 0
5. SXA: Shear area (x) :default value = 0
6. SYA: Shear area (y) :default value = 0
7. IXX: Moment of inertia (x) :default value = 0
8. IYY: Moment of inertia (y) :default value = 0
9. Torsional Inertia :default value = 0

Select any of the above options to give its value. Options 4 through 9 are used for frame elements and remain as dummy quantities in shell elements. The x and y shown above define the local plane on which the frame cross-section lies. Once the properties are defined, BESTVIEW requires the elements over which the above properties are valid:

```
Finite element property for:
<1> All shell elements,     <2>Selected shell elements
<3> All frame elements,     <4>Selected frame elements
```

An integer value is expected.

If ‘‘1’’ or ‘‘3’’ is selected the system will ask:

```
More elements for this property set?
    Yes        No
```

If ‘‘Yes’’ is selected, the system will return to the ‘‘Finite Element property for: . . .’’ menu.

If ‘‘2’’ or ‘‘4’’ was selected, BESTVIEW will then ask about digitizer and hidden view status and requires a selection of appropriate elements. (If for instance, you are in the frame selection mode, BESTVIEW would only pick frame elements and not permit shell type elements to be selected.)

If dealing with frame-type elements, BESTVIEW will ask about the reference point to be used for the selected element set, provided reference points have already been defined in this GMR (otherwise if does not write any reference number when writing the nodal connectivity data of frame elements). To change property values, BESTVIEW asks:

```
Do you want another property set?
    Yes        No
```

Select ‘‘Yes’’ or ‘‘No.’’

All elements defined between the previous property set and the current query are assumed to have the same property attribute values. If you select ‘‘Yes’’ to the above query, then BESTVIEW again asks you to define the new attribute values and takes you to the ‘‘Finite Element property for . . .’’ menu.

If you select ‘‘No’’ to the above query, BESTVIEW then takes you to the next GMR or out of the GMR menu. Note that BESTVIEW takes care of possible duplication while selecting (the duplicate elements are not highlighted) different property sets. BESTVIEW also checks to see that elements are not missed in the FE GMR while defining the property sets. However, refer to the GPBEST manual for the limit on number of property sets that can be declared in each FE GMR.

(2) Boundary Element GMR:

Several reference points may be defined within a BEM GMR, for later use in the **BODY set, as in the case where a source quantity is referred to such reference points. BESTVIEW may ask the following for each GMR:

```
Are there any reference points to be defined?
    <Y>es        <N>o:
```

A character input is required.

If the answer to the above query is ‘‘Y,’’ the system will ask:

```
How many REFERENCE POINTS (no. < 101)?        n
Give the reference point coordinates (x, y, z):      v1, v2, v3
⋮
Give the reference point coordinates (x, y, z):      v1, v2, v3
```

In the above, n is an integer quantity while ‘‘$v1$,’’ ‘‘$v2$’’and ‘‘$v3$’’ are real quantities.

BESTVIEW automatically assigns the reference point number starting from 50001 (so that there is no possibility of a node number clash with GMR nodes).

Selection of the GMR option eliminates manual normal card definition for analysis through GPBEST. The GMR option automatically re-orients element connectivity for a positive normal definition and displays the area and volume calculations for each GMR. The display of correct area and volume calculations for each GMR ensures that the re-orientation has been performed.

Please note that NEXT GMR must be selected before going to the next GMR or exiting out of PREP.GMR.

The following sub-options are optional for each GMR:

1. SAMPLING POINTS
2. HOLE ELEMENTS
3. SPECIAL ZONE

5.3.3.1 HOLE ELEMENT

This is not implemented in the current release.

5.3.3.2 SAMPLING POINTS

If you would like to record results over a number of points other than the nodes connected with the elements in the model, you must define sampling points. This is optional for each GMR. Once selected, the system will ask the following:

> How many sampling points do you want:

An integer value (≤ 200, for each GMR) is expected.

For each such point mentioned above,

> Give X, Y, Z coord. of sampling point: n:

where n is the sampling point number.

Three real values are expected.

Note that you may collect elements and declare a group with a name starting with ‘‘SAMP’’ or ‘‘SS’’. During the definition of a BEM GMR, such special groups would be picked up by BESTVIEW and treated as sampling points and surfaces.

5.3.3.3 SPECIAL ZONE

This is not implemented in the current release.

5.3.3.4 NEXT GMR

In case you wish to define SAMPLING SURFACES under a specific GMR while defining GROUPs in BESTVIEW, please don't forget to declare the group name of a ''Sampling Surface'' with a prefix ''SS.'' For example, consider the following scenario:

Group Name	Elements
GMR1	1, 2, 3, . . ., 100
GMR2	101, 102, . . ., 150
SS1	151, 152, 153
SS2	154, 155, . . ., 170
SS3	171, 172

The above group names have been declared in BESTVIEW before coming to the DATA PREPARATION MODULE.

Then, in the DATA PREPARATION stage, BESTVIEW automatically picks the name ''GMR1'' to be the first GMR. If there are SAMPLING POINTS that are not associated to any SAMPLING SURFACE in this GMR, select the SAMPLING POINT option (Section 5.3.3.2). Select NEXT GMR to go to the next GMR. Since there are special groups with the name prefix ''SS'', BESTVIEW will ask the following:

```
The following (sampling) GROUPs are available:
    SS1   SS2     SS3
Choose a name from above: <N> for none:
```

If ''SS1'' is chosen to be a sampling surface under GMR1, enter ''SS1''. The relevant elements in SS1 will be highlighted and you will be asked to confirm your selection.

The query is set back to:

```
The following (Sampling) GROUPs are available
    SS1     SS2     SS3
Choose a name from above: <N> for none
```

If ''SS2'' is also selected to be a sampling surface in GMR1, enter ''SS2''. The relevant elements defined in SS2 will be highlighted and you will be asked to confirm your selection.

The query is set back to:

```
The following (Sampling) GROUPs are available:
    SS1      SS2      SS3
Choose a name from above: <N> for none:
```

If you wish to proceed to the next GMR, type ‘‘n’’.

The above process repeats itself for GMR2. If you wish only ‘‘SS3’’ to be a sampling surface of that GMR, proceed accordingly.

When NEXT GMR is selected, since there are only two GMRs without the prefix ‘‘SS’’ and BESTVIEW has processed both of them, the system will go to the interface definition section (only valid for multiple GMRs).

Note that all the ‘‘sampling surfaces’’ are available for every GMR section. So the appropriate ‘‘sampling surface(s)’’ must be selected when processing each GMR.

Once the first GMR has been defined, select this option to process subsequent GMRs. When all GMRs are completed, the interfaces can be defined.

In case there are multiple GMRs, BESTVIEW will identify the common elements between a pair of GMRs and display the interface area on the screen. Subsequent queries will be based on the analysis type chosen in the CASE option (refer to Section 5.3.1).

a) ELASTIC analysis:

```
For the ELASTIC being performed:
<1>BONDED                    <2>SLIDING
<3>FIT (linear)              <4>SPRING
<5>CONTACT (non-linear)      <6>FIT+CONTACT
<6>SLIDING FIT               <8>SLIDING SPRING
```

An integer is expected.

For options 3, 6 and 7, the following is required:

```
Give the displacement offset of the interference fit (+ve or -ve
value):
```

A single value is expected.

For option 4, the following is asked:

> Give the NORMAL and TANGENTIAL values of spring coefficients:

Two values are expected.

For options 5 and 6, the following queries are asked:

> Give the coefficient of STATIC friction:
>
> Would you like to OFFSET the CONTACT surfaces from their physical position to form a GAP/OVERLAP (<Y>es, <N>o):

If you enter ‘‘Y’’ above,

> Give the offset in the NORMAL DIRECTION (+ve for GAP, -ve for OVERLAP):

For option 8, the system would ask you to:

> Give the NORMAL spring coefficient:

A single value is expected.

b) HEAT analysis:

> For the Heat analysis being performed:
>
> <1> BONDED <9> RESISTANCE <15> GENERALIZED CONVECTION
>
> Choose the type you want:

An integer is expected.

For option 9, the following query appears:

```
Give the thermal resistance coefficient:
```

A single value is expected.

For option 15, the input requirements are:

```
For GMR: name1
Give the 3 generalized convection coefficients:
```

Three (3) values are required.

```
For GMR: name2
Give the 3 generalized convection coefficients:
```

Three (3) values are required.

In the above, name1 and name2 are the two GMRs for which the interface information is being worked upon.

c) CONCURRENT THERMAL analysis:

```
For the CTHERM analysis being performed:
<1>BONDED                          <2>SLIDING
<3>FIT (linear)                    <4>SPRING
<5>CONTACT (non-linear)            <6>FIT+CONTACT
<7>SLIDING FIT                     <8>SLIDING SPRING
<9>RESISTANCE                      <10>SLIDING+RESISTANCE
<11>FIT+RESISTANCE                 <12>SPRING+RESISTANCE
<13>SLIDING FIT+RESISTANCE         <14>SLIDING SPRING+RESISTANCE
Choose the type you want:
```

An integer is expected.

For all the options above, the various queries are already listed down under the last two analysis types.

d) ACOUSTICS analysis:

```
For the ACOUSTICS analysis being performed:
<1> BONDED
<16> IMPEDANCE
Choose the type you want:
```

An integer is expected.

For option 16, the system would inquire about the following:

```
Give the IMPEDANCE coefficient:
```

A single value is expected.

If a GMR does not have an interface with other GMRs, the system will warn you:

```
WARNING! GMR # n does not have any interface with other
GMRs.
Do you want to continue (<Y>es, <N>o)?
```

Sometimes, if you are working with a FIT/CONTACT problem, there could be a physical gap between the interface elements of two adjacent GMRs. For such a situation, BESTVIEW will not identify any interface and would give the above warning. Respond with ‘‘Y’’ to continue building data and later edit the data file manually to declare the **INTERFACE section of the pair of GMRs having a physical gap at their interfaces.

NOTE: For Multiple Groups (or GMRs):

If you are manually defining nodes and elements under a GROUP, you should duplicate those nodes and elements belonging to the interface between adjacent GROUPs in the definition for each of them.

For example, for the following figure, the groups are defined manually.

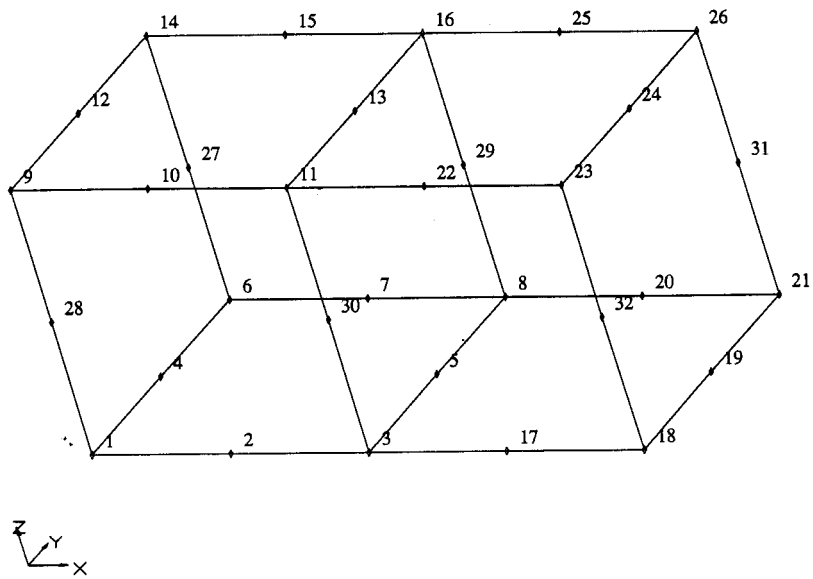

Fig. 5.3.3.5.1 Meshed Model Showing Node Numbers

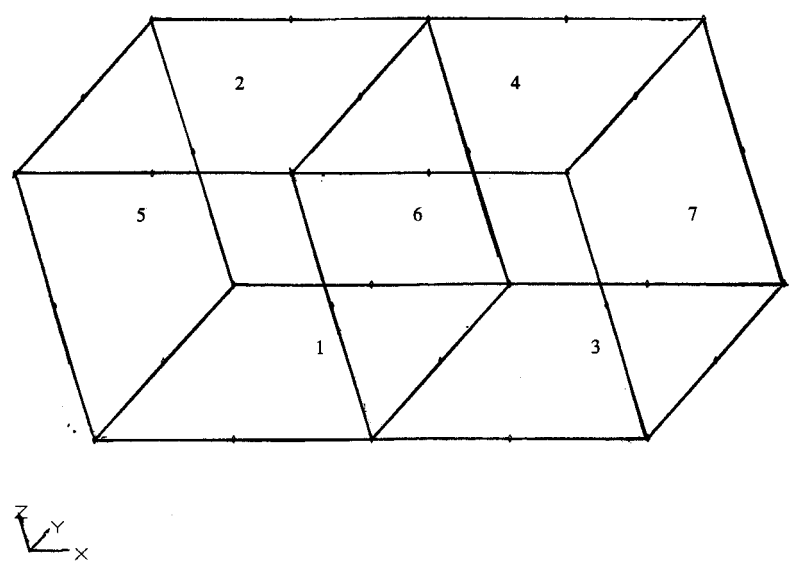

Fig. 5.3.3.5.2 Same Model with Element Numbers

Define the groups (refer to Chapter 2) as follows:

Name	Nodes	Elements
g01	1 to 16, 27 to 30	1,2,5,6
g02	17 to 26, 29 to 32, 3,5,8,11,13,16	3,4,6,7

Notice that nodes (3,5,8,11,13,16,29,30) and elements (6) are declared both in GROUPs g01 and g02.

After the GMR NORMAL option is defined (i.e., while preparing data for the above model) for the first group, g01, select NEXT GMR option. Define the NORMAL for the second group, g02 and select the NEXT GMR option. Since it is a multi-GMR problem and NORMALS (and other optional features) have been defined for each GMR, the system will give an element file for all elements belonging to interfaces between adjacent GMRs:

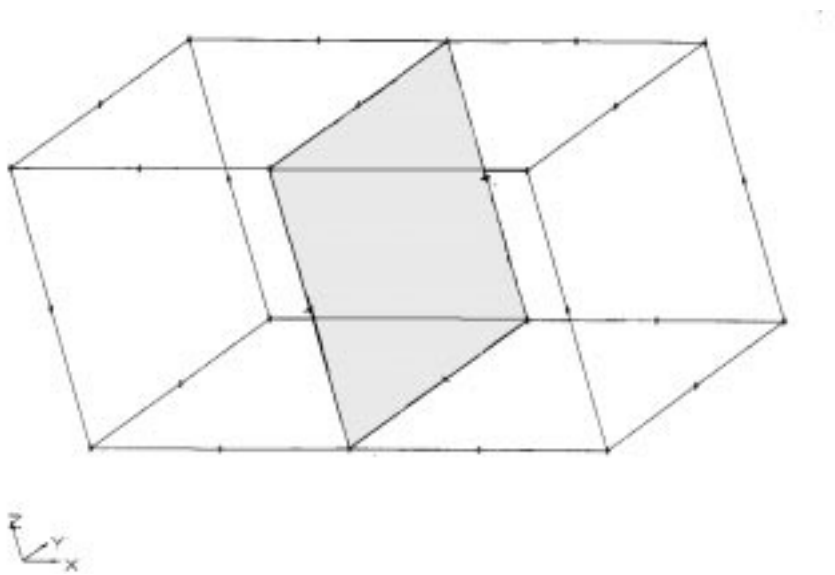

Fig. 5.3.3.5.3 Identification of Interface Between Adjacent GMRs

The list of options for interface types available for the type of analysis being performed is given and one must be selected.

The above process will be repeated for all interfaces in succession. For each such interface shown on the screen, the interface condition must be selected.

5.3.3.5 INTERFACES WITH A GAP CARD

When two GMRs are separated by a gap (uniform or non-uniform), the interface detection, is not automatic. You would be required to select a group of elements from each GMR and manually ‘‘assist’’ the interface definition. For such interfaces, data generated by BESTVIEW will always produce a GAP EXPLICIT definition (refer to Section 5.4.1 of the GPBEST User manual), which also includes a nodal pairing in the interface definition.

```
Do you want to use the GAP card to define a physical gap at the
interface?
    <Y>es        <N>o
```

Specify Y or N.

The first step in the definition of a GAP card requires you to select elements in each GMR (not necessarily matching up). In order to assist you in choosing the right view to select the elements in each GMR, you will be frequently asked:

```
<1>CDRAW <2>DRAW <3>PAN <4>ZOOM
<5>ROTATE <6>MAGNIFY <7>QUIT
```

Specify an integer (1-7) so that you have the correct view to select entities each time.

BESTVIEW will then display the following on the shell window.

```
SELECTING ELEMENTS FOR GMR: GMR-name1
```

If you have turned the digitizer ON, you could graphically select the elements (in any order) using the mouse. Or else, the element numbers could be input manually.

Once you have selected a group of elements in each GMR for the interface definition, BESTVIEW tries to match up these elements using the closest distance algorithm and displays the element pairing by connecting lines through the element centroids.

If you are not satisfied with the automatic pairing displayed, BESTVIEW gives you the option to manually change the element pairing by selecting one element at a time from each GMR.

```
<C>onfirm, <M>odify element pairing:
```

Specify ‘‘C’’ if you are satisfied with the pairing, or else specify ‘‘M.’’

```
Select ONLY 1 element on GMR: GMR1-name
```

Select one element on the first GMR.

```
Select ONLY 1 element on GMR: GMR2-name
```

Select one element on the second GMR which should match up with the first one.

BESTVIEW instantly displays the pair by a line connecting the two elements at their centroids.

Once you have manually changed the element pairing, BESTVIEW tries to match up the nodes automatically and displays the nodal pairing by lines connecting the nodes.

In cases where the mesh discretization of the two GMRs are quite different from one another, the automatic node pairing algorithm may fail. Hence, BESTVIEW gives you the option to manually change the nodal pairing.

```
Do you want to change this nodal pairing?
    <Y>es        <N>o
```

There are two approaches to node pairing, <S>emi-automatic and <M>anual.

In the <S>emi-automatic approach, select a group of nodes in each GMR and BESTVIEW will try to match up these nodes internally.

In the <M>anual approach, select one node from each GMR to define a node pair.

```
<S>emi-automatic    or    <M>anual modes?
```

Specify ‘‘S’’ or ‘‘M.’’

The semi-automatic approach could be used on those portions of the interface where the discretization is similar, so that the closest distance algorithm can pair up the nodes.

The manual approach is recommended as a last resort, when a few nodes cannot be paired up using the automatic or the semi-automatic approaches.

BESTVIEW also checks a variety of possible errors in the node selection process. The nodes selected must belong to the relevant GMR and must belong to an element or elements selected previously to define the interface. Also, in the manual node pairing mode, no more than one node can be selected from each GMR at one time.

```
Do you wish to continue node pairing?
    <Y>es        <N>o
```

If you are completely done with the node matching, you may quit the node pairing session at this point.

Fig 5.3.3.5.4 shows a two-dimensional Hertz contact problem to be analyzed using the GAP EXPLICIT card.

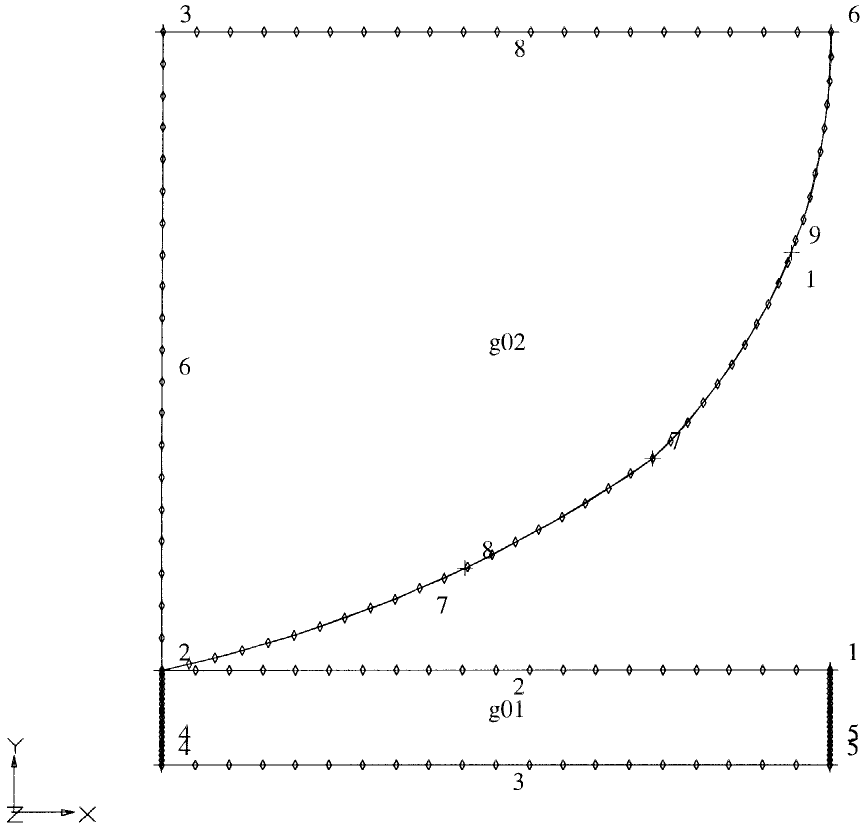

Fig. 5.3.3.5.4 Hertz Contact Problem - Using GAP EXPLICIT Option

Fig. 5.3.3.5.5 shows the automatic nodal pairing generated by BESTVIEW when you select 3 elements on each GMR for the interface definition.

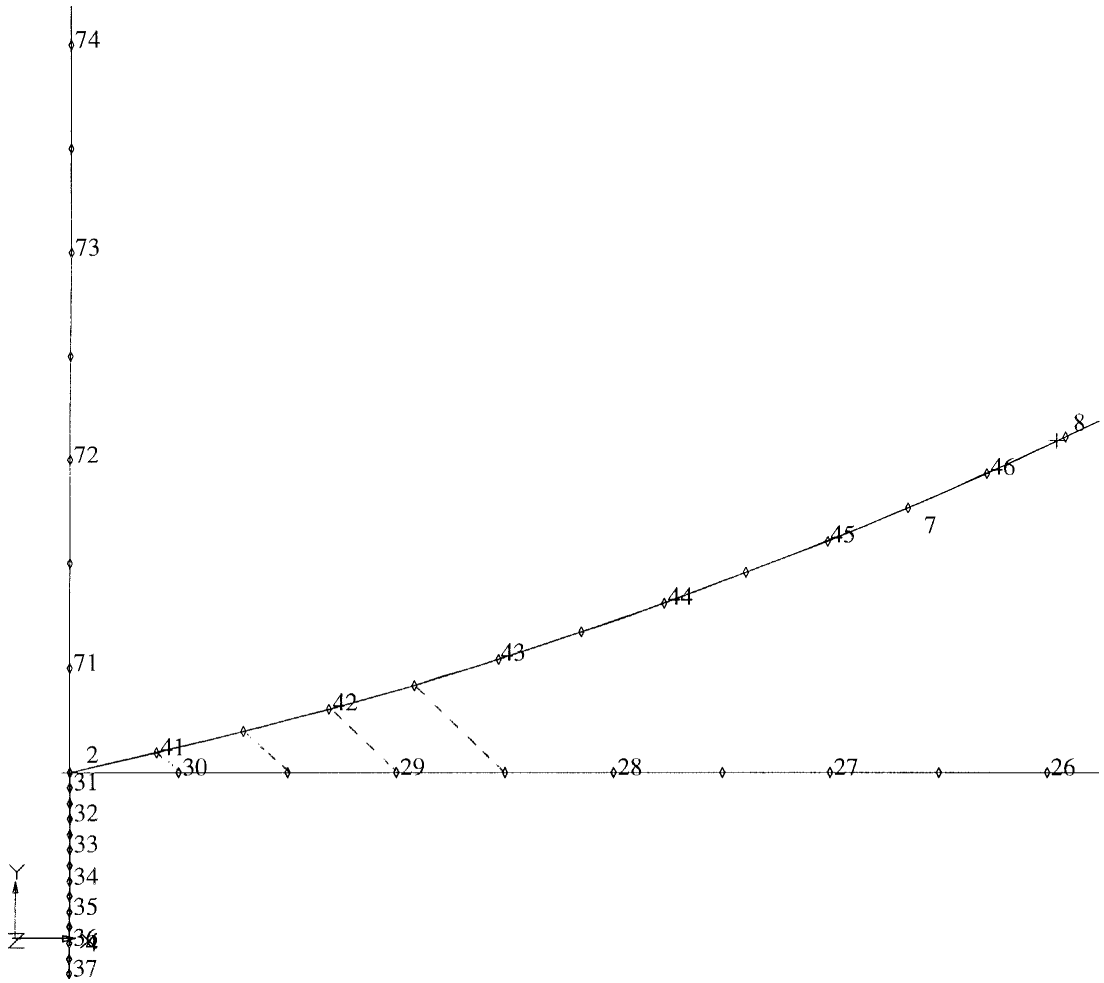

Fig. 5.3.3.5.5 Hertz Contact Problem - Node Pairing

5.3.4 BCSET

This section deals with the definition of constraint conditions and external load distribution patterns over the model. The following boundary condition sets are available to the user:

Entity	Direction
Spring	Global X
Spring	Global Y
Spring	Global Z
Convection	--
Flux	Normal
Temperature	--
Displacement	Normal
Traction	Normal
Displacement	Global X
Displacement	Global Y
Displacement	Global Z
Traction	Global X
Traction	Global Y
Traction	Global Z
Non-zero displacement	Global X
Non-zero displacement	Global Y
Non-zero displacement	Global Z

Each of the above entities are iconized (see Chapter 2, SHOW.BC) so that, once you define any one of them, they are shown on the model immediately for checking purposes.

However, note that the icons are of standard length and do not represent magnitudes of any kind. Also, the direction of the icon follows the global axes or the normal as defined by the element connectivity. The basic purpose of displaying the icons is to verify application of the boundary condition to the proper element.

For more clarification on the direction in which a boundary condition acts, along with the implications of the NORMAL definition over a GMR, you are advised to go through the respective sections of the GPBEST manual.

The BCSET option is the most interactive module in this chapter and can be done in multiple sessions by appending the information every time. Remember that for each type of boundary condition, you must invoke the BCSET option again.

Each time you select BCSET, the system will respond:

```
Starting definition of BCSET # n
Abort to set DIGITIZER ON

Give the NAME of boundary condition set
[A] to abort:
```

A character input (≤ 20 characters) is expected.

You may wish to abort the process of BCSET due to of the following possibilities:

1. You are not ready to define the proper BCSET.

2. When asked to identify elements over which the BCSET would be applied, you wish to select the elements on the screen with a mouse rather than typing the numbers in; however, you forgot to put DIGITIZER ON before selecting BCSET.

If you have a multiple GMR model, the system will give a list of all GMR names and ask:

```
Choose GMR name from above:
```

A maximum of 20 characters defining any one of the listed names is expected.

For a single GMR model, the above query is not asked.

Depending on the type of analysis being performed, BESTVIEW will ask either of the following:

a)

```
Choose boundary condition type from:
<L>ocal value, <G>lobal value or <R>elation
between variables:
```

b)

```
Choose boundary condition type from:
<V>alue, <R>elation between variables:
```

In either case, a single character input is expected.

Typically, option (b) would be used while preparing data for ACOUSTICS or STRUCTURAL ACOUSTICS. A further variation of option (b) if an INDIRECT BEM is used for the acoustic domain, is as follows:

```
Choose boundary condition type from:
<v>alue, <D>rop in pressure or <R>elation
between variables:
```

If you choose ‘‘D,’’ then instead of asking you to select elements, BESTVIEW would then ask you to select nodes.

After confirming the selection, the system asks for the drop value (real and imaginary value) and exits the BCSET-input.

c) For a finite element GMR being chosen in case of Structural Acoustics, the following sub-options are available:

1. PR: ELEM. PRESSURE
2. CL: LOCAL CONSTRN.
3. CG: GLOB. CONSTRN.
4. FL: LOCAL FORCE
5. FG: GLOB. FORCE

You may select any one of the above.

1. If you select option 1 to define element pressure, BESTVIEW will ask:

```
Give the pressure values (REAL and IMAGINARY):
```

Two real values are expected.

```
Pressure (always LOCAL) to be applied on
    <S>elected elem. or <N>one:
```

A single character input is expected.

If you select ‘‘N,’’ then the process is aborted. For ‘‘S,’’ the system will ask you about the mode of selection. After the selection is over, it would require confirmation.

2. If you select option 2 to define local constraints, BESTVIEW will ask about the mode of node selection and confirm the selection. Then it will ask:

```
Do you want to align the local Axis?
    YES        NO
```

Select either ‘‘Yes’’ or ‘‘No.’’

The local axes are displayed over the selected nodes. If you wish to change the local axes at certain nodes, select ‘‘YES.’’ In that case, BESTVIEW will give you the following options:

```
<0> Abort
<1> Align x-local to user specified direction
<2> Align y-local to user specified direction
<3> Align both x-local and y-local to user specified
    directions
<4> Align x-local with user specified
  Choose the type you want.
```

An Integer value is expected.

The necessary alignment of the local x or y or both is done by the vector(s) defined as those going from the origin to the coordinates declared. The local z is the resultant normal at the node.

At this point, BESTVIEW offers the following sub-options:

1. TX: TRANSLATION X
2. TY: TRANSLATION Y
3. TZ: TRANSLATION Z
4. RX: ROTATION X
5. RY: ROTATION Y
6. RZ: ROTATION Z
7. DONE

You may select one or multiple sub-options based on the constraint you wish to impose. For every selection, BESTVIEW will ask you to:

```
Give the REAL and IMAG. value:   v1, v2
```

Two real values are expected.

After declaring relevant constraints for the selected node set, select ‘‘DONE’’ to come out to the data-preparation menu.

3. If you select option 3 to define global constraints, BESTVIEW will ask about the mode of node selection and confirm the selection. Then the following sub-options will be displayed:

   1. TX: TRANSLATION X
   2. TY: TRANSLATION Y
   3. TZ: TRANSLATION Z
   4. RX: ROTATION X
   5. RY: ROTATION Y
   6. RZ: ROTATION Z
   7. DONE

   You may select one or more sub-options based on the constraints you wish to impose. For every selection, BESTVIEW will ask you to:

Give the REAL and IMAG. value: $v1$, $v2$

   Two real values are expected.

   After declaring relevant constraints for the selected node set, select ‘‘DONE’’ to exit the data-preparation menu.

4. If you select option 4 to define local force, the steps are identical to those of option 2, except that the sub-options are as follows:

   1. FX: FORCE X
   2. FY: FORCE Y
   3. FZ: FORCE Z
   4. MX: MOMENT X
   5. MY: MOMENT Y
   6. MZ: MOMENT Z
   7. DONE

   When you select any sub-option, BESTVIEW will ask you to give the real and imaginary values. After declaring relevant forces for the selected node set, select ‘‘DONE’’ to come out to the data preparation menu.

5. If you select option 5 to define global force, the steps are identical to those of option 3, except that the sub-options are as follows:

   1. FX: FORCE X
   2. FY: FORCE Y
   3. FZ: FORCE Z

4. MX: MOMENT X
5. MY: MOMENT Y
6. MZ: MOMENT Z
7. DONE

When you select any sub-option, BESTVIEW will ask you to give the real and imaginary values. After declaring relevant forces for the selected node set, select ‘‘DONE’’ to exit to the data-preparation menu.

At this point, the system gives a list of all the elements present in the GMR that are currently in use and prompts:

```
Boundary condition to be applied on
<A>ll elem. (all nodes) or <S>elected elem:
```

A single character input is expected.

Usually, the choice is S. In that case, if the DIGITIZER is OFF, the following prompt is given:

```
Range may be given by <-> between the lower and higher
numbers.  Multiple ranges may be given in a line along with
individual values separated by <,>.

To END input, give a <.> at the beginning of a request.

Give element numbers:
```

The following are examples of value element number definitions:

(a) Individual numbers:

```
Give element numbers:
Give element numbers:
Give element numbers:
```

```
1,2,5,7,8,25
17
.
```

(b) Range type input:

Give element numbers:	1,21-35,71,72
Give element numbers:	75-81,17-19
Give element numbers:	5
Give element numbers:	.

After the selection, the system will highlight the valid elements (all those elements given through the above queries which do not belong to the GMR being worked on would be automatically discarded) and ask:

```
Select: <C>onfirm, <R>edo,/update, <V>iew-change, <A>bort:
```

A single character is expected.

Let us study what happens for each option you select, except ‘‘C.’’ We will continue further discussion with the ‘‘C’’ option a bit later.

If you select ‘‘A,’’ you are aborting the BCSET process. Nothing is recorded in the .DAT (GPBEST data) file. You may have selected a wrong GMR to start with, and without realizing it, are trying to select elements for boundary condition specification. Every time the system will tell you that the elements you selected are not in the GMR you wanted. By now you may have identified that the GMR name was wrong to start with. In such situations you will select the abort option to exit.

If you select ‘‘V,’’ for a change in view, you have the option to CDRAW, PAN, ROTATE or ZOOM the model with either HIDDEN ON or OFF. Since this option is available to you in the selection process loop, the system will redisplay the model in the new view along with all the selected elements highlights on top. This option is very helpful in:

1) Locating elements difficult to identify in the current view
2) Be absolutely certain that the elements selected are indeed the required ones.

If you select ‘‘R,’’ you would be able to redefine the list of elements selected. In view of the current discussion, where the DIGITIZER is OFF, the most recent list of elements defined is the one which is active and would be highlighted. For example, if you declared a list of 100 elements, and after looking at the highlighted elements (maybe changed the view to make sure), you find that six (6) elements should not belong to this list. Then choose this option, and when asked to enter the element numbers, enter the list of 94 elements. However, if you want to do this process of selection and deselection by picking elements, keep the DIGITIZER ON. We will discuss this next.

If the DIGITIZER is ON (remember that you have an option to come out of BCSET command at the onset to SET the digitizer ON), then instead of asking you to give element numbers, the system will first ask you whether you will like to have HIDDEN ON or OFF, and then shows you element icons at the center of every element on display. It then asks:

```
Select ONE of the following: <S>elect/Add, <D>eselect/delete,
<F>inish
```

A single character input is expected.

Use the target cursor to define a box around all the elements you would like to select or deselect (actually, the icons at the center are all that matter). The screen is updated with the latest information containing highlighted elements still in the buffer. Continue boxing, and when done, keep the cursor in the display window and press ‘‘e.’’ You may keep on selecting, press ‘‘e’’ to exit, select ‘‘D’’ for deselection, keep on deselecting, press ‘‘e’’ to exit, and when satisfied, select ‘‘F,’’ when you would be asked to:

```
Select: <C>onfirm, <R>edo/update, <V>iew-change, <A>bort:
```

All options have been discussed, except ‘‘C.’’

If you enter C, the system proceeds further and asks:

```
Apply to <A>ll nodes / <S>pecific ones:
```

A single character input is expected.

Should you enter A, the subsequent BCSET will be applied to all the nodes of the selected elements. If you enter S, a list of all nodes belonging to the declared list of elements will appear on the screen. The system next prompts:

```
Give total number of nodes:
Give node numbers:
```

An integer value is expected in the first query. For the second query, give the nodes in a single line so that the total number equals the value given for the first query.

The system now says:

```
TIME variation in b.c. values (Y/N)?
```

A single character input is expected.

For a time-dependent boundary condition, the system will inquire:

```
Give NUMBER of time steps:
Give TIME values in ascending order:
```

An integer value is expected for the NUMBER of time steps. The second prompt expects a real input value for each time step.

If you are performing a HEAT TRANSFER or CONCURRENT THERMAL analysis and you chose a *relation between variables*, then:

```
Give CONVECTIVE FILM COEFFICIENT:
Give n AMBIENT TEMP. of convective fluid:
```

A single value for the first query is expected. n values are expected for the second query, where n is the number of time steps.

For time-independent problems of HEAT TRANSFER or CONCURRENT THERMAL analysis with a *relation between variables* prescribed, give two real values, one on each line of the following:

```
Give CONVECTIVE FILM COEFFICIENT:
Give AMBIENT TEMP. of convective fluid:
```

The following segment is based on time independent problem definition. If you opt for time dependency, the change in the input will be mentioned.

In case of ELASTIC analysis,

```
Identify variable type:
    <T>raction,
    <D>isplacement:
```

A single character input is expected.

If you choose *Global* definition, then,

```
Give direction:
    <1> x or R, <2> y or z, <3> z or θ:
```

An integer input is expected. This query does not come for a *Local* definition.

```
Give magnitude of variable:
```

for time-independent problems.

For time-dependent problems, for each of the number of TIME STEPS,

```
Give data for set # i:
```

$i \Rightarrow$ time step number.

A single value is to be given if *all nodes* are selected previously. If you chose *selected nodes* and gave the list of nodes previously, then give the magnitudes of the variable, one corresponding to each node of the selected-nodes-list, in a single line.

The system will then display the proper icon representing the boundary condition being described and ask you for confirmation:

```
Select: <C>onfirm, <R>edo, <E>dit, <A>bort:
```

A single character input is expected. The implications are the same as before, except that if you enter E, you will be interacting from the point of identifying the variable type onward.

When you confirm, the next query is:

Do you have any other boundary condition over the current elements and nodes (Y/N)?

A single character input is expected.

For HEAT TRANSFER analysis, the choice of variable type is: <F>lux and t<E>mperature; whereas for a CONCURRENT THERMAL analysis, the choice is more varied: <T>raction, <D>isplacement, <F>lux and t<E>mperature.

For ACOUSTICS or STRUCTURAL ACOUSTICS using DIRECT BEM, when you choose the ‘‘Value’’ type boundary condition, the available variable types are: <V>elocity and <P>ressure. For ‘‘Relation’’ type boundary condition, the available variable types are: <I>mpedance and <A>dmittance. Once you select the variable type, instead of giving magnitude of variable, BESTVIEW will ask you to:

Give the REAL and IMAGINARY value: $v1$, $v2$

Two Real values are expected.

The following is an example of a model (octant of a sphere) where LOCAL TRACTIONS were defined in the inner side and zero-displacements were prescribed in the three global directions. You can view individual boundary condition types or all of them together (refer to SHOW BC command in Chapter 2), and make plots at any time.

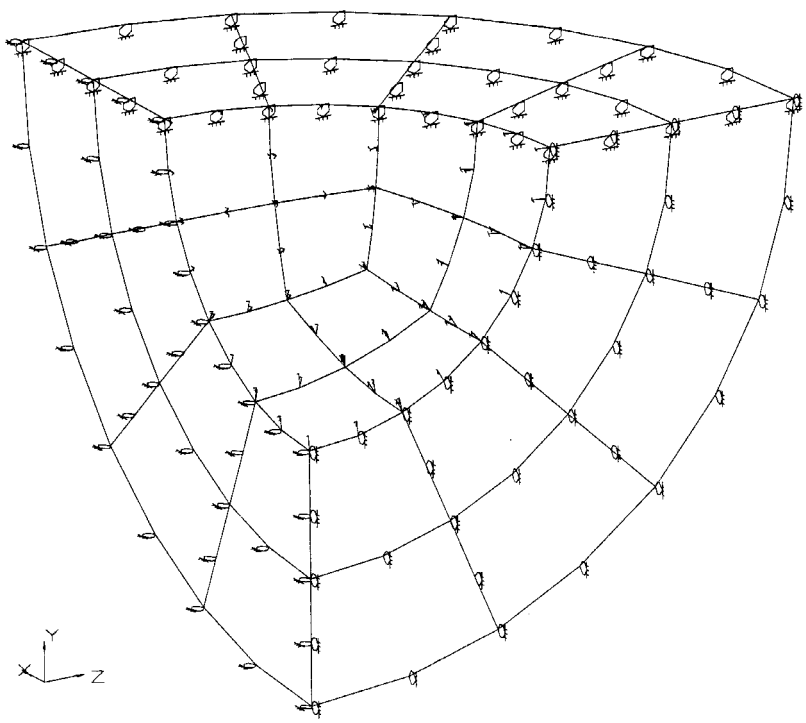

Fig. 5.3.4.1 Hidden View with Boundary Condition Icons

If you look closely, you will see two normal vectors representing tractions at a node shared by two or more elements. This happens due to the presence of *kinks* originating from the difference in curvature between adjacent elements.

5.3.5 BODY FORCE

If you wish to specify inertial and centrifugal forces, select this option. Two sub-options are available:

1. CENTRIFUGAL
2. INERTIAL
3. SOURCE
4. THERMAL

5.3.5.1 CENTRIFUGAL

If you have a 2D model and select either Plane Stress, Plane Strain or Axisymmetric option for the CASE DIMENSION option, then the system will ask:

Define point (x, y) about which the 2D body rotates:

Two real values are expected.

For a 3D analysis, the equivalent prompt is:

> Define two points for the axis of rotation:
> Give X, Y, Z of the FROM point:
> Give X, Y, Z of the TO point:

Three real values on each line of the above two prompts are expected. These points identify the axis about which the model rotates. The direction defines the positive rotation vector.

The system now inquires about time dependence:

> Is there a time variation (Y/N)?

A single character input is expected.

Should your reply be N, you are asked to:

> Give SPEED (in rpm) value:

A real number is expected.

If you need a time variation, your reply should be Y, for which you are asked to:

> Give no. of time variations (max. 20):

An integer value is expected.

For each of the above time steps, you are requested to:

> Give TIME and SPEED values for set # i:

Two values are defined for the ith time step.

5.3.5.2 INERTIA

The direction of the inertial force is defined through the following:

Give X, Y, Z value defining direction of inertial force:

Three real values are expected. In case of 2D, the system would ask you for only the X, Y value. The positive direction is then defined as the vector from the origin of the model to this point.

Time dependency is the next query:

Is there a time variation (Y/N)?

For time-independent problem,

Give ACCELERATION value:

For time-dependent analysis,

Give No. of time variations (max. 20):

An integer value is expected.

For each time step, the following values have to be given:

Give TIME and ACCN. value for set # i:

Two real values are expected for the ith time step.

5.3.5.3 SOURCE

A source may be defined by selecting this option. BESTVIEW will list all the available GMRs along with an easy-to-reference ID for each and ask:

> Choose GMR_id where the source should apply
> <integer #>: n

An integer input is expected.

Once you select the relevant GMR-id, BESTVIEW will give a list of all the reference points present in the corresponding GMR and will ask:

> How many reference points do you need? n

An integer input is expected.

For each reference point, BESTVIEW will ask:

> Ref. point # i : point id is : j

"i" is an integer displayed by BESTVIEW

"j" is an integer the user must supply, from the list of points BESTVIEW has given.

Finally, the system requires the following:

> Give the REAL and IMAGINARY values of the source
> <2 values> : $v1$, $v2$

Two real values are expected.

5.3.5.4 THERMAL

For problems in elasticity, a thermal body force may be defined using this option. BESTVIEW will list all the available GMRs along with our easy-to-reference ID for each and ask:

> Choose GMR-id <integer #>: n

An integer input is expected.

Then the type of thermal load distribution is asked:

> Select temperature variation: <C>ontinuous, <F>it :

A single character input is assumed.

For a ‘‘continuous’’ thermal variation, the constant temperature is asked:

> Give the constant temperature.

A real value is expected.

Higher order temperature variation terms are not asked for by BESTVIEW and you have to put those manually in the the data file, after consulting the GPBEST manual.

If you select the ‘‘fit’’ option, the system would ask:

> Following input requires prior identification of nodes where the temperatures are to be described. If you do not have such a list, please abort now.
> Select: <A>bort, <C>ontinue

A single character is assumed.

If you reply with ‘‘C’’, then you would have to give a list of nodes and temperatures at those nodes:

```
Give 0 0 to terminate the following query.
Give the node number and temperature (2 inputs):
```

One (1) integer and one (1) real value is required.

5.4 LIMITATIONS

The data preparation mode through BESTVIEW has the current upper-bound values:

1. 20 GMRs (or GROUPS)
2. 8000 nodes/GMR
3. 2500 elements/GMR
4. 2000 sampling points/GMR
5. 20 time variation steps

6.0 POST PROCESSING GPBEST RESULTS

6.1 INTRODUCTION

This chapter describes the post-processing of results through BESTVIEW. In order to analyze a model through GPBEST, you must have a data file. A data file may be generated through any one of the following:

1. BESTVIEW (refer Chapter 5)
2. PATBEST - From PATRAN to GPBEST
3. IDEASBEST - From I-DEAS to GPBEST
4. Hand editing the file

You will get the results in the form of a binary NEUTRAL file.

BESTVIEW takes information from this NEUTRAL file and places all the nodal results in the database. It also keeps a record of the mesh information (i.e., nodes and elements) in the database. Consequently you would be able to view fringe plots, contour plots, deformed geometry and XY-plots of the results obtained for the model. Of course, you have all the viewing capabilities (ZOOM, PAN, Z-CLIP, etc.), display capabilities (turning entities on/off, hidden on/off, labels on/off, etc.) and hardcopy options available at all times. You can also get fringe (or contour) plots on both the deformed and the undeformed configurations of the model.

6.2 LIST OF OPTIONS

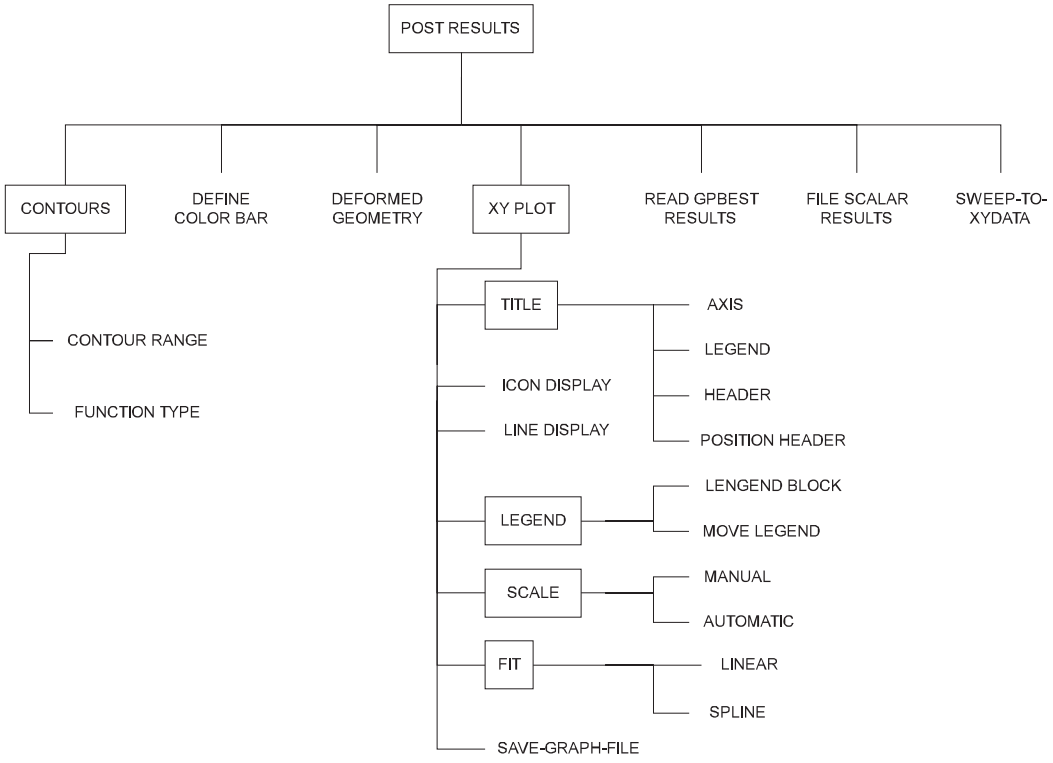

6.3 READ GPBEST RESULTS

All post-processing begins by selecting this option first. You will be asked:

> Enter GPBEST Neutral file name
> [*A*] to abort:

A character input (up to 80 characters) is expected.

You should not include blanks in the above input. You may enter the name using an absolute path, identifying the location of the file.

You should note that, just after a successful GPBEST run, you will get a NEUTRAL file named *NEUTRAL.OUT*. Generally, you should always rename that file to a suitable name and enter that name for the above query.

You may abort the process of reading GPBEST results by entering *A*.

Every time you select this option, the current database is purged and the new information is written in it. This feature helps you in the following manner:

1. No matter which file you were working with, selection of this option always starts a fresh database.

2. Results may be viewed GMR by GMR, or all GMRs together, by repeatedly using this option. You do not have to exit from the BESTVIEW environment.

You may also use the GROUP-RESULT ON GROUP option to view the results, GMR by GMR, once the neutral file is read in at least once through the current option. In both options, you will be asked for the GMR-id to be downloaded; except that in the current option, you must enter the neutral file name repeatedly.

If your model has multiple GMRs, the system will display a list of all GMRs associated with a GMR-id, and will ask you to enter the required GMR-id to be viewed. For example, if there are four GMRs, the system might show:

GMR-id	GMR-name
1	bottom-compo
2	compo-1
3	compo-2
4	top-compo

and then ask:

```
Give GMR name you wish to see <ALL (for all GMRs)>
```

Give the GMR name you wish to see, or ALL if you want results on all GMRs.

If you are dealing with a FORCED VIBRATION analysis, the system will ask:

```
Give the type of result required ...
Select <R>eal, <I>maginary or <M>agnitude:
```

A single character input is expected.

If you are dealing with an ACOUSTIC analysis problem, the system will ask:

```
The following results are available:
<1> (Real) Pressure
<2> (Imaginary) Pressure
<3> (Magnitude) Pressure
<4> (Real) Velocity
<5> (Imaginary) Velocity
<6> (Magnitude) Velocity
<7> Normal Intensity
<8> Power Density
Choose the correct type:
```

An integer is expected.

If you select the ‘‘Magnitude’’ option, the system will ask:

```
Do you want a dB_Lin output: [<Y>es, <N>o]:
```

A single character input is expected.

If you say ‘‘yes’’ above, then the reference value is requested:

Give the ref. value (gen. 2.1e-05 N/m**2 for pressure):

A real value is expected.

If you have results over multiple time steps, the system will report:

The number of time steps in the Neutral file is: n
Enter the time step for which results are to be read
in (default = 1):

An integer is expected.

When information from a Neutral file is read in, BESTVIEW renumbers the external mesh numbers (the user defined node and element numbers) to a sequential scheme. However, you can view the external numbers by using the DISPLAY-OPTION-LABEL IMPORTED MESH NUMBER option and selecting YES. Note that except for labeling and highlighting, all other values are based on the system generated sequential numbers.

6.4 CONTOURS

You should select this option to modify any one of the following sub-options:

1. CONTOUR RANGE
2. FUNCTION TYPE

If you have not yet read the GPBEST results through the READ GPBEST RES. option, the system will not allow you to enter the CONTOURS option. It will give the following message:

```
Select READ GPBEST RESULTS first to read results from
the NEUTRAL file
```

In that situation, you should select the READ GPBEST RES. option.

6.4.1 CONTOUR RANGE

For the function under consideration (default function is the Von Mises stress), the default contour range selection is AUTOMATIC with 8 contour levels. If you want to increase or decrease the number of contour levels, or, should you need to verify contours within a known range of variations, reply to the following prompts:

```
Enter the mode
```

The choice is AUTOMATIC or MANUAL. For selecting MANUAL, first press ESC key to clear the window and type MAN. For the MANUAL mode, you have to enter the range over which you need the results. The following is asked:

```
Enter function range (lower, upper limit)
```

Two values are expected.

If your lower or upper value falls beyond the limits (i.e., the minimum and maximum) obtained for the function type over the model, the corresponding minimum or maximum is taken by the system automatically. You should note that although you specify a range within the minimum and maximum, the contour levels are computed based on your range. However, on the display, the minimum and maximum for the function under consideration would always be displayed as the lowermost and uppermost values between the contour levels.

The system now asks you to:

Enter number of contour levels:

Enter an integer value (≤ 12).

6.4.2 FUNCTION TYPE

The following function types are available: STRAIN, STRESS, SCALAR, DISPLACEMENT. For the STRAIN and STRESS function type, the following sub-options are available: XX, YY, ZZ, XY, XZ, YZ, MAX, MIN, VON MISES. For the displacement function type, the following sub-options are available: X, Y, Z. For all types of scalar variables (depending on the type of analysis), you should choose SCALAR for the display of the function.

The system will ask:

Enter function to plot:

The default is STRESS. To select any other function type, press the ESC key to clear the prompt window and enter any other valid function type.

If the chosen function is anything other than SCALAR,

Choose any sub-option valid for this function type The sub-options are displayed on the command window.

6.4.3 AN EXAMPLE

Display of the variation of a specific function type may be either in terms of line contours or fringe plots (see MODE options in Chapter 2). For the following figures, we have selected MODE and then the LINE CONTOUR option as our display mode

1.

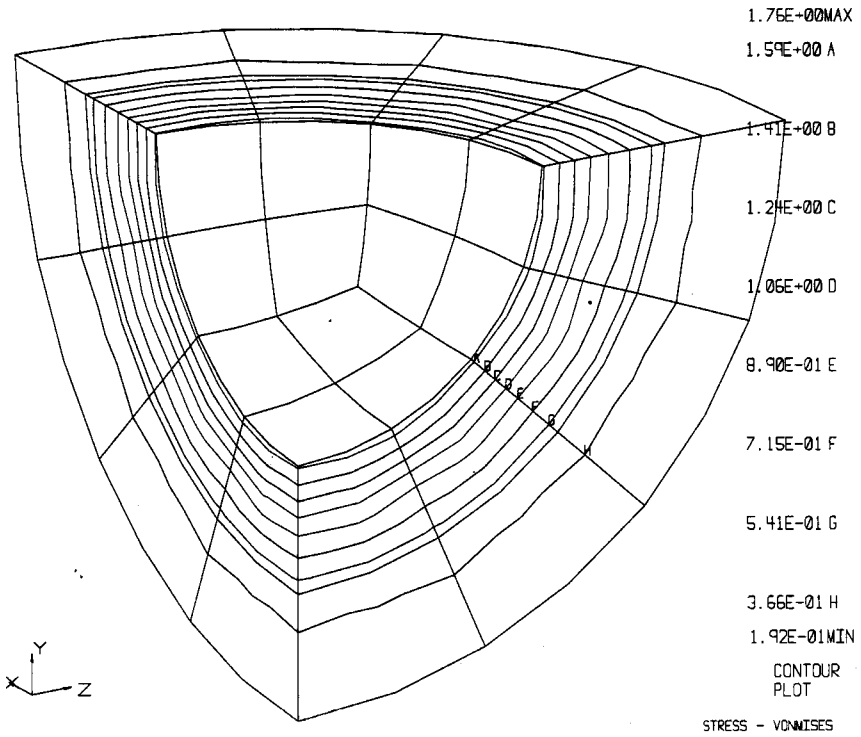

Fig. 6.4.3.1

Contours - Contour Range option :

Enter the mode: Enter number of contour levels:	AUTO 8

2.

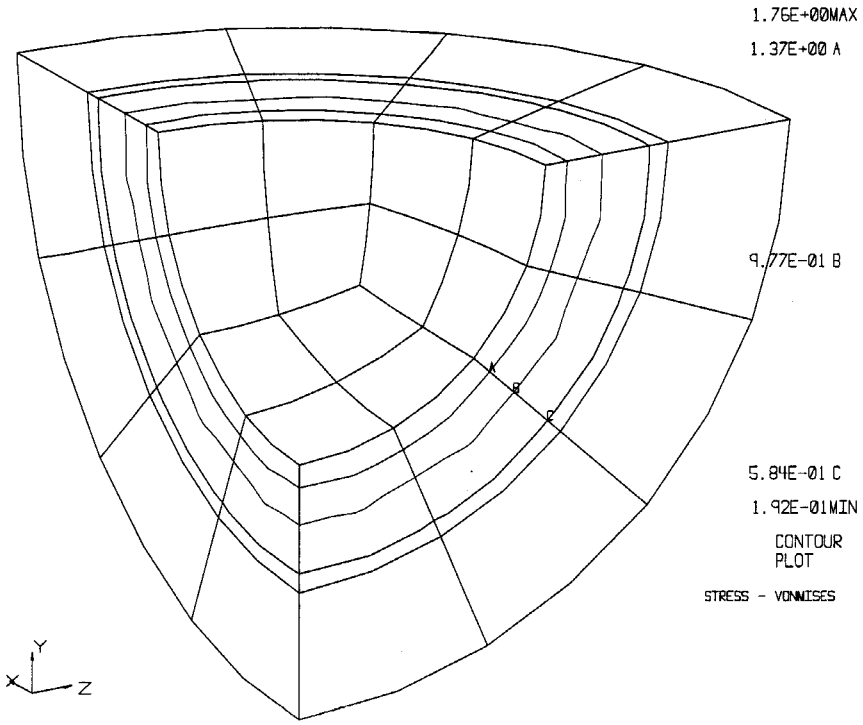

Fig. 6.4.3.2

Contours - Contour Range option :

Enter the mode: Enter number of contour levels:	AUTO 3

3.

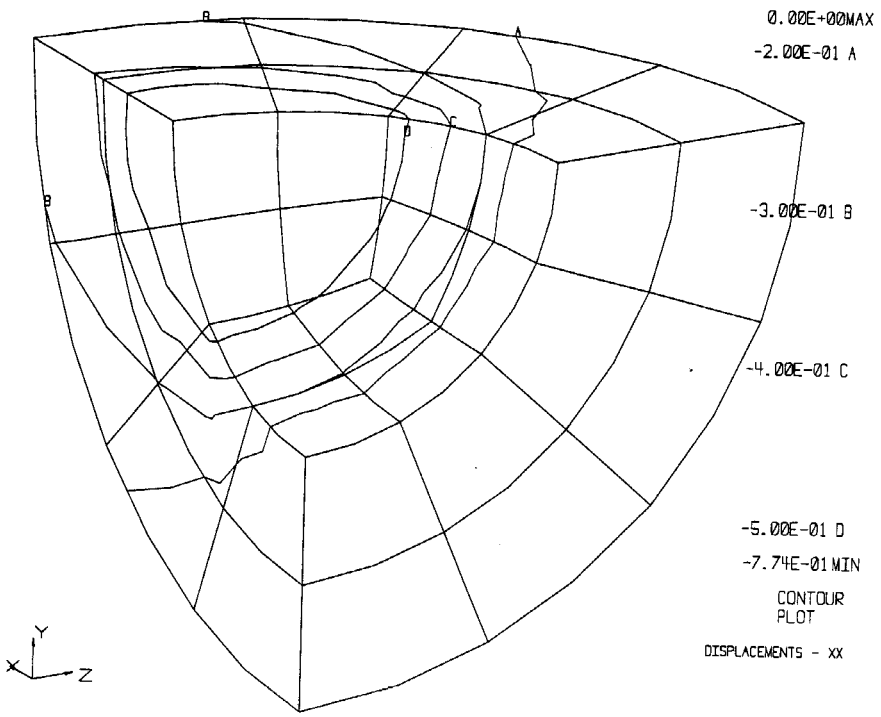

Fig. 6.4.3.3

Contours - Function Type option :

Enter function to plot: Enter desired component of function:	DISP X

Contours - Contour Range options :

Enter the mode: Enter function range (lower, upper limit): Enter number of contour levels:	MAN -0.5, -0.2 4

4.

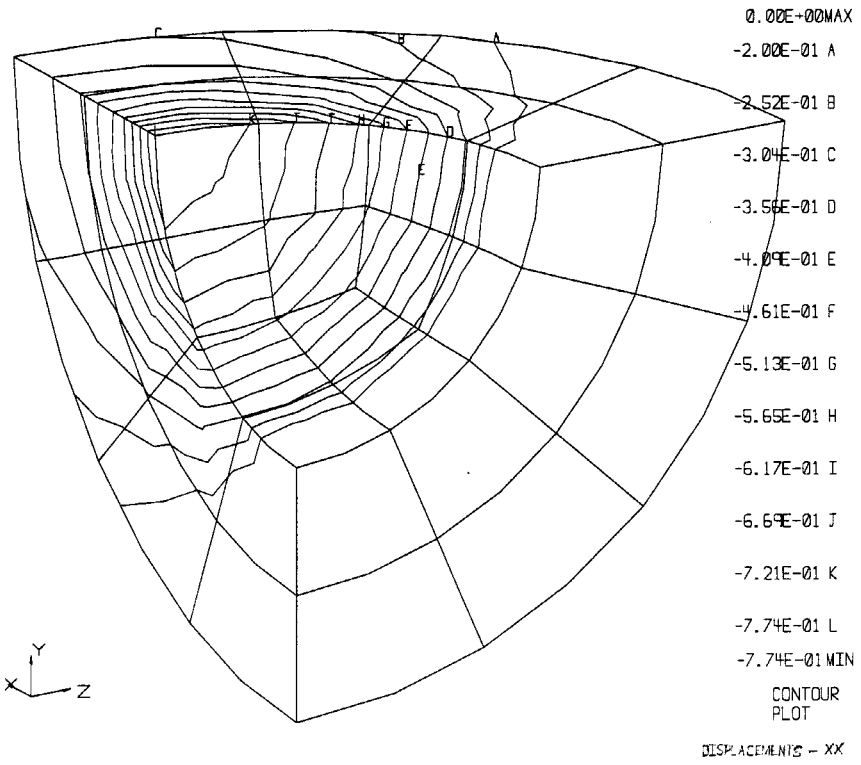

Fig. 6.4.3.4

Contours - Contour Range option :

Enter the mode:	MAN
Enter function range (lower, upper limit):	-0.2, -10
Enter number of contour levels:	12

Notice that even if you reversed the lower and upper limits by mistake, the system not only reverses the values but also limits the lower limit to the minimum of the chosen function.

6.5 DEFINE COLOR BAR

For contour plots or fringe plots, the red, green, blue (RGB) components of the contour levels are pre-selected by the system. The default values are supplied in the file COLORBAR. There are 8 levels in that file. The corresponding RGBs are:

Level	Red	Green	Blue
1	1.0	0.1	0.1
2	1.0	0.7	0.7
3	1.0	1.0	0.0
4	0.0	1.0	0.0
5	0.0	0.0	1.0
6	0.0	0.9	0.9
7	0.7	0.7	0.7
8	1.0	1.0	1.0

This option allows you to change the RGB value of one or more levels in the following ways:

1. Interactively define the level number to be changed, followed by three values for the RGB components of the required color.

2. Create/Edit a file named ‘‘COLORBAR’’ where the level numbers and respective RGBs are listed. Eight levels and their RGBs (as given above) are written to the file given with the distribution tape. You may change values in this file and use up to 12 lines to define a maximum of 12 levels. If you accidentally delete this file, just create one with up to 12 lines containing the level number followed by the red, green and blue component values. Every time you execute BESTVIEW and read a NEUTRAL file or download the results from the RES3 file, select this option to load your chosen colors for subsequent fringe and contour plots.

3. Use the colors selected by the system. You may have changed colors through the above mentioned options and may wish to see the colors picked by the system. In that case, you can go back to the system colors.

The following queries are asked:

```
Do you want the system colors?
```

Select YES or NO, depending on what you want.

If you select YES, no further questions are asked. If you select NO, then the system will ask:

Colors from the file: COLORBAR?

Select YES or NO

If you select YES and the file COLORBAR exists (containing up to 12 lines of data representing the level and corresponding RGB values), then no further questions are asked. If the file COLORBAR does not exist in the working directory, or if you select NO, the system will give you a list of existing levels and corresponding RGB values, thus helping you to select the level number you wish to change. This is the interactive mode.

Enter the color level and RGB value

Enter 1 integer and 3 real values.

You may change more than one level. Remember that level numbers listed represent, from top to bottom, the contour labels or fringe blocks shown on the right of the screen. Thus, level number 1 will always signify the top-most color of the fringe block.

For example, if you want to change the fourth level from one color to green, enter:

4, 0.0, 1.0, 0.0

and select OK.

When you are done with the interactive mode, select the OK or CANCEL button to exit this mode. The next display (DRAW or CDRAW) will show the changes made, provided you are in the LINE CONTOUR or FRINGE PLOT mode.

6.6 DEFORMED GEOMETRY

This option is only available when you have either a result file (*file*.RES3) in the current working directory, or you have already read in the GPBEST results (refer 6.3) through the NEUTRAL file. In case you have not brought in results, the system will tell you to:

```
Select READ GPBEST RESULTS first to read results from
the NEUTRAL file
```

Assuming that you have the results in the BESTVIEW database, the system will ask you to:

```
Select any one:
ON      OFF
```

If you select OFF, the undeformed geometry of the model is displayed. Shaded view, contour plots and fringe plots are displayed on the undeformed model.

When you select ON, the next query is:

```
Enter scale factor mode:
```

A character input is expected.

The options are AUTOMATIC and MANUAL. Only when you enter MANUAL, will the system ask you to:

```
Enter Displacement scale factor:
```

The default scale factor is displayed. Press ESC to clear this value and enter the value you want.

At this point, we would like to recommend that you select AUTOMATIC scaling first. Then, if you really want to change the scale factor, select MANUAL and note the default value. Enter the scale factor value accordingly.

The next time you issue a display call through DRAW/CDRAW, if you have selected the deformed geometry as ON, the system will ask you:

Do you want the UNDEFORMED shape also: (Y/N)?

If you want the undeformed shape along with the deformed one, enter *Y* above. The undeformed shape is drawn in dotted line-style and the deformed shape is in solid line-style. Whenever you draw the deformed geometry for a 3D model, it is always displayed with hidden lines ON. Even if you turn HIDDEN (under DISPLAY OPTIONS, Chapter 2) OFF, the moment the system senses that you want a deformed model, it will turn HIDDEN as ON internally.

Here we give you an example of what happens when you provide excessive scale factor values. What quantifies *excessive* varies from model to model and has to be found out interactively. But in case you give a scale factor value and observe an odd (compared to what you *feel* should be correct) configuration, try giving a lesser scale factor value.

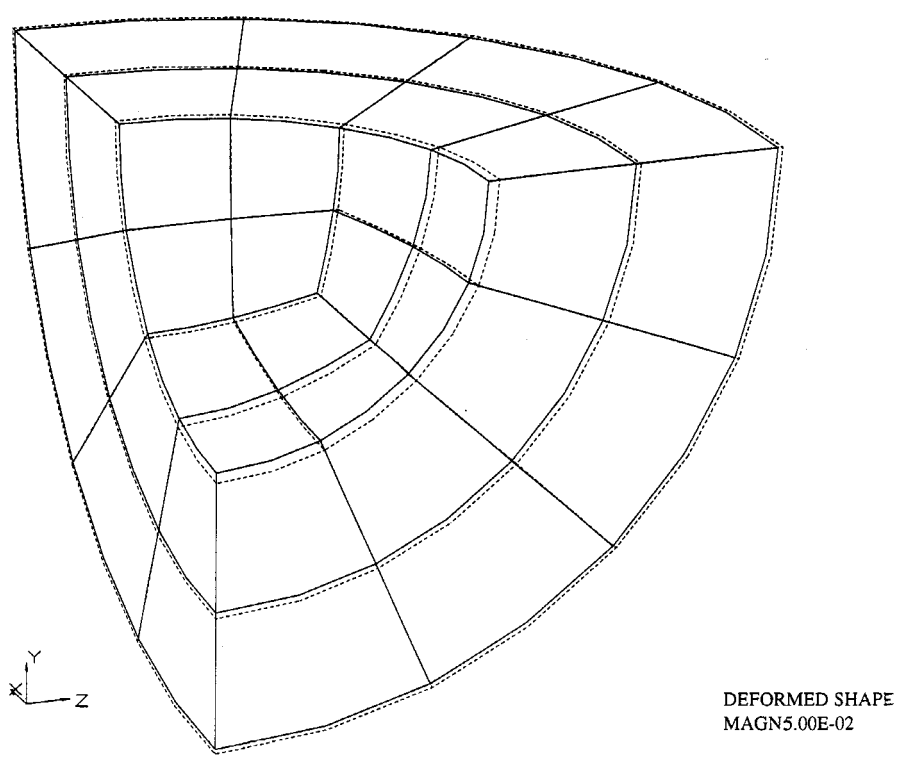

Fig. 6.6.1 Undeformed Shape Shown by Dashed Lines

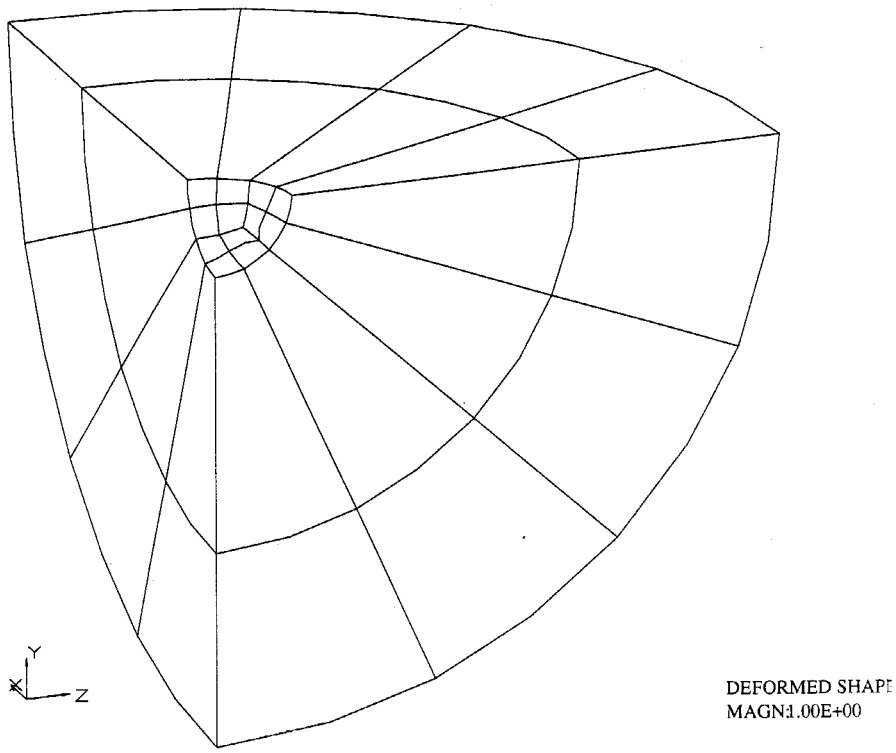

Fig. 6.6.2 Deflection Comparable to Model Size

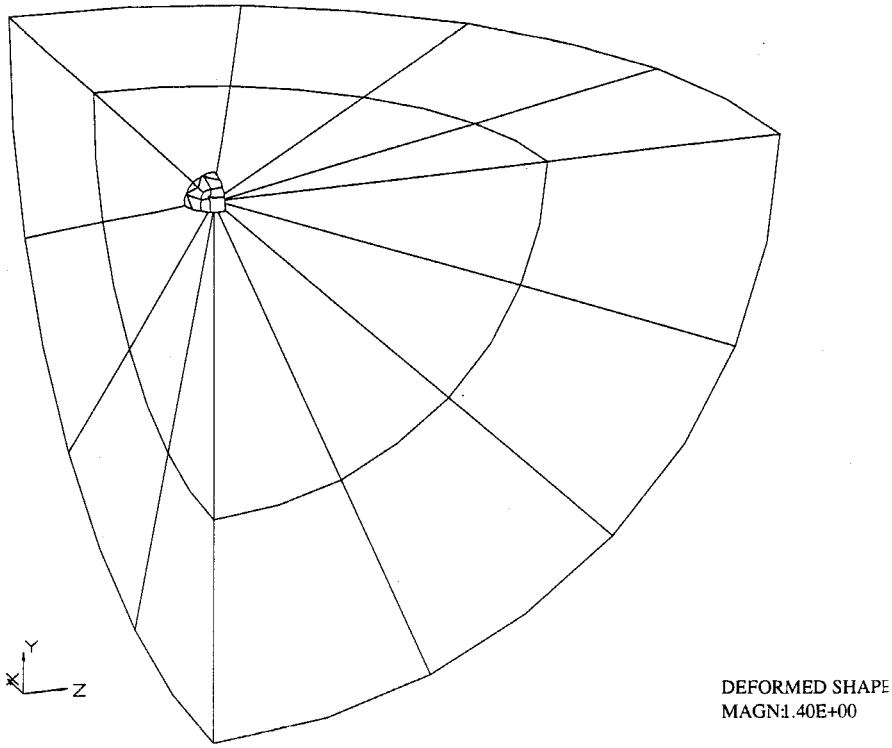

Fig. 6.6.3 *Excessive* Scale Factor Value Reversing the Inner Surface Curvature

6.7 XY PLOT

The xy-plot option allows you to visualize data graphically. The data may originate from a datafile with a simple format or it is automatically extracted from the database once you specify the node numbers and the function which is to be plotted after you have read in the results using POST-RESULTS⇒READ GPBEST RES. option.

6.7.1 PLOTTING DATA FROM A FILE

BESTVIEW allows you to plot data from a file with a very simple format. You can plot multiple datasets on the same graph using the same format. Here is a typical datafile for an xy-plot with two data sets to be plotted on the same graph. The name of the file is *shell.dat*.

Axisymmetric Analysis
Surface Pressure
2 (=> total number of data sets)
Time (sec)
Displacement (feet)
9 (=> data points in 1st set)

−30	−0.010
−20	0.000
−10	0.020
0	0.100
2	0.150
4	0.020
10	0.001
20	0.001
30	0.000

11 (=> number of data points, 2nd set)

−30	0.020
−20	0.000
−10	0.000
0	0.100
2	−0.200
4	0.300
6	−0.200
8	0.050
10	0.010
20	0.001
30	0.000

Note that a ‘‘$’’ in the first column represents a comment line. This can be placed anywhere within the data file and the entire line will be ignored by the program.

We allow up to two lines for the specification of the headers for the entire graph. These headers can either be specified in the datafile or can be interactively specified once you have read in the datafile. Thus, the first two lines in the file *shell.dat* (Axisymmetric Analysis and Surface Pressure) represent the graph headers, which are displayed at the top of the graph. Notice that you need

not specify the headers in the datafile, and that you may choose to specify only one header, which will then be treated as the major header for the graph. Thus, you could start your datafile without lines 1 and 2 of the file shown above.

The first number in your datafile must specify the total number of data sets you wish to plot (in *shell.dat*, it is 2). Currently, this is specified on the third line of *shell.dat*.

Following the number of datasets, you can specify titles for the x and y axes in the datafile.

Time (sec) and **Displacement (feet)** are the x and y axis titles in *shell.dat*. Once again, these two lines are optional. You may choose to create the titles interactively using POST RESULTS⇒ XY-PLOT⇒TITLE⇒AXES.

The number following the axes titles represents the number of points in the current dataset. This is 9 in *shell.dat*. Following this, you can specify the x and y values for this set (lines 7-15 of *shell.dat*). Once you complete the points in one set, specify the number of data points in the next set and repeat the sequence discussed earlier (lines 17-27 of *shell.dat*).

Once you have created a file in the format described, select the POST RESULTS⇒XY PLOT option.

Enter the datafile name (default: $xyplt.dat$)

Specify the datafile name (including absolute path, if necessary).

Once the data is read in, use the CDRAW option to view the graph. Figure 6.7.1.1 represents the plot for *shell.dat*.

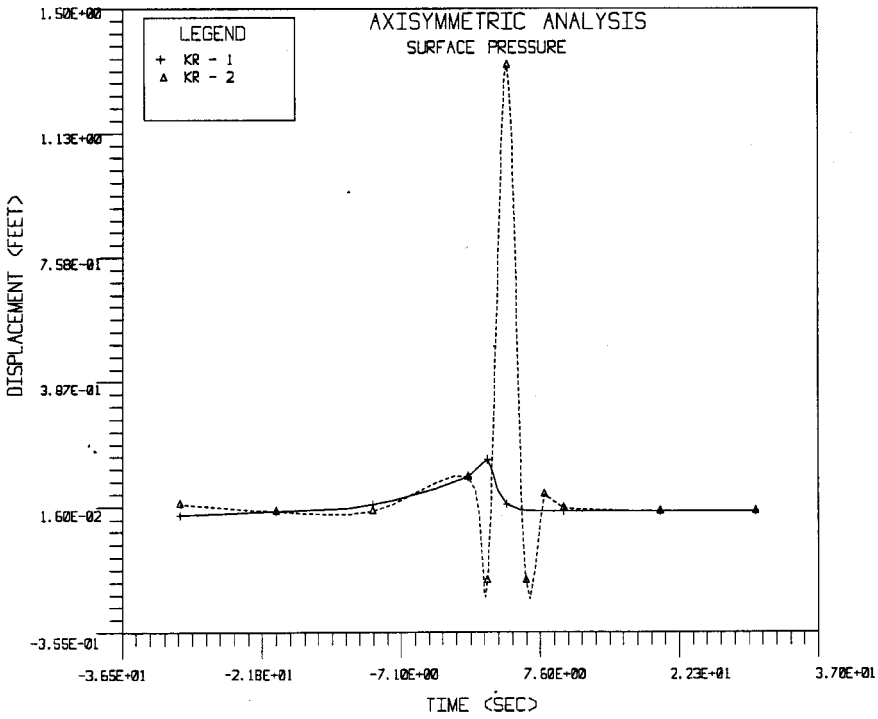

Fig. 6.7.1.1 Plot Generated for the Above Data

6.7.1.1 READING MULTIPLE DATA FILES IN THE SAME SESSION

You can read multiple data files in the same session, without exiting from BESTVIEW. To illustrate, once you have read in a file such as *shell.dat* and have viewed it, you may want to view another file, say, *plot.dat*. Select the POST RESULTS⇒ XY-PLOT option.

```
Clear existing database for xy plot (Y/N)?
(default: NO)
```

If you wish to view another file at this stage, specify Y in response, or else specify N. If you have specified Y in response, the existing database is cleared and you can read in another datafile.

```
Enter the data file name
(default: xyplt.dat)
```

Specify the new data file name, including absolute path if necessary.

If you specify N in response, the existing database is preserved and you can continue analyzing the previous graph.

6.7.2 PLOTTING NODAL RESULTS

BESTVIEW allows you to plot nodal results automatically, provided you have read in the results using POST RESULTS⇒READ GPBEST RES. We allow three types of nodal result plots:

(i) Result vs. Relative Nodal Distance

(ii) Result vs. Result

(iii) Result vs. Time at a specific node

Once you have read in the results using POST RESULTS ⇒READ GPBEST RES., you can manipulate the model view so that you can easily view the nodes at which you want to plot the results. For instance, you can turn the node labels ON, zoom into a required section of the model or highlight specific nodes or elements. This is demonstrated in the following example.

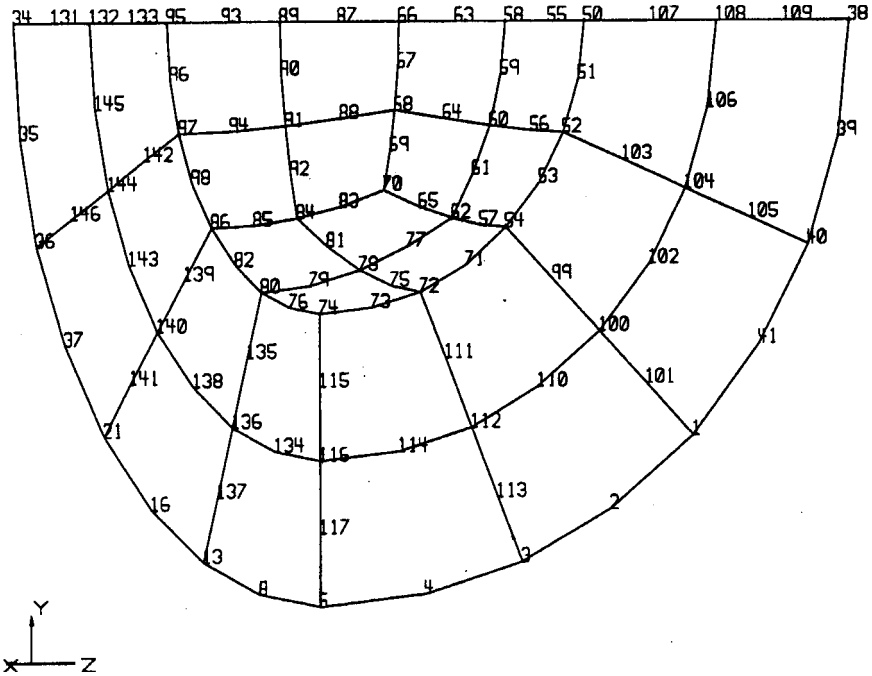

Fig. 6.7.2.1 Required Model with Results

If you wish to view nodal results for certain nodes on the inner sphere, you could zoom in appropriately so as to focus on the required nodes. This is illustrated below.

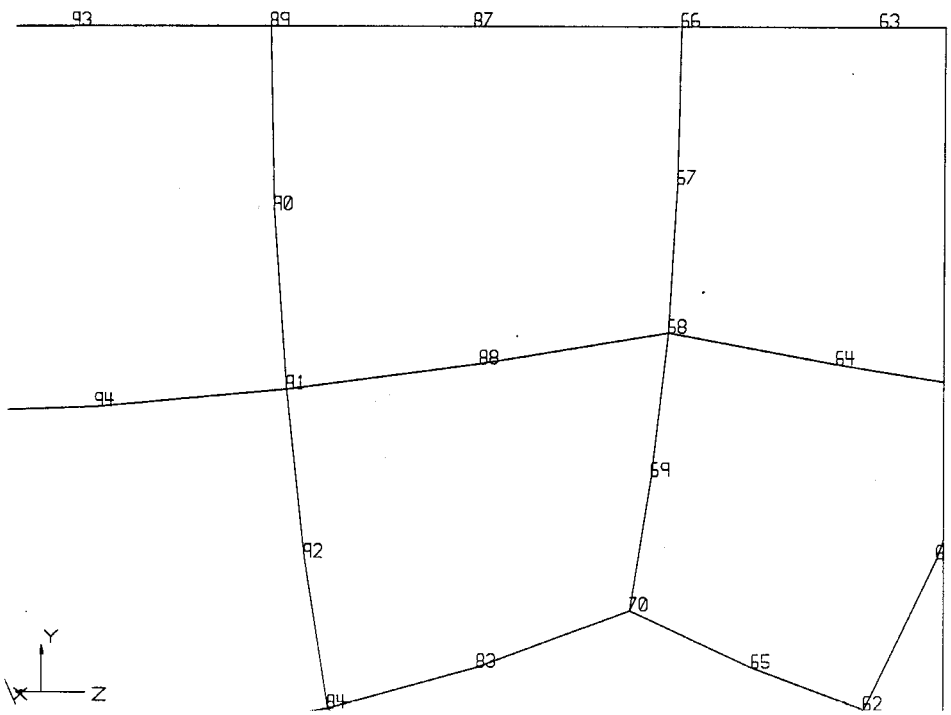

Fig. 6.7.2.2 Zoomed View of Same Model Showing Required Nodes

At this stage, you can turn the digitizer ON if you desire to select the nodes interactively. Or else, if there are only a limited number of node numbers, you may choose to input them manually.

Select XY-PLOT option at this point.

> All (R)esults or Results vs. (N)odal dist or Result vs. (T)ime
> (default: N)

Specify R if you wish to plot Results vs. Results at specific nodes, or N if you wish to plot the Results vs. Nodal distance. You can also choose to abort the process by pressing the ESC key twice.

If you selected N above ,

> Enter desired scalar function
> (default: STRESS)

Specify the function type you wish to plot over the set of nodes (i.e., STRESS, STRAIN, SCALAR, DISPLACEMENT).

Enter desired component of the scalar function
(default: VON-MISES)

Specify the component of the function you wish to plot. This could be the xx, yy, zz, xy, xz, yz stress or strain, or alternatively, the x, y, z or rms displacement.

If instead, you had previously selected R,

Enter desired scalar function
(default: STRESS)

Specify the function type to be plotted along the x axis.

Enter desired component of the scalar function
(default: VON-MISES)

Specify the component of the above function type.

Enter function to be plotted on the y axis.
(default: STRAIN)

Specify the function type to be plotted along the y axis.

Enter desired component of the scalar function
(default VON-MISES)

Specify the component of the above function type.

If the digitizer is OFF at this point,

Range may be given by $< - >$ between the lower and higher numbers. Multiple ranges may be given in line along with individual values separated by $<,>$.
To END input, give a $< \cdot >$ at the beginning of the request.
Give node numbers:

As an example,

Give node numbers:	1, 2, 5, 7, 8, 25
Give node numbers:	17
Give node numbers:	.

or for a range type input

Give node numbers:	1, 21-35, 71, 72
Give node numbers:	75-81, 17-19
Give node numbers:	.

If the digitizer is ON,

Detect nodes (e) exit, (a) abort, (k) keyboard

Select the required nodes and use (e) to end selection.

Say you selected a Von-Mises stress vs. relative nodal distance plot for the nodes 94, 91, 88, 68 and 64 from Fig. 6.7.2.2 :

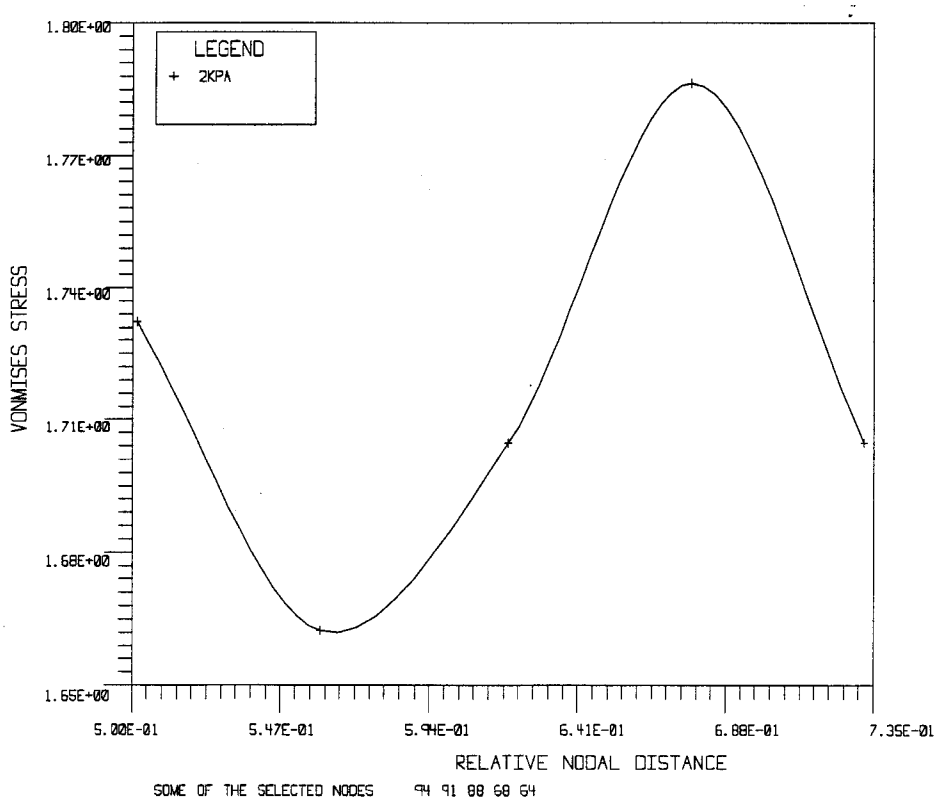

Fig. 6.7.2.3 Result vs. Nodal Distance Plot

Figure 6.7.2.3 represents such a plot. Note that the axes titles are automatically set for nodal result plots. Also, some of the selected node numbers (or all of them, if their number is less than 10) are displayed below the plot automatically for your reference.

Another scenario might be to select a Von-Mises strain - Von Mises stress plot over the same set of nodes. Figure 6.7.2.4 represents the plot with axis titles automatically set and the selected nodes displayed at the bottom of the graph.

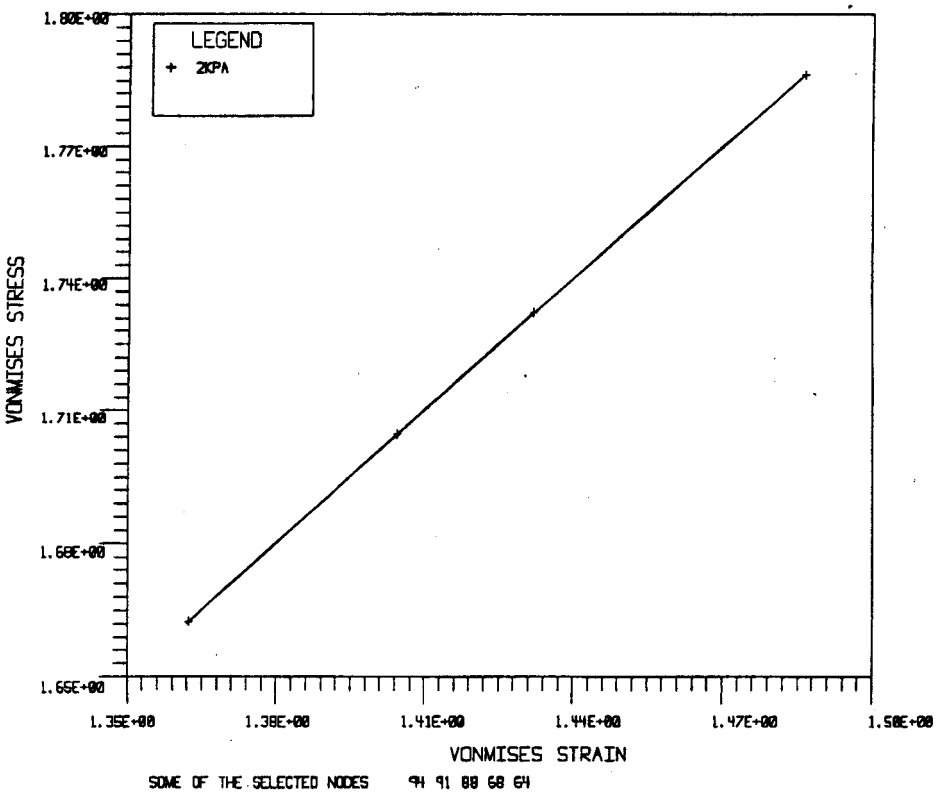

Fig. 6.7.2.4 Result vs. Result Plot

If instead you had previously selected (T), this would give you a result vs. time plot at a specific node. The results at the node over all the time steps are picked up from the neutral file and displayed.

Enter the desired scalar function (default: STRESS)

Specify the function to be plotted on the y axis.

Enter desired component of scalar function (default: VON MISES)

Specify the component of the function type.

For the model displayed below, a transient analysis was performed with 3 time steps.

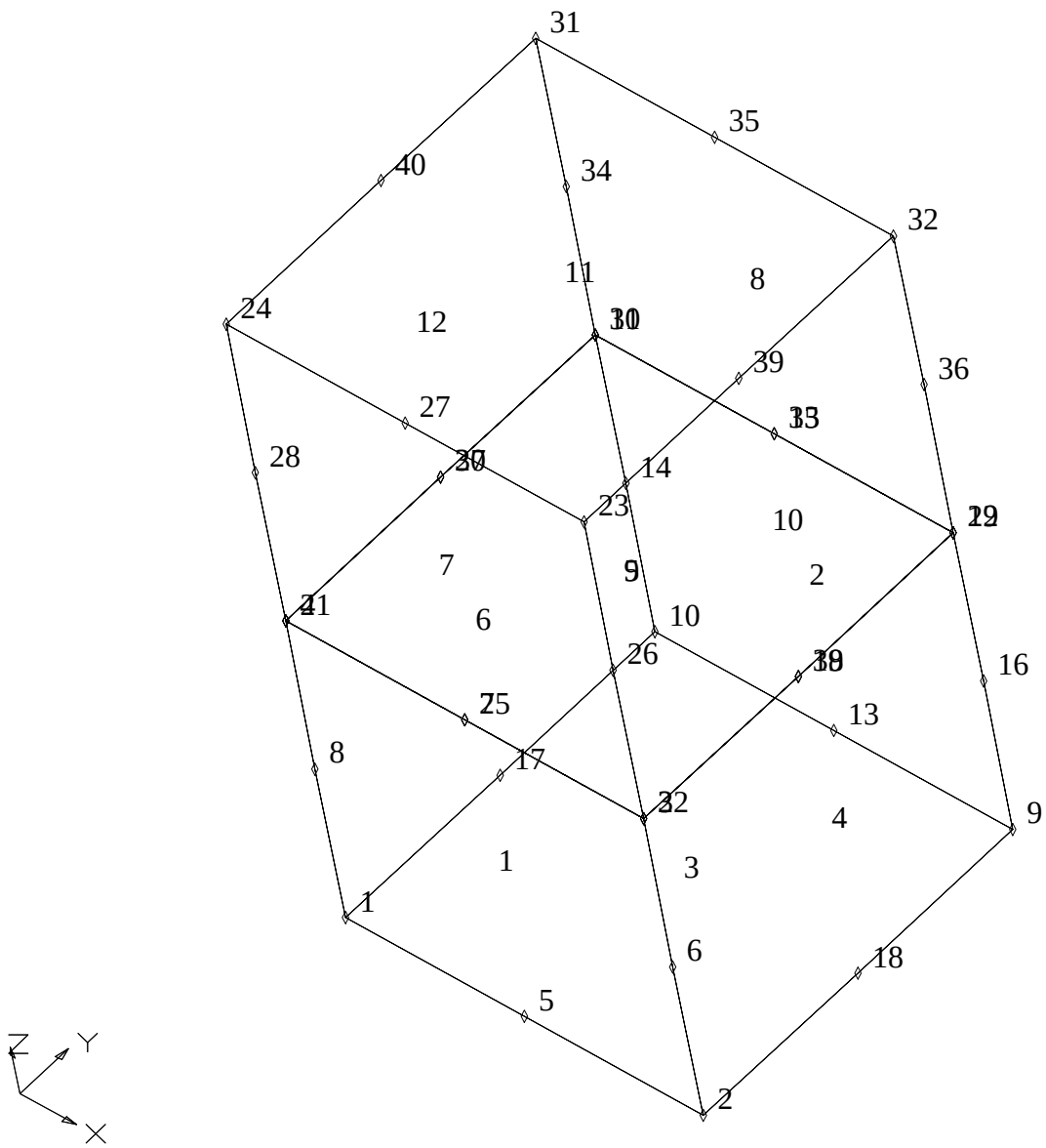

Fig. 6.7.2.5 Model on which a Transient Analysis was Performed

The following plot was obtained for node number 24 using the time plot option over the twice time steps.

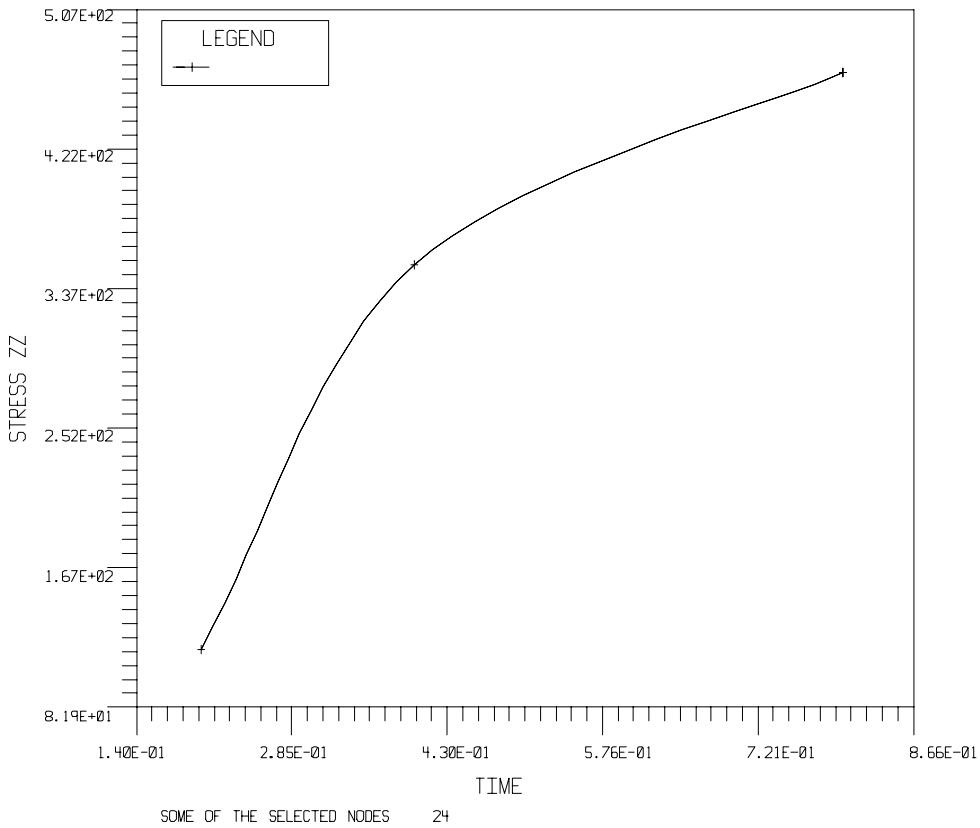

Fig. 6.7.2.6 Time Plot for Node 24 Over 3 Time Steps

6.7.3 TITLE

The TITLE option allows you to specify titles for the axes, the legend and main headers interactively. You could also specify the headers and axes titles in the datafile, as discussed earlier.

6.7.3.1 AXIS

The AXIS option allows you to specify the x and y axis titles respectively.

```
Give the x axis title [A/a] to abort:
Give the y axis title [A/a] to abort:
```

Specify respective titles up to a maximum of 80 characters.

6.7.3.2 LEGEND

The LEGEND option allows you to specify titles for the legend.

```
Give the FIRST legend title [A/a] to abort:
```

Once you select this option, you will be required to specify titles for as many legends as there are data sets.
Specify the legend title up to 10 characters in length.

6.7.3.3 HEADER

The HEADER option allows you to specify the header titles.

```
Give the FIRST header title : [A/a] to abort:
Give the SECOND header title : [A/a] to abort:
```

Specify the header titles up to 80 characters in length.

6.7.3.4 POSITION HEADER

After the HEADER option is selected and a CDRAW - command executed, the two header-lines appear on the X-Y plot. It may be necessary to move these lines to some other position on the screen. This can be done by selecting the current option. The digitizer mode is automatically activated and the user is asked to select the locations for the two header lines. The selected locations would define the lower left corner of the character strings defining each header line.

6.7.4 ICON DISPLAY

The ICON DISPLAY option allows you to turn the display of ICONs ON or OFF for a specific dataset or all datasets in a graph.

```
Enter dataset number for ICON display:
<99> for all sets
```

Specify an integer value representing the dataset number, whose ICON DISPLAY is to be set.

```
Enter ON or OFF
```

Specify if the ICONs are to be turned on or off.

In situations with numerous data points, you may wish to turn off the display of ICONs.

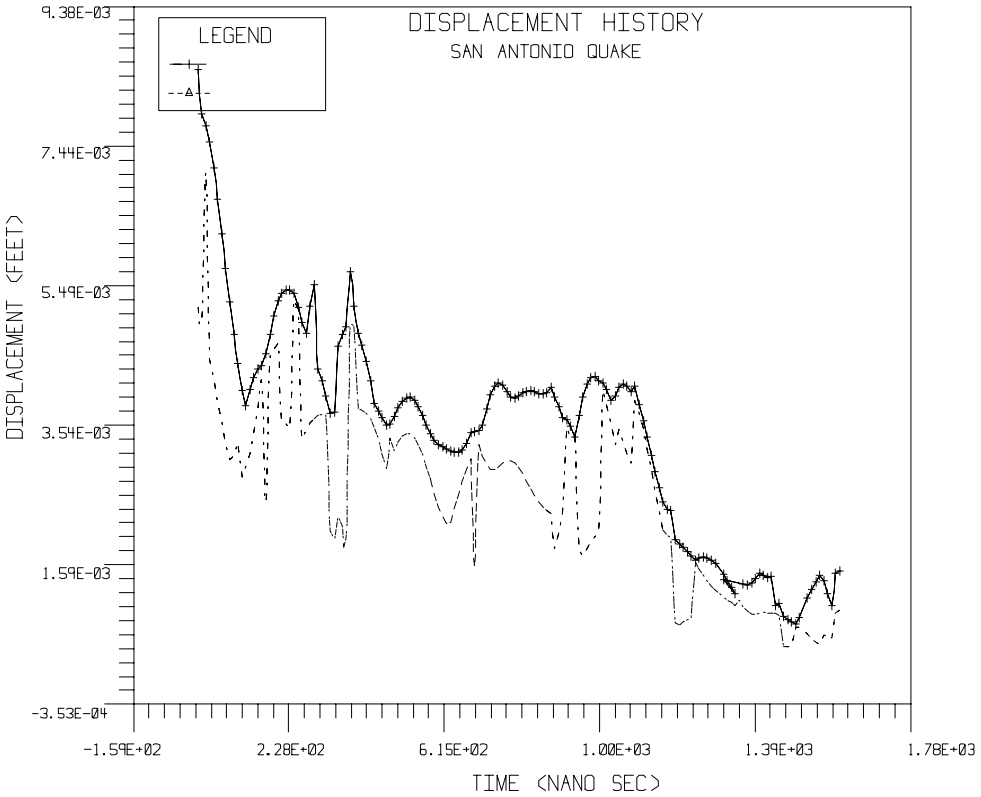

Fig. 6.7.4.1 ICONs Turned Off for Dataset 2

6.7.5 LINE DISPLAY

The LINE DISPLAY option allows you to turn the display of lines connecting the data points ON or OFF for a specific dataset or all the datasets in a graph.

```
Enter dataset number for line display:
<99> for all datasets
```

Specify an integer value representing the dataset number whose LINE DISPLAY needs to be set.

```
Enter ON or OFF
```

Specify if the LINES are to be turned ON or OFF.

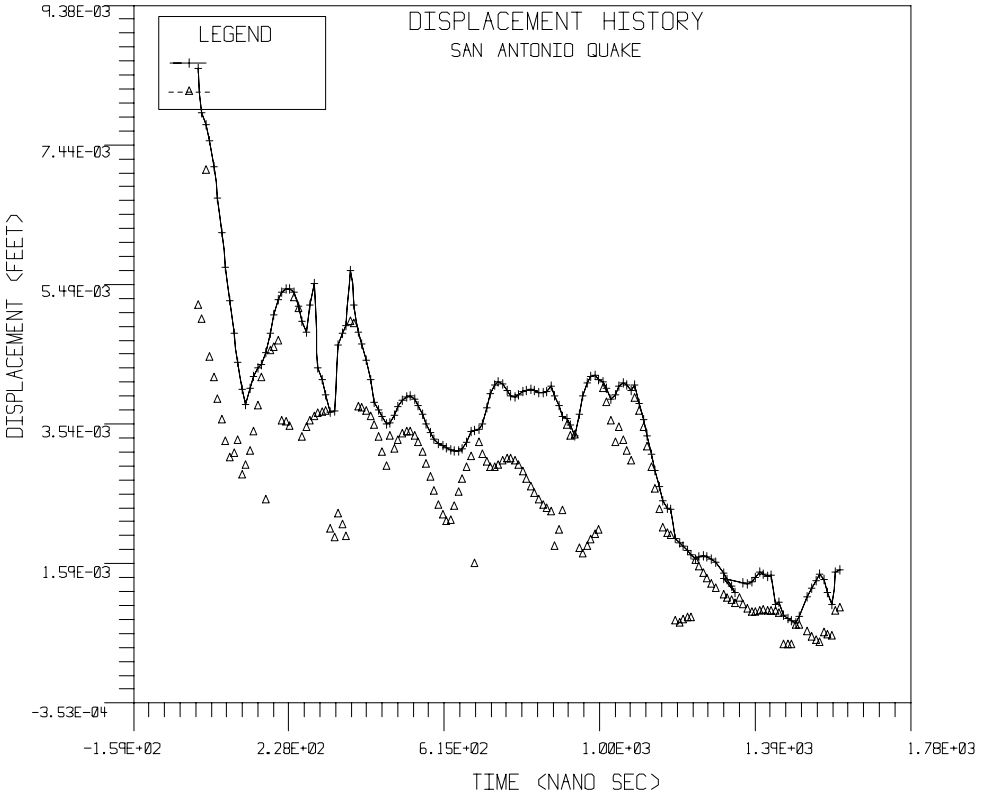

Fig. 6.7.5.1 Lines Turned OFF for Dataset 2

In certain situations, the display of lines connecting the data points would be meaningless due to a lack of order in the data points. Figure 6.7.5.2 represents a simple bifurcation data plot. In this situation, the display of lines connecting data points would be meaningless.

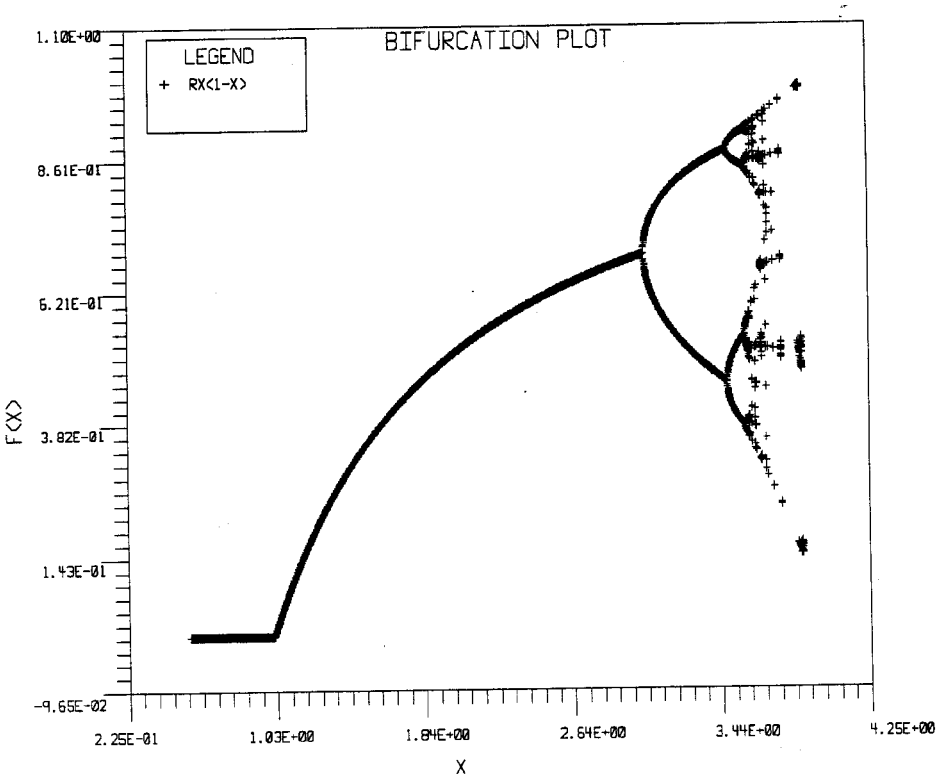

Fig. 6.7.5.2 Bifurcation Plot Illustrating a Case Where Lines Could be Set Off

6.7.6 LEGEND

This option allows you to customize the legend box. You may display the legend with or without the border, or you may cause the whole legend block to disappear or move to some other convenient position on the screen. The appropriate options will now be discussed.

6.7.6.1 LEGEND BLOCK

The entire legend block may be turned OFF by selecting this option.

```
Enter ON or OFF (default: ON)
```

Select CDRAW to see the effect.

6.7.6.2 MOVE LEGEND

The legend block appears at a pre-selected location of the screen. If you wish to move the block or adjust the size of the border, then select this option. Once this option is selected, the system will ask:

```
Detect upper left corner of legend box
```

Take the cursor to the position on the screen where you wish to locate the upper left corner of the legend block and click there. The system will then ask:

```
Detect lower right corner of legend box
```

Move the cursor to identify the lower right corner of the legend block and click there. Issue a CDRAW command to see the effect.

6.7.7 SCALE

When xy datasets are read in, the default XY-plot displayed on the screen considers the limits as values greater than the maximum and lesser than the minimum over both x and y axes. To choose your own limits, select this option. The default is AUTOMATIC.

6.7.7.1 AUTOMATIC

For all datasets, let:

VXMAX = maximum of all the X-values
VXMIN = minimum of all the X-values
VYMAX = maximum of all the Y-values
VYMIN = minimum of all the Y-values

Then, this option will set the axes values at:

DX = VXMAX-VXMIN
DY = VYMAX-VYMIN
Min. X = VXMIN-0.10$*$DX
Max. X = VXMAX+0.10$*$DX
Min. Y = VYMIN-0.10$*$DY
Max. Y = VYMAX+0.10$*$DY

Note that there are always six primary tick marks over both the X- and Y-axis.

6.7.7.2 MANUAL

Use this option whenever you wish to plot XY datasets over a pre-determined range along an X and Y axis. It should be noted that the default XY plot will always give you a very good idea about the distribution of data as well as the lower and upper ranges of values along the axes. Since the default (as well as the AUTOMATIC scale selection) setting uses the data values, the upper and lower ranges calculated within, could have undesirable values for presentation purposes. It may be more useful in certain circumstances to define the X and Y range as the nearest multiple of 5 or 10, taking into consideration that there would be 5 divisions (6 primary ticks) along each axis. When you select this option, the system asks:

```
Specify Min-Max values for X Axis
Specify Min-Max values for Y Axis
```

For each of the above queries, two values must be specified. Considering the notations used in Article 6.7.7.1, if the min-X is greater than VXMIN, the min-X value is taken as VXMIN. Similarly, if the user gives a max-X which is less than VXMAX, the max-X value is taken as VXMAX. Values on the Y-axis are similarly modified.

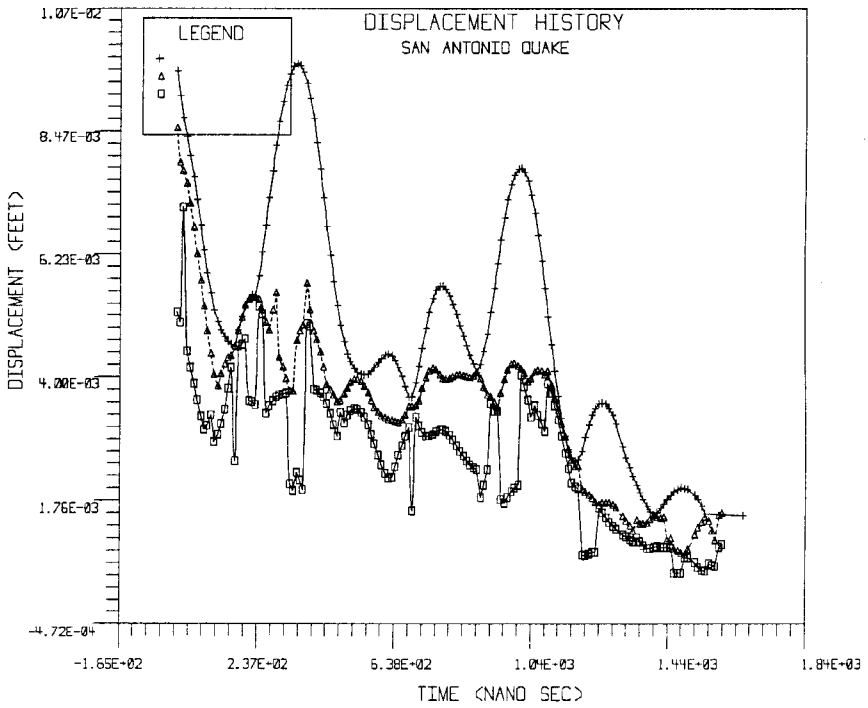

Fig. 6.7.7.1 An XY Plot Immediately After Reading the Data

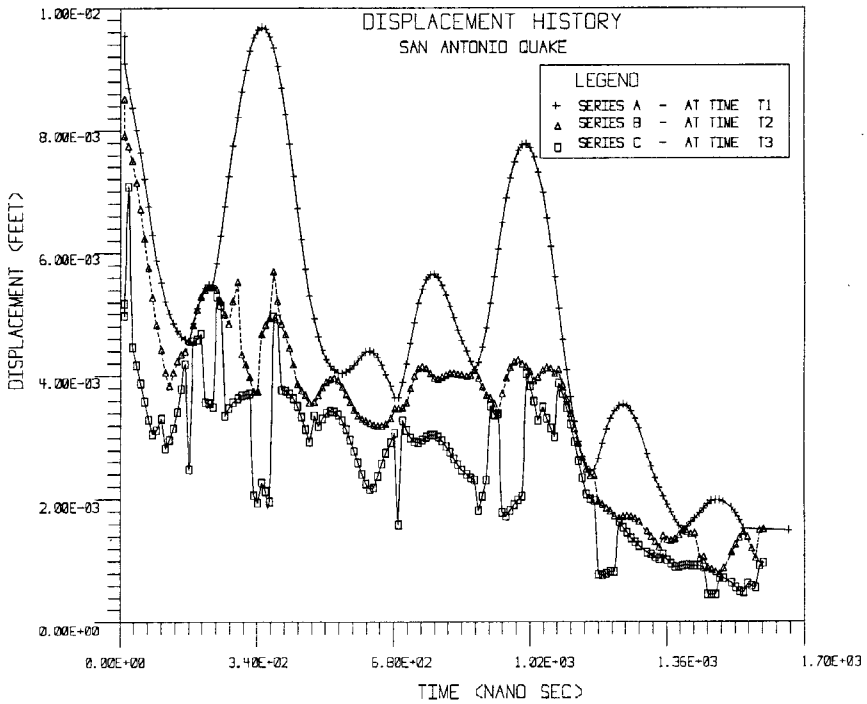

Fig. 6.7.7.2 After using (a) XY Plot - Title - Legend; (b) XY Plot - Legend - Attributes; (c) XY Plot - Scale - Manual

6.7.8 FIT

This option allows you to use either a straight line or a spline fit through all the data points of each dataset. The default is a spline fit.

6.7.8.1 LINEAR

Select this option if you want adjacent points to be connected by straight lines.

```
Enter ON or OFF (default: OFF)
```

If you select OFF, the system will use a SPLINE fit.

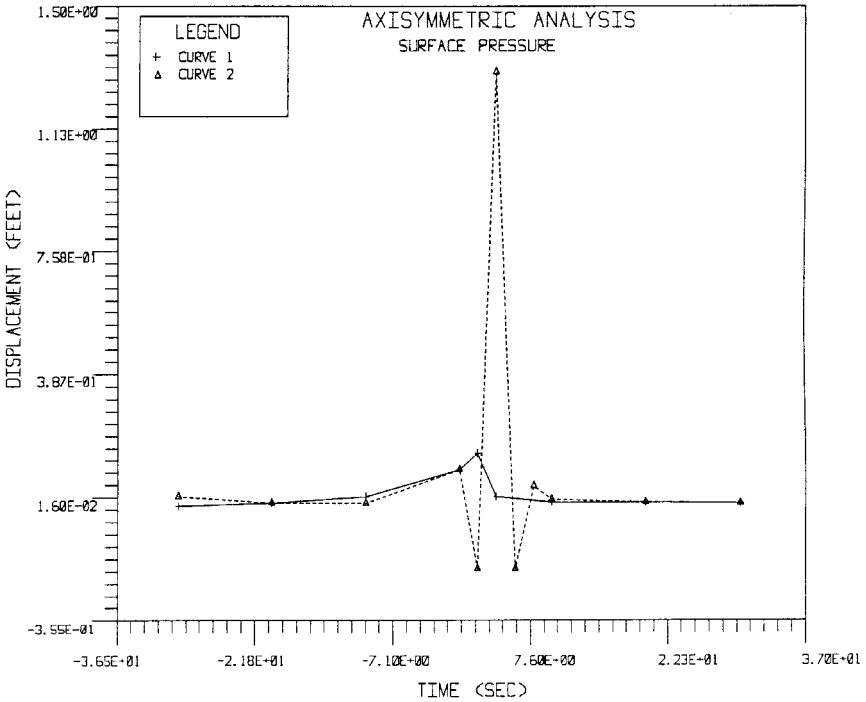

Fig. 6.7.8.1 Using a LINEAR Fit for Fig. 6.7.1.1

6.7.8.2 SPLINE

Select this option if you want a spline fit. The default is a spline fit.

```
Enter ON or OFF (default: OFF)
```

If you select OFF, the system will use a LINEAR fit.

6.7.9 SAVE GRAPH FILE

This option is used to generate an XY dataset in BESTVIEW format for result vs. nodal distance, result vs. result or result vs. time plots. SAVE-GRAPH-FILE cannot be invoked without deleting READ-GPBEST-RESULTS first. Thus, once you have read in the results, selected the XY plot option, the desired nodes and scalar functions, and viewed the plot, you can select SAVE-GRAPH-FILE to dump an XY dataset, which could then be read in directly, without reading in the GPBEST neutral file.

```
Enger the GRAPH FILE name
(default= xyplt.dat)
```

A character input specifying the filename is expected. If the above file already exists in the working directory

```
File already exists, okay to overwrite
(default = no)
```

Specify ‘‘yes’’ or ‘‘no.’’

The xy-data set is dumped, complete with all specified header and axes titles.

6.7.10 MAKE A HARDCOPY OF THE GRAPH

As is the case with most of the utilities in BESTVIEW, you can make a hardcopy of the graph for your reference. Select GLOBAL COMMANDS⇒HARDCOPY (for further details, refer to Chapter 2) for this purpose and issue a CDRAW. The postscript file for the graph is automatically generated, and it can be printed on a laser printer.

6.8 FILE SCALAR RESULTS

This utility allows you to visualize variation of a parameter over a pre-determined grid, either by choosing the FRINGE PLOT or LINE CONTOUR mode. The operation is very much like reading results of a neutral file, except that results here are all single scalar quantities.

When you select this option the system will ask:

```
Enter SCALAR RESULT file name [A to abort]:
```

Give the relevant file name. You may give an absolute path if the file is to be read in from some other directory structure.

The next query is:

```
Do you want a dB-Lin output: [<Y>es, <N>o]:
```

A single character input is expected.

If you answer in the affirmative by giving ‘‘y’’, the system will ask for a reference pressure:

```
Give the reference pressure [gen. 2.1e-05 N/m*m]:
```

A real value is expected.

Note that the above options (the last two) are valid only if the results are ‘‘acoustic pressure’’ quantities and only if you are interested in observing the SPL variation. For any other quantity the answer to the second query should be ‘‘n’’; subsequently the third query would not be there.

Once the data is read inside BESTVIEW database, select CDRAW to view the mesh. To get a fringe/contour plot, select FRINGE PLOT or LINE CONTOUR option from the MODE option and then give a DRAW or a CDRAW.

In the context of GPBEST analysis, you may define your own grid with a connectivity sequence, use the grid points as SAMPLING POINTS in GPBEST, get the results through a GPBEST run and write a short routine to create the SCALAR RESULTS file to observe the parameter variation over the pre-defined grid using the current utility.

EXAMPLE

INPUT FOCUS	COMMAND/DATA ENTRY	COMMENTS
[MENU]	POST RESULTS	
[MENU]	FILE-SCALAR-RES	
[ROOT]	Enter SCALAR RESULTS file: [A to abort]: m2f.samp [OK]	Assume the file m2f.samp is present in the working directory
[ROOT]	Do you want a dB-Lin output: [<Y>es, <N>o]: n [OK]	The results to be plotted are Von-Mises stresses, so there is no use for a dB.Lin form.
[MENU]	CDRAW	Just to display the user defined grid.
[MENU]	MODE	
[MENU]	FRINGE PLOT	
[MENU]	CDRAW	The required fringe plot is displayed.
[MENU]	HARDCOPY	
[MENU]	POSTSCRIPT-SCRN.IMG	
[PROMPT]	[NO]	We do not want a COLOR postscript file.
[MENU]	DRAW	
[ROOT]		Message appears in the [ROOT] window: ‘‘Color PS dump over in file pscolor.ps.’’
[UNIX]	mv pscolor.ps psfile1	Keep the postscript dump as a different file name, as the next color postscript dump will again create a file: pscolor.ps.
[UNIX]	lpr -Pps_prn psfile1	Take a printout through the postscript printer ‘ps_prn’.

The following gives you a description as to how to write a SCALAR RESULTS file:

LINE #	CONTENTS	COMMENTS
l	n	The number of grid (sampling) nodes.
2. . .n+1	np, x, y, z	There are ‘‘n’’ lines of data, each line containing: node no., x, y, z coordinate of that node.
n+2	m	The number of grid cells (elements).
n+3. . .n+2+m	me, $n1$, $n2 \ldots$, nn	There are ‘‘m’’ lines of data, each line containing: elem.no., $n1$, $n2$, $n3$, $n4$, $n5$, $n6$, $n7$, $n8$ or elem.no., $n1$, $n2$, $n3$, $n4$, $n5$, $n6$ where $n1 \ldots n8$ are the nodes defining the element ‘‘me.’’ Note that you can have a 8-noded element or a 6-noded element description.
n+m+3. . . . . . n+m+2+n	$np, value$	The next ‘‘n’’ lines contain node number, scalar result at that node.

A sample data file is enclosed with 309 ‘‘nodes’’ and 92 ‘‘elements’’. The scalar results plot is displayed in Figure 6.8.1.

```
                                                                  COMMENTS
                                                              ----------------
309                                                           no. of nodes
         1001   2.000000      -1.000000       15.00000       data set for
         1002   2.250000      -1.375000       15.00000        nodes
         1003   2.500000      -1.750000       15.00000         "
         1011   2.787010      -1.442910       15.00000         "
         1017   3.030330      -1.030330       15.00000         "
         1016   2.868720     -0.8687180       15.00000         "
         1015   2.707110     -0.7071070       15.00000         "
         1010   2.382680     -0.9238800       15.00000         "
         1004   2.750000      -2.125000       15.00000         "
         1005   3.000000      -2.500000       15.00000         "
         1012   3.191340      -1.961940       15.00000         "
                                                                 "
 ----    ----    ----    ----    ----    ----                    "
                                                                 "
         3017   2.000000      -1.000000       15.00000         "
         3018   1.500000     -0.8660250       15.00000         "
         3019   1.133970     -0.5000000       15.00000         "
92                                                            no. of elements
  1001  1001  1002  1003  1011  1017  1016  1015  1010         data set for
  1002  1003  1004  1005  1012  1019  1018  1017  1011          elements
                                                                 "
 ----    ----    ----    ----    ----    ----                    "
                                                                 "
  3005  3001  3007  3018  3017  3016  3006                       "
  3006  3001  3002  3008  3019  3018  3007                       "
         1001   20.74530                                       data set for
         1002   41.94680                                        results at
         1003   46.86630                                        each node
         1004   44.91370                                         "
         1005   40.51150                                         "
         1006   34.61070                                         "
         1007   26.17120                                         "
         1008   14.54400                                         "
                                                                 "
 ----    ----    ----    ----    ----    ----                    "
                                                                 "
         3016   127.3090                                         "
         3017   207.4540                                         "
         3018   285.2490                                         "
         3019   316.2060                                         "
```

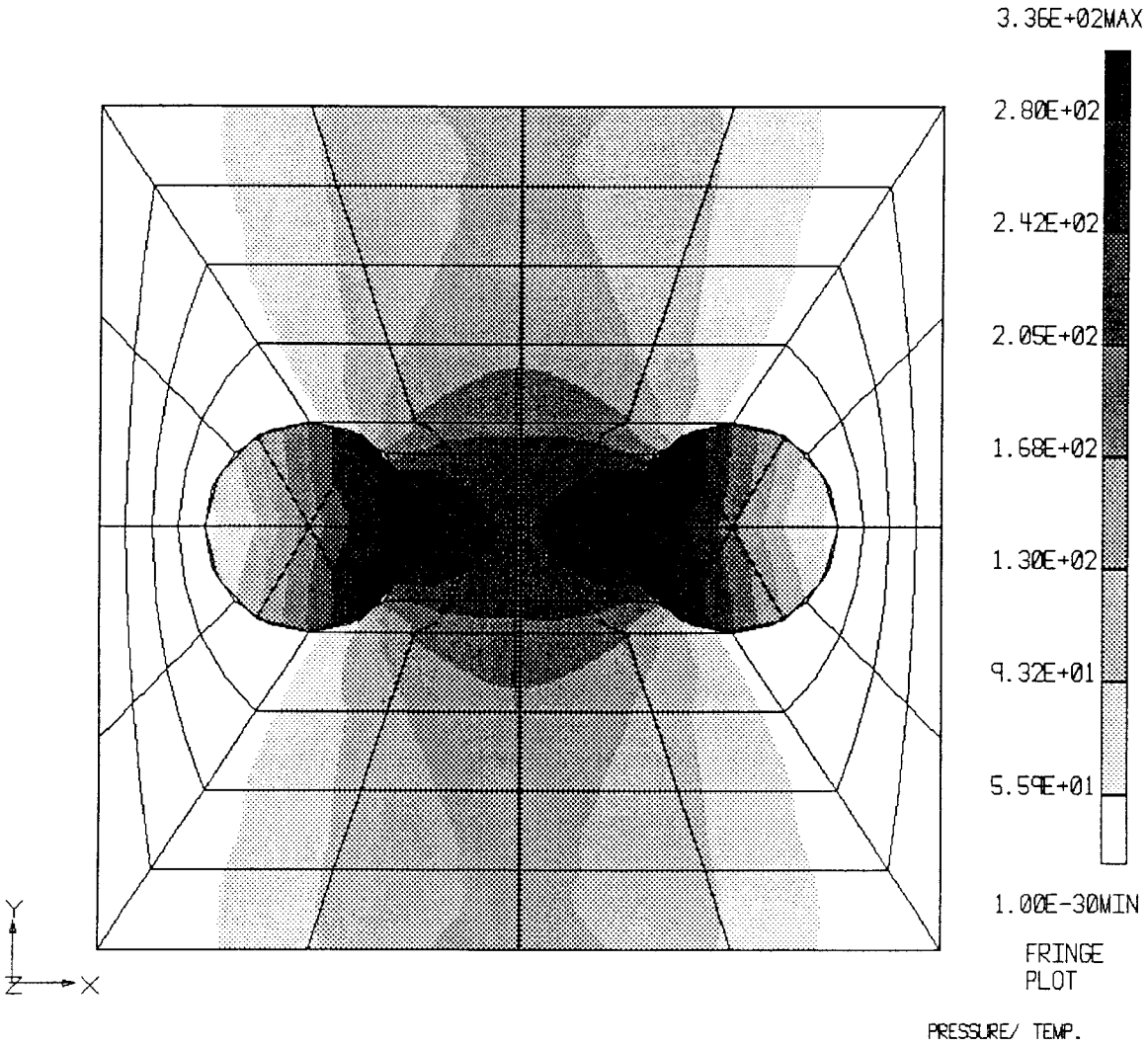

Fig. 6.8.1 Scalar Results Plot for Previous Data

6.9 SWEEP TO XY DATA

If you have produced a sweep-file, say after successfully analyzing an acoustic problem using GPBEST (using a SWEEPFILE and SWEEP PRESSURE POINT option) over a range of frequencies, then you may convert the sweep file information into an XY-data file to be used with BESTVIEW's XY-plot option. When this option is selected, BESTVIEW would say:

```
Enter the sweep file name:
```

A character string is required.

```
Enter the xy-data file name:
```

A character string is required.

Note that two utilities cannot operate on results of a single frequency. Also, this utility handles up to 5000 sampling points per frequency and up to 5000 frequencies. If there are multiple sampling points per frequency, BESTVIEW lists all the sampling point numbers and respective x, y, z coordinates and asks the user:

```
Choose a sampling point from the above list: n
```

An integer input is expected.

A maximum of 20 sampling points may be considered for up to 20 xy-data sets by replying to the following query:

```
Choose: <M>ore, <D>one:
```

A character input is expected.

If DBEM was used for analysis, the following is asked:

```
Select <P>ressure, <X>Velo, <Y>Velo, <Z>Velo :
```

A character input is required.

Note that if IBEM is used, the above query is not asked as the sweepfile contains only acoustic pressure values at the sampling points.

For conversion to xy-data sets, BESTVIEW needs to know:

```
Select <R>eal, <I>maginary, <M>agnitude :
```

A character input is expected.

If you want a decibel (dB) output, then answer the following:

```
Output in dB-Linear? <Y>es, <N>o :
```

A character input is expected.

For a dB output, a reference pressure has to be given:

```
Reference pressure (generally 2.1e-05 N/m**2):
```

A real value is expected.

```
Reference pressure is: <N>umerator, <D>enominator :
```

A character input is expected.

Usually the reference pressure is kept at the denominator, unless you want it to be in the numerator.

6.10 LIMITATIONS

1. For the READ GPBEST RESULTS option, every time you read a neutral file, you can only have a maximum of:

   (a) 18000 nodes, overall
   (b) 8000 nodes/gmr
   (c) 8000 elements, overall

2. For CONTOURS option, a maximum of 12 contour levels.

3. For XY PLOT option:

   (a) A maximum of 5000 XY values over all data sets.
   (b) A maximum of 10 datasets/display.

7.0 NOTES ON FREQUENTLY USED FEATURES

7.1 INTRODUCTION

This chapter discusses the initialization of the database, saving models during a BESTVIEW session and exiting from BESTVIEW with or without saving a file. This chapter also contains a quick display guide and some helpful hints. There are so many display options and viewing options, that it is possible to have an enormous number of combinations of these options to get various desired displays on the screen. We would like to point out the options to select to achieve some of the most frequently used displays while working with BESTVIEW.

If you are using BESTVIEW in the pre-processing stage, there are three functionally different aspects on which you could be working:

a. Defining the geometry of the model.

b. Generating mesh over the model geometry. This may also be associated with creation of additional nodes and subsequent element generation based on some auxiliary geometry definition.

c. Data preparation for GPBEST.

If you are working on the geometry definition, we recommend that you save the model information at regular intervals. The same is also recommended on the mesh generation level. While saving files, generally you should give a different file name from the one you declared when you started your BESTVIEW session. While exiting from BESTVIEW, however, you will be given an option for saving files.

7.2 SAVE OPTION

As was mentioned earlier, you should use this option as often as required; especially before embarking on a new definition of model geometry, so that you will always have a backup copy of the model you are generating. This is most useful, especially in situations where a sequence of commands may mess up the model. In that case, you would be able to load the latest working model by any of the following processes:

a. Exit BESTVIEW. Copy the saved file to the working file name. Invoke BESTVIEW with the working file name.

b. Use the INITIALIZE option to clear the database and use the ASSEMBLE MODELS option giving the name of the saved file.

When you select this option the system will ask you to:

```
Give file name: <A> to abort:
```

If you give a file name that already exists in the working directory, the system will warn you:

```
Given filename already exists!
Do you want to overwrite? <Y>es, <N>o:
```

If you want to overwrite information, (i.e., store the latest model in the same file that you used in your previous SAVE option), enter Y. If you enter N, you will be prompted for the filename again.

In case you give the filename above as the same one that you gave as the model name when you invoked BESTVIEW, the system will tell you:

```
Give some other name! This name has already been defined
while opening BESTVIEW.
```

7.3 INITIALIZE OPTION

This option will initialize the database, i.e., clear all the information currently residing in the database. If you select this option, the system will say:

```
Warning! You are about to INITIALIZE the database.
Everything will start afresh.
Do you want to INITIALIZE? <Y>es, <N>o:
```

Enter *N* if you want to avoid initialization. Choosing this option is equivalent to virtually exiting BESTVIEW and coming back again with a clean database.

7.4 EXIT OPTION

When you select the EXIT option the system will ask you:

Save database file?

Click on the YES or the NO button.

If you click *NO* and exit from BESTVIEW, no files associated with the model (and where applicable, results) would be saved. If you click *YES*, the following files would be saved depending on the operations being performed through BESTVIEW:

1. *file* - the model file.
2. *file.DAT* - if you generated data for GPBEST.
3. *file.EER*, *file.TMP*, *file.ICN* - if you generated data for GPBEST. These files are necessary if you want to visualize the boundary condition icons and for creating GPBEST data in multiple sessions.
4. *file.RES3* - the results file containing information from the READ GPBEST RESULTS option. You need to read in GPBEST neutral file only once. The results file will automatically download results on the model (*file* should be present) in the next BESTVIEW session.

The system prompts:

Exit BestView

Click *YES* if you want to exit or *NO* if you want to continue with your current session.

7.5 QUICK DISPLAY GUIDE

The options to be selected to get a specific display on the screen depends on where you currently are (i.e., under which submenu). But for the sake of generality, we assume that you are on the opening menu level. So, although the selections might at times look a bit lengthy, in actual practice they need not be so; you would be selecting them from the nearest option available to you.

7.5.1 ROTATING A MODEL AND WORKING WITH LABELS

When you generate a model or start a BESTVIEW session by bringing a model, the default setting is *no rotation* (i.e., XY plane of the model is the XY plane of the screen) and labels *on*. To turn the labels *OFF*:

1. Select DISPLAY OPTIONS
2. Select LABEL
3. Select ALL
4. click on OFF

Select CDRAW and check that all the labels have indeed disappeared from the display.

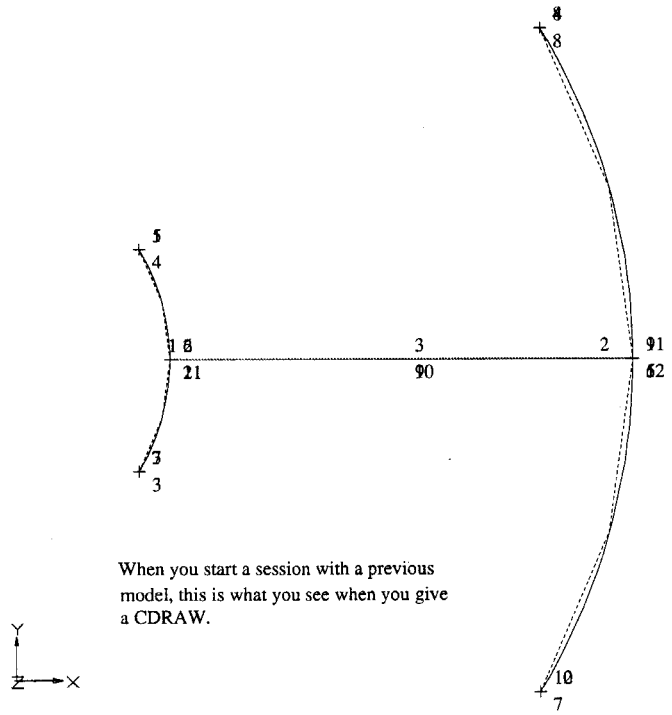

Fig 7.5.1.1 Initial Display

To get the following display:

1. Select VIEW OPTIONS (if you are in some other menu, such as under DISPLAY OPTION - LABEL, then select DISP. LABE UP. Then select DISP UP to come to the main menu).

2. Select ROTATE and enter -30, -30, -30.

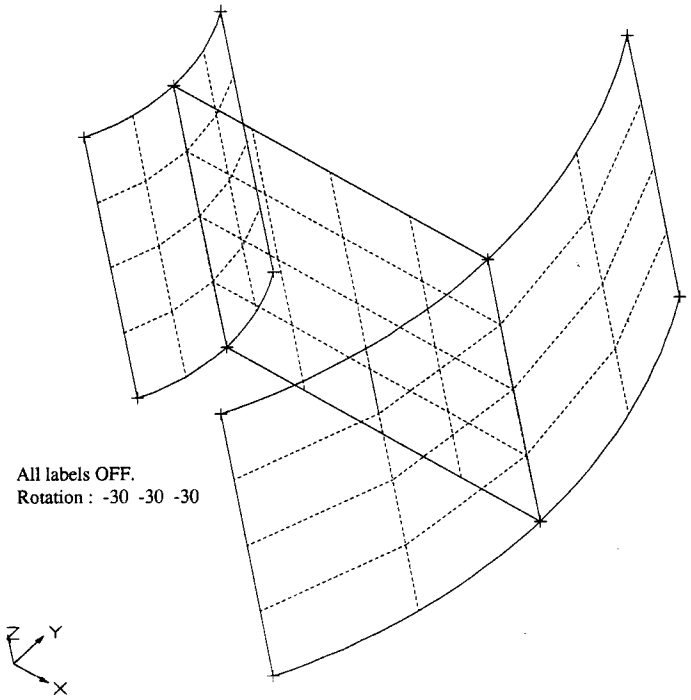

Fig. 7.5.1.2 Rotated View

If you want the line entities only to be labeled and turn off the point entities and increase the surface-fill pattern, follow the steps below:

1. Select DISPLAY OPTIONS - Select LABEL - Select Line. Click *ON*. Check the display by selecting CDRAW.

2. Select DISP. LABE UP - Select ENTITY - Select POINT. Click *OFF*. Check the display by selecting CDRAW.

3. Select DISP. ENTI UP - Select SURFACE-FILL. Click *YES* to fill surface with line patterns. Press ESCAPE key to clear the prompt window. Enter 5. Select CDRAW, which now displays the following:

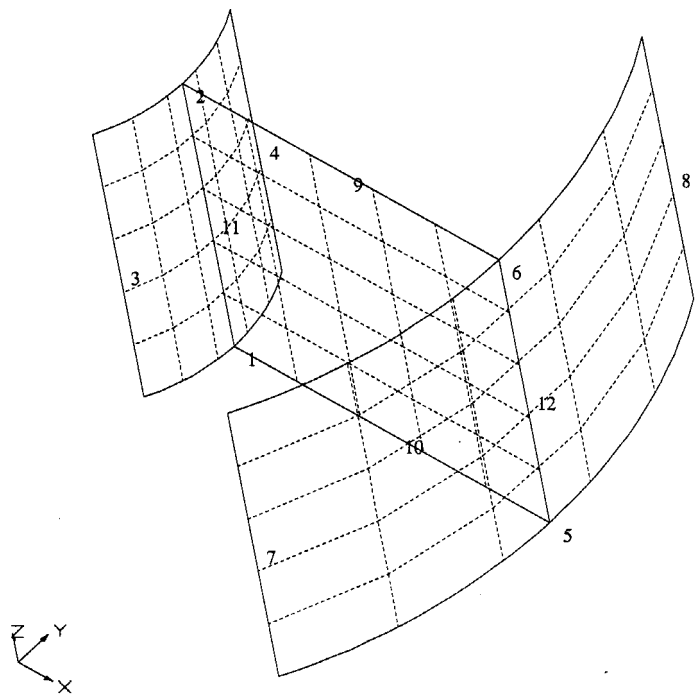

Fig. 7.5.1.3 Turning Specific Entity Labels ON

You cannot have HIDDEN line displays on the patch (surface) level. That will be discussed in the next section when we deal with mesh entities.

If you wish to write some text on the display and want to make a Postscript file of the display, follow this procedure:

1. Select DISPLAY OPTION - Select TITLE.

2. Select HARDCOPY - Select ENCAP. POSTSCRIPT. Enter the postscript file name. Enter maximum line thickness (we suggest 0.005).

3. Select CDRAW. Give the text you want to be displayed. For each line you enter, select the proper position on the screen. End the text input session with a ‘.’

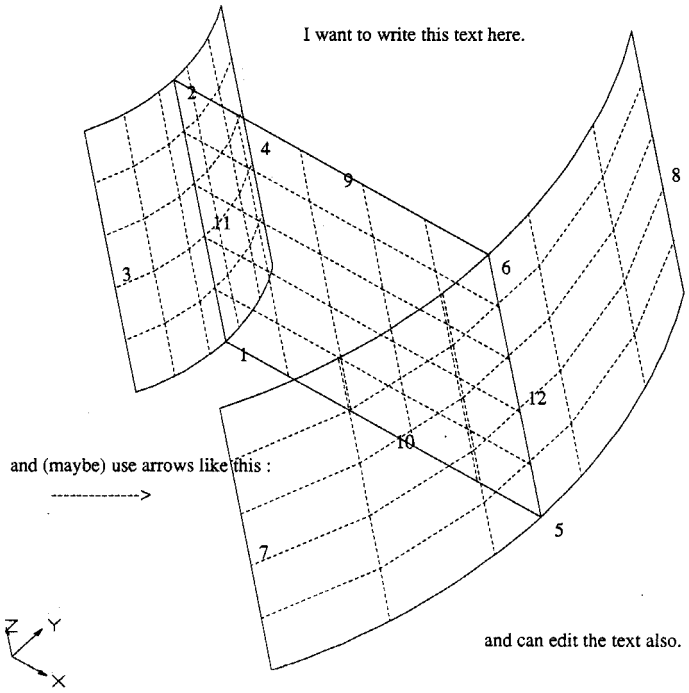

Fig. 7.5.1.4 Writing Text

If you want to turn the TITLE *OFF*, you have to select DISPLAY OPTIONS and then select TITLE. A message will appear in the command window saying that the TITLE is now *OFF*.

7.5.2 HIDDEN LINES, SHADED IMAGES, LABELS AND ICONS

When you have mesh information, you can get a hidden-line view as follows:

1. Select DISPLAY OPTIONS - LABEL - ALL. Click *OFF*. This turns off all labels at the start.

2. Select DISPLAY OPTIONS - HIDDEN. Click *ON*

   or

   select MODE - WIRE MESH.

   Select CDRAW to get the hidden line view.

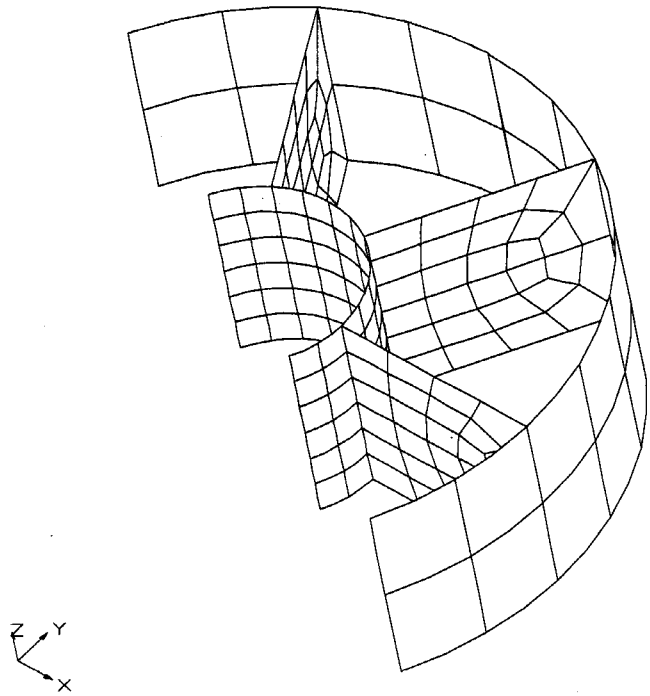

Fig. 7.5.2.1 Hidden Line View of a Model

To get a shaded image, select MODE - SHADED IMAGE and select CDRAW to get the display. To return to wire-mesh mode, select MODE - WIRE MESH.

If you want element labels at this stage, select DISPLAY OPTIONS - LABEL - ELEMENT and click *ON*.

Select CDRAW to display the model. Should you need to zoom now,

1. Select SET DIGITIZER and click *ON*.

2. Select VIEW OPTIONS - Select ZOOM. Detect the corners of the zoom-box on the screen.

To display element icons:

1. Select DISPLAY OPTIONS

2. Select ICONS and click *ON*.

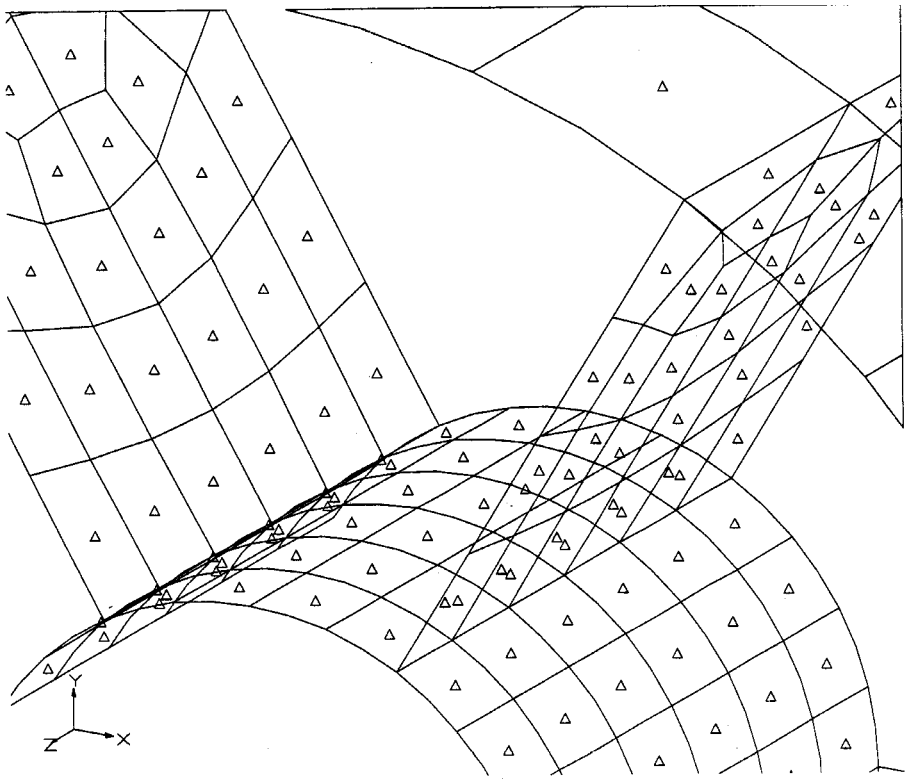

Fig. 7.5.2.2 Zoomed View with Icons *ON*

When you select icons *ON*, icons would be displayed for all the entities that are currently set *ON*. For the above view, we set all entities *OFF* except elements. Icons are always displayed at the c.g. (center of gravity) of the entity. These are especially helpful when you want to select a particular entity on the screen with the digitizer.

7.5.3 FRINGE PLOTS, CONTOUR PLOTS AND DEFORMED SHAPES

Once you have results in the database (either by reading the neutral file in the current session or bringing in a file where a neutral file was read in some previous session; i.e., a *.RES3* file exists), you can simply invoke the fringe plot as follows:

1. Select MODE and select FRINGE PLOT.
2. Select CDRAW.
3. When you are asked about pattern subdivision number, enter 1.

The default variable for which the fringe plot appears is the Von-Mises stress. You should also note that the fringe plot comes on the undeformed shape.

In order to get a contour plot on a rotated view:

1. Select VIEW OPTIONS-ROTATE and enter 0, -30 and again enter 20 (so that first you rotate about y-axis and then about x-axis) to get the desired view.
2. Select GLOB.VIEW UP to come back to the main menu.
3. Select MODE and select LINE CONTOUR.
4. Select CDRAW.
5. Enter N if you do not want contour labels over the model. For the following figure, we entered Y.

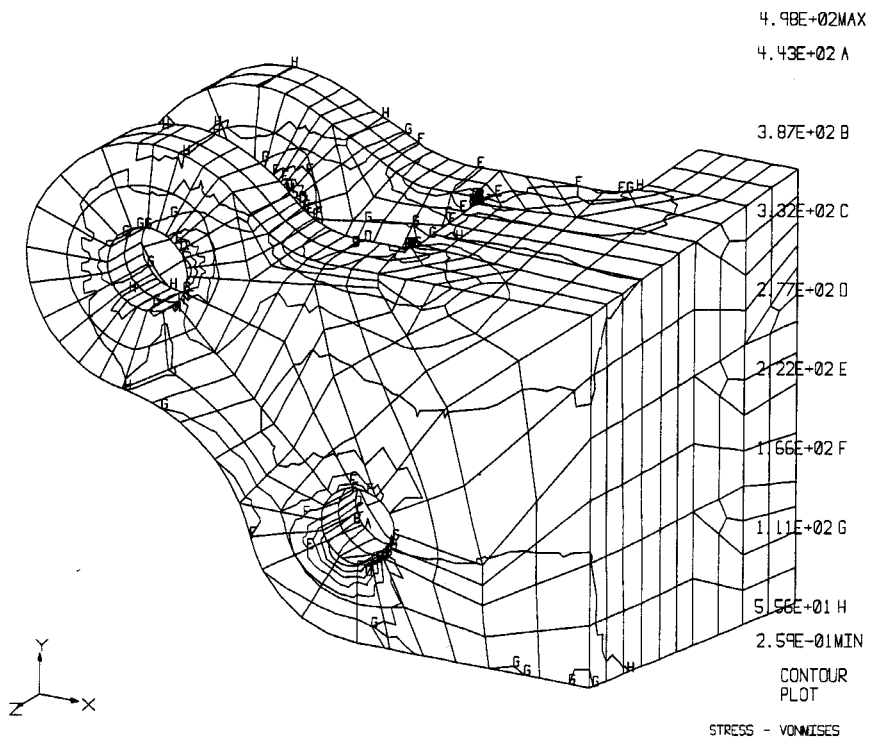

Figure 7.5.3.1 Contour Plot

As you may have observed, the contour plot is drawn on a hidden line view. In the event that you want to get a contour plot without hidden line,

1. Select DISPLAY OPTIONS-HIDDEN. Click OFF.

2. Give a CDRAW. Enter N for not displaying the labels.

For the purpose of our illustrations, we have turned the HIDDEN ON and continue.

In order to change the function from Von-Mises stress to displacement in the y-direction, observe the following procedure:

1. Go to the main menu from wherever you are.
2. Select POST RESULTS.
3. Select CONTOURS.
4. Select FUNCTION TYPE. Press ESC key to clear the prompt window. Enter D for displacement. Enter Y for y-direction
5. Select CDRAW and enter Y.

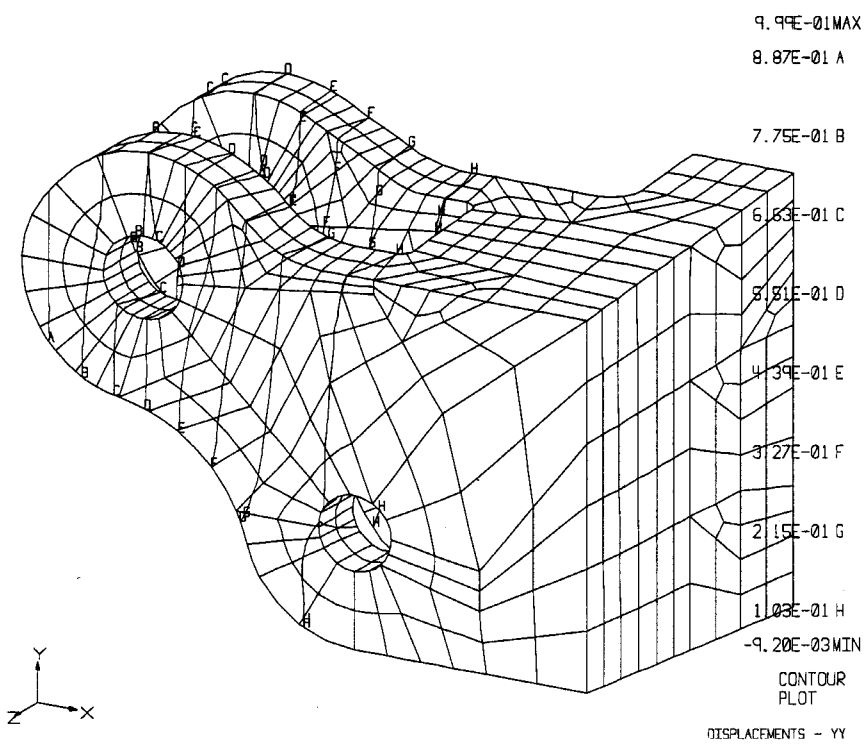

Fig. 7.5.3.2 Another Contour Plot

To get a contour plot on the deformed geometry,

1. Select POST.CONT UP to come to the POST RESULTS menu.

2. Select DEFORMED GEOMETRY. Click ON. Then click OK to confirm the default setting of MANUAL mode. Press ESC key to clear the prompt window and enter 100 (any suitable value) for the displacement scale factor.

3. Select CDRAW and enter Y to get the contour labels.

If you want a fringe plot of the same function on the deformed shape,

1. Select MODE.

2. Select FRINGE PLOT.

3. Select CDRAW and enter 1 for the number of PATTERN subdivisions.

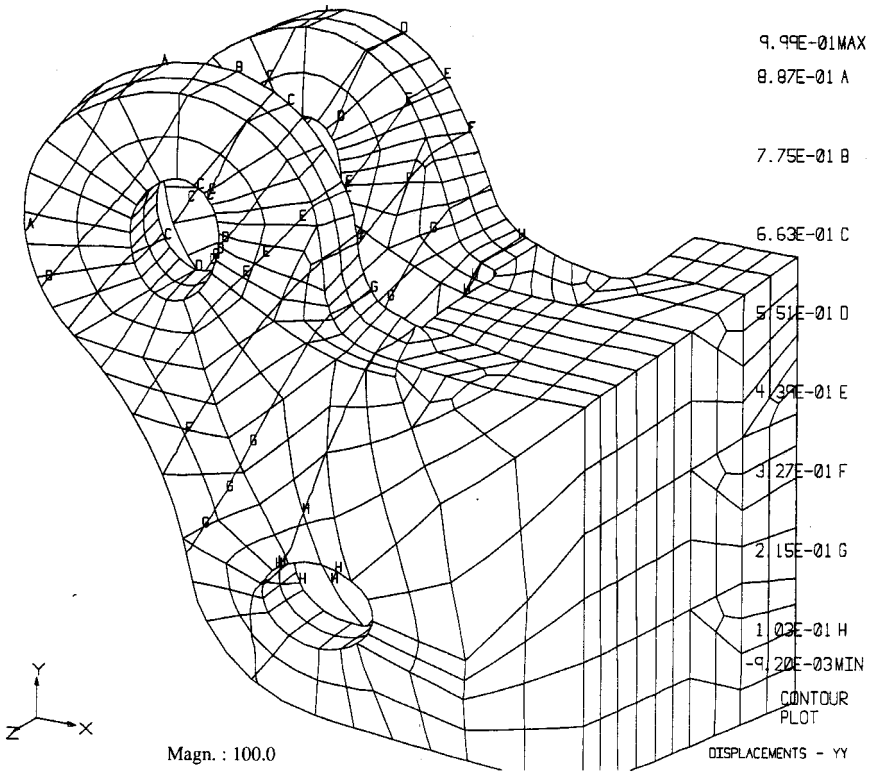

Fig. 7.5.3.3 Contour Plot on Deformed Configuration

If you want the deformed shape without any fringe or contour plot,

1. Select MODE.
2. Select WIRE MESH.
3. Enter Y to the prompt asking you about undeformed shape to be displayed.

You would then see the undeformed model in dashed lines; whereas the deformed shape would appear as solid lines.

To display contours or fringe plots over undeformed shape again,

1. Select DEFORMED GEOMETRY.
2. Click *OFF*.

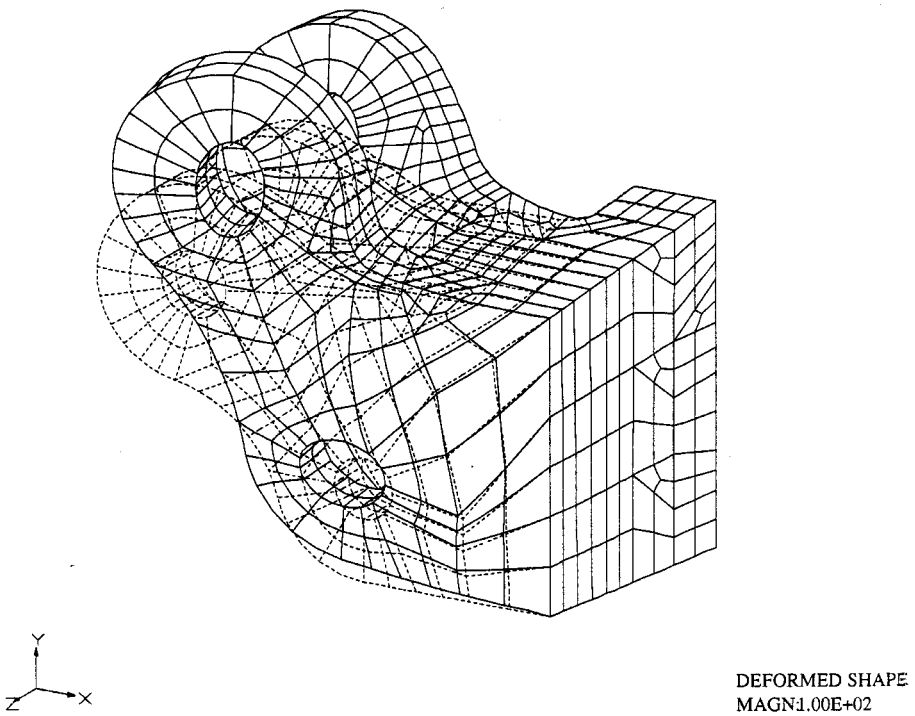

Fig. 7.5.3.4 Original and Deformed Configurations

Throughout the above selection, you can rotate the model or use the ZOOM/ PAN/ MAGNIFY (in which case you should select DRAW instead of CDRAW) commands under the VIEW OPTIONS menu.

7.5.4 CHANGING CONTOUR RANGE AND USING COLOR BAR

The system defaults show you contours or fringe plots spanning from the minimum to the maximum value of the function (default is the Von-Mises Stress) and uses 8 levels (alphabets or color bars) for the purpose. If you want to change the number of levels while you are working with contour plots,

1. Select POST RESULTS.
2. Select CONTOURS.
3. Select CONTOUR RANGE.
4. Click *OK* for AUTOMATIC mode. Press ESC to clear the prompt window and enter 12 for the number of contour levels.
5. Select CDRAW and enter *Y* to display contour labels.

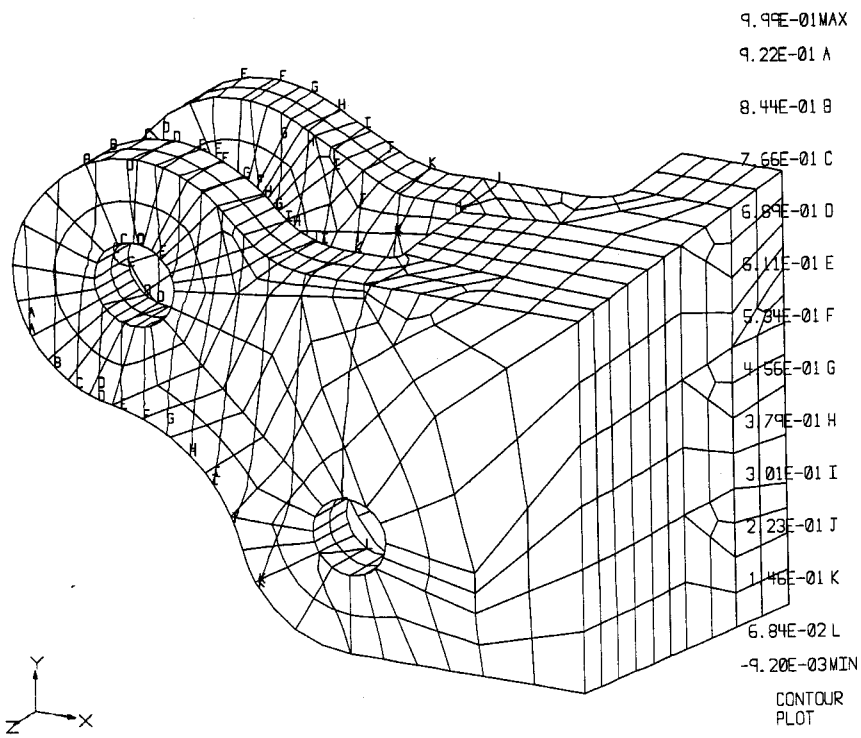

Fig. 7.5.4.1 Increasing Number of Contour Levels

If you want contours to be drawn over a specific range of values,

1. Select POST RESULTS - CONTOURS - CONTOUR RANGE.
2. The prompt window shows AUTOMATIC. Press ESC key to clear this. Enter *M* for MANUAL. Enter the lower and higher values defining your required range. Enter the number of contour levels.

3. Select CDRAW and enter Y to display the contour labels.

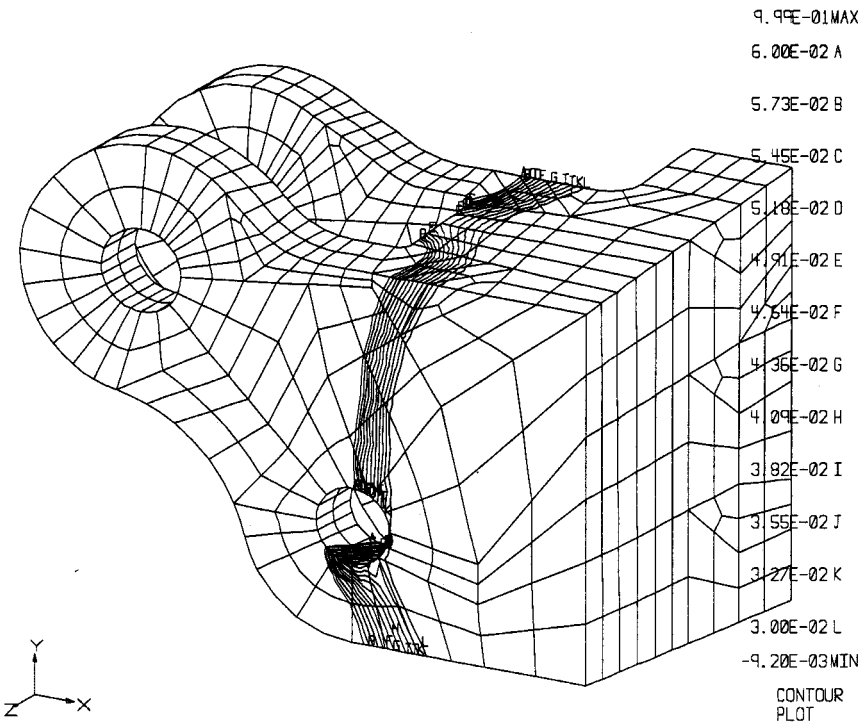

Fig. 7.5.4.2 Using Manual Contour Range

When you get the display of contour lines or fringe plot in color and you wish to change the color of the bar (or alphabet) representing a contour level,

1. Select POST RESULTS - DEFINE COLOR BAR.

2. Enter the color level number and the RGB values desired (the current levels and corresponding RGBs are shown by the system to help you).

3. Select CDRAW.

7.6 HELPFUL HINTS

Before bringing a model in BESTVIEW for further addition or alteration, it is always a good idea to keep a backup of the working model. In case you forget to take the backup and have already entered the BESTVIEW environment, use the SAVE command to save the working model under a unique backup file name. It is always recommended that you should SAVE the current model, preferably after every major addition or alteration. The latter SAVE operation may be performed many times with the same SAVE-*file.name* (i.e., overwrite the file every time). Thus, we suggest that you have a working model and a saved model at any given time during your BESTVIEW session (in the pre-processing stage). This will aid you considerably in the unlikely event of a system crash.

While deleting geometrical and mesh entities, always delete in the TOP⇒BOTTOM sequence of the entity-hierarchy. The geometrical hierarchy is as follows:

SURFACE

↓

LINE

↓

POINT

The mesh hierarchy is as follows:

ELEMENT

↓

NODE

For example, if you wish to delete a line, you should first delete all the surfaces (if any) associated with it and then delete the line. Similarly, to delete nodes, you would have to delete the associated elements first and then delete the nodes.

A GROUP is a defined cluster of entities. If you defined certain entities in a group and later deleted some of these entities, they are not automatically get deleted from the GROUP. You have to manually make the GROUP (containing the deleted entities) current, and remove the relevant entities from that GROUP (use the GROUP-CURRENT, GROUP-DELETE options).

If you want to *move* a point or a node, simply use the POINT-ENTER option or the NODE-CREATE-COORDINATE option and define the same point or node number (to be removed) but with the altered coordinates. Turn the digitizer OFF before doing this, if possible.

There may be a few odd instances when certain combinations of operations in the pre-processing stage might cause the software to crash. In such a situation, delete the *junk* files that are generated for internal use and start again with the saved copy of the model. Be more careful with regard to the operation you perform now, and if possible, save the model more frequently. Hopefully, if you follow the commands outlined in this manual in the proper manner, you should not have any difficulties at all.

One of the most frequently used options during the model building process is the LINE-BREAK option. It is a good idea to always delete the parent line (being broken) after using this option. This avoids confusion later on. The BREAK option cannot be used on merged lines or splines. You can always merge different line segments through the LINE-MERGE option. But, while picking this merged line from the display (for patch definition or mesh generation), you should make sure that you choose the correct line and not one of the individual segments. Likewise, you should note that a spline generated through the LINE-SPLINE option is actually a merged line. If you delete the spline without deleting the lines merged with it, you will get the component segments. This is sometimes useful, as we discussed in the LINE-FILLET option.

If you are creating a multi-GMR model for GPBEST, we strongly recommend that you create each GMR (or GROUP) in a different session and finally merge all the GMRs into the complete model using the DEFINE GEOMETRY - ASSEMBLE MODELS option. In this way, it will be possible to create models with the minimum of mistakes, and any error would be localized to a GROUP without spoiling the complete model. It is then easier to amend the specific GROUP and reassemble all the GROUPs to form the final model. Obviously, manipulating and editing model components is much easier and more convenient than dealing with the whole model. From the point of view of BESTVIEW, this is less error-prone and more conducive to creating an accurate data file for GPBEST. Even if you bring multi-group information from other CAD/CAM software, through the IGES utility, segregating each group (along with the entities associated) into independent model files will help you to produce the complete model in a very systematic and efficient manner. Moreover, any changes later on will be easily dealt with by using this technique.

As to the meshing operations, it is usually most convenient to create a compatible set of patches (surfaces) for each GMR. It is then possible to mesh them using the FAST-MESH command. Each of the saved GMR geometries and meshes can be then assembled using the ASSEMBLE command.

Options like rotate, zoom, pan, magnify would require a recalculation of nodal screen coordinates as well as hidden-line information. To maximize the speed of display, look at relevant parameters (like stress, displacement, etc.) for fringe and contour plots while keeping the same view. Then turn the MODE to WIRE MESH and rotate to another view. Now change MODE back to FRINGE PLOT or CONTOUR and redisplay the model.

8.0 A TUTORIAL ON BESTVIEW

8.1 PROBLEM #1

DESCRIPTION: This is a very simple example which takes you through each of the steps involved in a boundary element analysis. Although it is a simple problem, it highlights many of the steps that are needed to analyze more complex problems. Among the steps covered are: 1) opening up a BESTVIEW database, 2) defining basic geometry in terms of POINTs and SURFACEs, 3) generating a boundary element mesh and the associated analysis data file for GPBEST, 4) running a GPBEST analysis, and 5) displaying the results in terms of deformation and stress plots. The remaining problems in this chapter are more detailed.

Problem Specification

The beam of uniform cross-section is shown in the figure below. It is completely fixed at the wall, and is free to move at the free end (tip). A static force of 200 units acts in the lengthwise (+X) direction at the tip. The object is to determine the stress and deformation states of the beam under the given load.

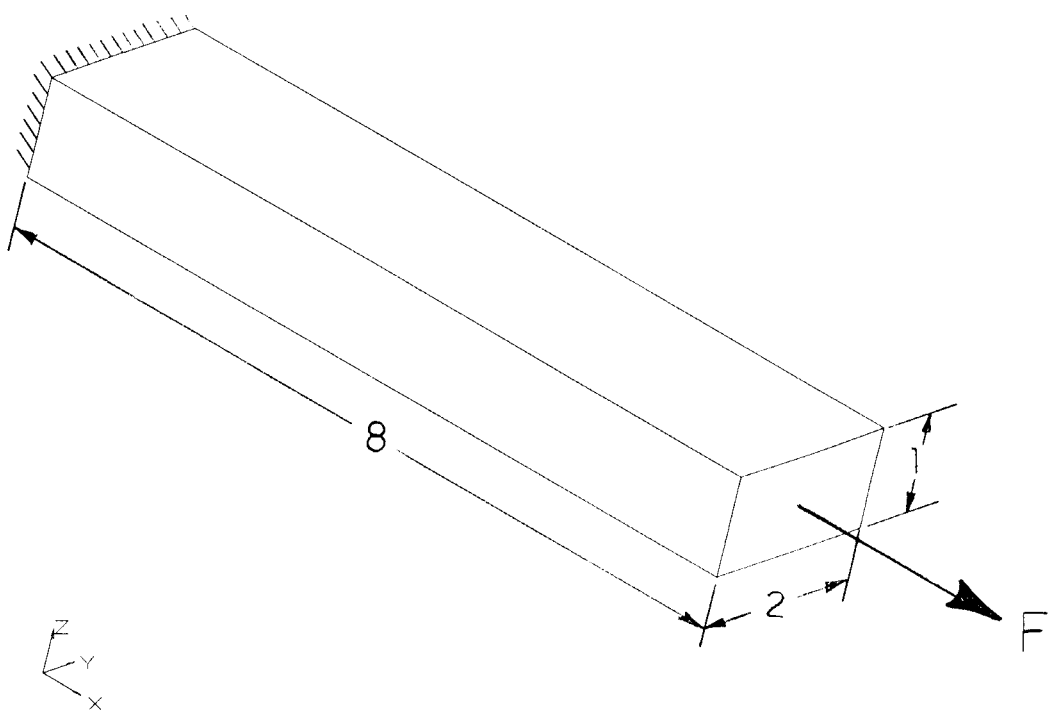

Fig. 8.1.1 Geometry for the Beam in Tension

INPUT FOCUS	*COMMAND/DATA ENTRY*	*COMMENTS*
Start BESTVIEW and specify a name for the database:		
[UNIX]	bestview	Start BESTVIEW.
[PROMPT]	<ESC> example1[OK]	Name of database.
[MENU]	SET-DIGITIZER	Turn DIGITIZER mode OFF.
[PROMPT]	[OFF]	

INPUT FOCUS	*COMMAND/DATA ENTRY*	*COMMENTS*
Define the eight corner points of the beam:		
[MENU]	DEFINE-GEOMETRY	
[MENU]	POINT	
[MENU]	ENTER	
[PROMPT]	<ESC> 1 [OK]	First POINT number is 1.
[PROMPT]	0,0,0 <CR>	Point 1.
[PROMPT]	0,2,0 <CR>	Point 2.
[PROMPT]	0,2,1 <CR>	Point 3.
[PROMPT]	0,0,1 <CR>	Point 4.
[PROMPT]	8,0,0 <CR>	Point 5.
[PROMPT]	8,2,0 <CR>	Point 6.
[PROMPT]	8,2,1 <CR>	Point 7.
[PROMPT]	8,0,1 <CR>	Point 8.
[PROMPT]	<ESC>	
[MENU]	DEFI.POIN UP	Move up one menu.
Rotate the model for a better view angle:		
[MENU]	VIEW-OPTIONS	
[MENU]	ROTATE	
[PROMPT]	-60,-30,-30 [OK] [OK]	Rotate about screen x, y, z axes to obtain an isometric view.
[MENU]	CDRAW	At this point, the [DISPLAY] window should appear as shown in the following figure.
[MENU]	GLOB.VIEW UP	Move up one menu.

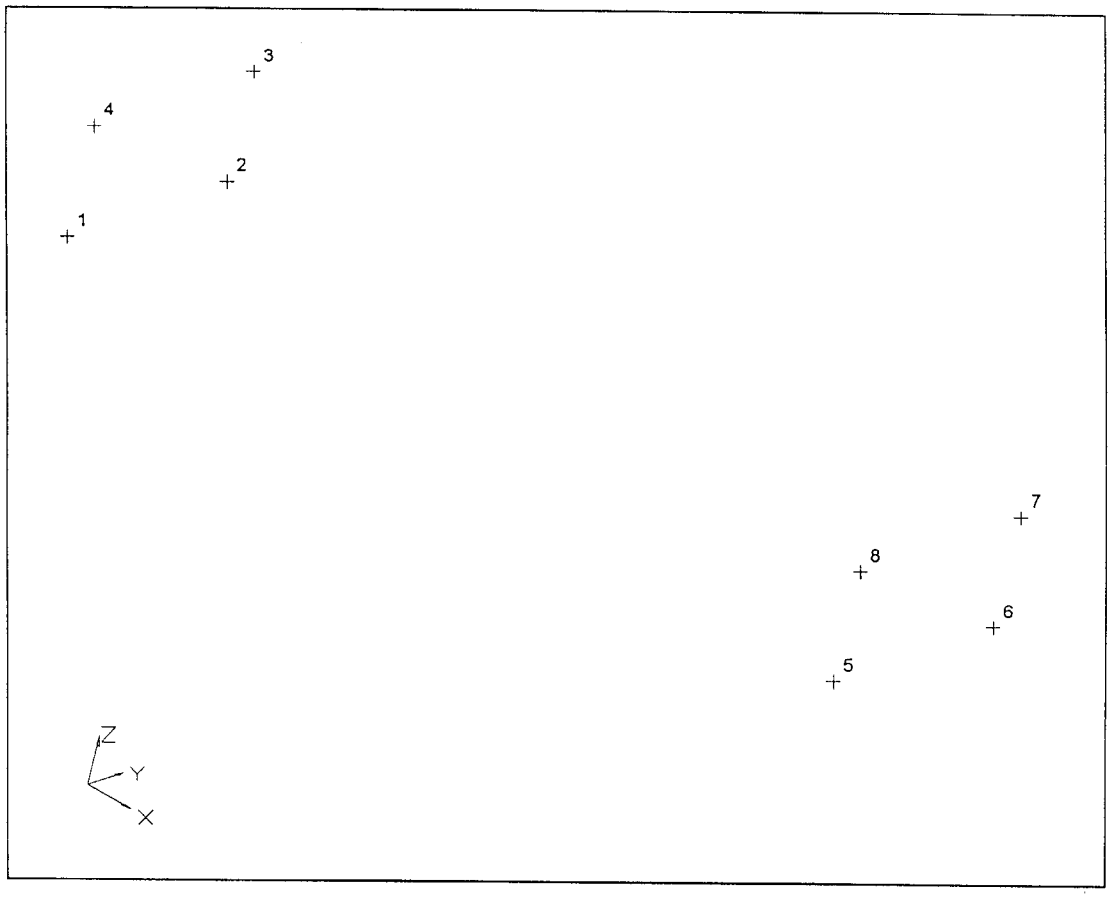

Fig. 8.1.2 Corner Points

INPUT FOCUS	*COMMAND/DATA ENTRY*		*COMMENTS*
Using the 8 corner points, define 6 surfaces, one for each face of the beam:			
[MENU]	SURFACE		Still in the DEFI menu.
[MENU]	ENTER		
[PROMPT]	<ESC> 1 [OK]		First SURFACE number is 1.
[PROMPT]	1,2,3,4 <CR>		Surface 1, at the ‘‘wall.’’
[PROMPT]	5,6,7,8 <CR>		Surface 2, at the free end of the beam.
[PROMPT]	1,5,6,2 <CR>		Surface 3.
[PROMPT]	4,8,7,3 <CR>		Surface 4.
[PROMPT]	1,5,8,4 <CR>		Surface 5.
[PROMPT]	2,6,7,3 <CR>		Surface 6.
[PROMPT]	<ESC>		
[MENU]	DEFI.SURF	UP	Move up one menu.
[MENU]	DEFI	UP	Move up one menu.

INPUT FOCUS	*COMMAND/DATA ENTRY*	*COMMENTS*

Since all the geometry has been defined (POINTS and SURFACES), the surfaces can be placed in a GROUP, g01. This will be useful for generating the GPBEST data file:

[MENU]	GROUPS	
[MENU]	ADD ENTITY	
[PROMPT]	g01	Name of new GROUP.
[MENU]	SURFACE	
[PROMPT]	<ESC> 1,6 [OK]	
[PROMPT]	YES	Save changes.
[PROMPT]	<ESC> MAGENTA [OK]	Color of GROUP.
[MENU]	GLOB.GROU UP	Move up one menu.

Generate a mesh of nodes and surface elements. For Simplicity, there will only be one element on each face of the beam:

[MENU]	GENERATE MESH	
[MENU]	FAST-MESH	
[ROOT]	.005 <CR>	A message appears in the [ROOT] window to ‘‘Give search radius:’’.
[ROOT]	1 <CR>	A message appears in the [ROOT] window to ‘‘Give mesh density <n>:’’. Specify only one element in each patch direction. Move up one menu.
[MENU]	GENE UP	

Display only the nodes and elements. Turn off the display of points and surfaces, since they are no longer needed.

[MENU]	DISPLAY-OPTIONS	
[MENU]	ENTITY	
[MENU]	ALL	
[PROMPT]	[OFF]	Turn everything OFF.
[MENU]	MESH	
[PROMPT]	[ON]	Turn only MESH items ON (NODES and ELEMENTS).
[MENU]	GLOB.DISP.ENT UP	Move up one menu.
[MENU]	GLOB.DISP UP	Move up one menu.
[MENU]	CDRAW	At this point the [DISPLAY] window should appear as shown in the following figure.

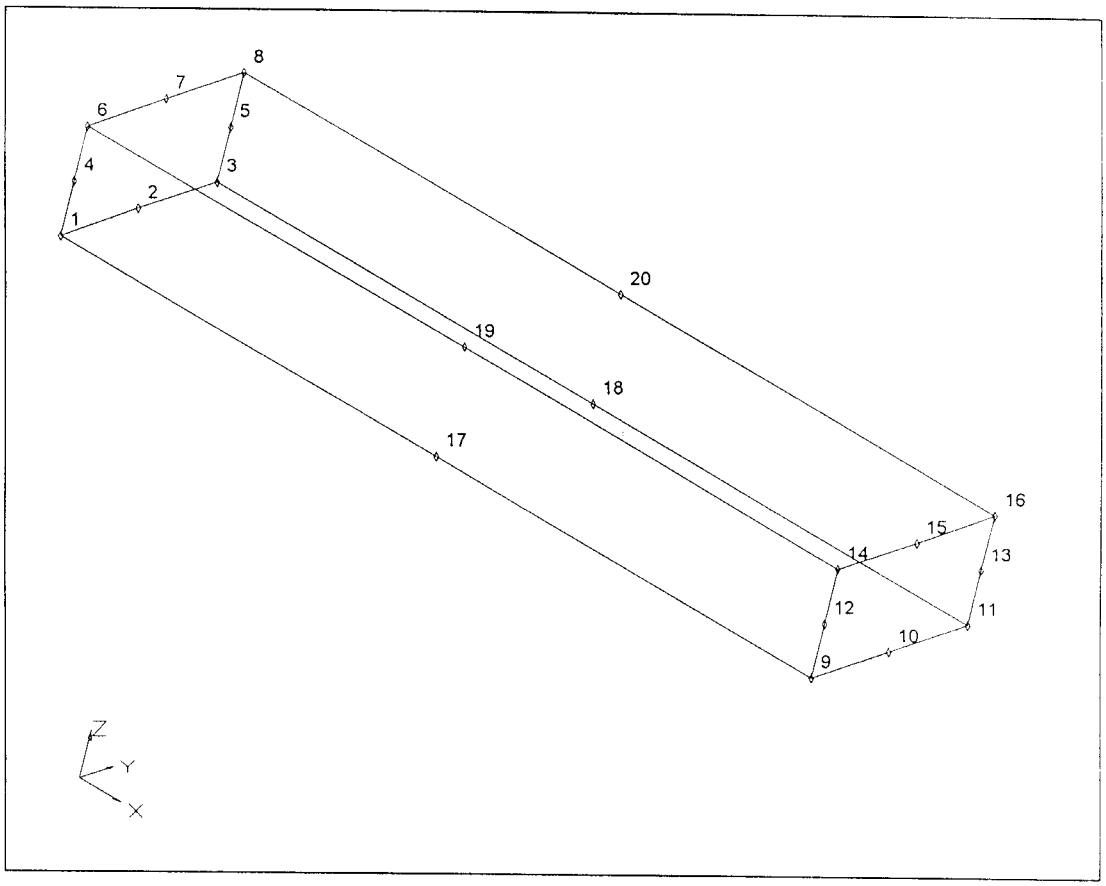

Fig. 8.1.3 Model Mesh Display

INPUT FOCUS	*COMMAND/DATA ENTRY*	*COMMENTS*

The boundary element model has been defined in terms of nodes and elements. Proceed to prepare the GPBEST data file:

[MENU]	PREPARE-ANALYSIS	
[ROOT]	<CR>	Press <CR> to continue with "Prepare Analysis."
[MENU]	CASE	
[MENU]	DEFAULTS	Accept default values for **CASE.
[MENU]	MATERIAL	
[MENU]	DEFAULTS	Accept default values for **MATE.
[MENU]	GMR	
[ROOT]	0 <CR>	Reference temperature $T = 0$
[MENU]	NEXT GMR	End of the only GMR in the model.
[PROMPT]	[NO]	No Reference points to define.

INPUT FOCUS	*COMMAND/DATA ENTRY*	*COMMENTS*
Define the boundary conditions for the model. The wall is completely fixed:		
[MENU]	BCSET	
[ROOT]	WALL <CR>	Name of boundary condition set.
[ROOT]	G <CR>	Global value.
[ROOT]	S <CR>	Selected elements.
[PROMPT]	[NO]	Don't use digitizer to pick elements.
[PROMPT]	[NO]	Don't turn HIDDEN ON.
[PROMPT]	Add [OK]	
[ROOT]	1 <CR>	Element 1.
[ROOT]	. <CR>	Period (end input).
[ROOT]	C <CR>	In [DISPLAY] window, element 1 is highlighted.
[ROOT]	A <CR>	All nodes on element 1.
[ROOT]	N <CR>	No time variation.
[ROOT]	D <CR>	Displacement.
[ROOT]	1 <CR>	X-direction.
[ROOT]	0 <CR>	Zero magnitude.
[ROOT]	C <CR>	Confirm.
[ROOT]	Y <CR>	More boundary conditions.
[ROOT]	G <CR>	
[ROOT]	N <CR>	No time variation.
[ROOT]	D <CR>	Displacement.
[ROOT]	2 <CR>	Y-direction.
[ROOT]	0 <CR>	Zero magnitude.
[ROOT]	C <CR>	Confirm.
[ROOT]	Y <CR>	More boundary conditions.
[ROOT]	G <CR>	
[ROOT]	N <CR>	No time variation.
[ROOT]	D <CR>	Displacement.
[ROOT]	3 <CR>	Z-direction.
[ROOT]	0 <CR>	Zero magnitude.
[ROOT]	C <CR>	Confirm.
[ROOT]	N <CR>	Stop this boundary condition.

INPUT FOCUS	*COMMAND/DATA ENTRY*	*COMMENTS*

Define the boundary condition for the free edge (tip). There is a total force of 200 units acting at the tip:

[MENU]	BCSET	
[ROOT]	TIP <CR>	Name of boundary condition set.
[ROOT]	G <CR>	Global value.
[ROOT]	S <CR>	Selected elements.
[PROMPT]	[NO]	Don't use digitizer to pick elements.
[PROMPT]	[NO]	Don't turn HIDDEN ON.
[PROMPT]	Add [OK]	
[ROOT]	2 <CR>	Element 2.
[ROOT]	. <CR>	Period (end input).
[ROOT]	C <CR>	In [DISPLAY] window, element 2 is highlighted.
[ROOT]	A <CR>	All nodes on element 2.
[ROOT]	N <CR>	No time variation.
[ROOT]	T <CR>	Traction.
[ROOT]	1 <CR>	X-direction.
[ROOT]	100 <CR>	Magnitude. Note that this is a force per unit area. The dimensions of the tip are 1×2. Therefore, $2 \times 100 = 200$.
[ROOT]	C <CR>	Confirm.
[ROOT]	N <CR>	No other boundary conditions.
[MENU]	PREP UP	Move up one menu.
[MENU]	EXIT	
[PROMPT]	[YES]	Save this database.
[PROMPT]	[YES]	Exit BESTVIEW now.

At this point, the GPBEST data file has been written. Its name is example1.DAT, and is listed below. Proceed to run the analysis. After it is done, rename the neutral file:

[UNIX]	< example1.DAT best-s > example1.res <CR>
[UNIX]	mv NEUTRAL.OUT example1.neu

The file example1.DAT as created by PREPARE ANALYSIS option.
(This data file would be used to run in GPBEST.)

```
**CASE
TITLE  DEFAULT  TITLE
ELASTIC
TIME  1.0
ECHO
NEUTRAL

**MATE
ID   mat1
TEMP  0.0
EMOD  30000
DENS  1.0
POIS  0.3

**GMR
ID g01
MATE  mat1
TREF    0.
TINT    0.
POIN
    1     0.000000E+00     0.000000E+00     0.000000E+00
    2     0.000000E+00     0.100000E+01     0.000000E+00
    3     0.000000E+00     0.200000E+01     0.000000E+00
    4     0.000000E+00     0.000000E+00     0.500000E+00
    5     0.000000E+00     0.200000E+01     0.500000E+00
    6     0.000000E+00     0.000000E+00     0.100000E+01
    7     0.000000E+00     0.100000E+01     0.100000E+01
    8     0.000000E+00     0.200000E+01     0.100000E+01
    9     0.800000E+01     0.000000E+00     0.000000E+00
   10     0.800000E+01     0.100000E+01     0.000000E+00
   11     0.800000E+01     0.200000E+01     0.000000E+00
   12     0.800000E+01     0.000000E+00     0.500000E+00
   13     0.800000E+01     0.200000E+01     0.500000E+00
   14     0.800000E+01     0.000000E+00     0.100000E+01
   15     0.800000E+01     0.100000E+01     0.100000E+01
   16     0.800000E+01     0.200000E+01     0.100000E+01
   17     0.400000E+01     0.000000E+00     0.000000E+00
   18     0.400000E+01     0.200000E+01     0.000000E+00
   19     0.400000E+01     0.000000E+00     0.100000E+01
   20     0.400000E+01     0.200000E+01     0.100000E+01
SURF g01
TYPE QUAD SERE
ELEM
     1     1     4     6     7     8     5     3     2
     2     9    10    11    13    16    15    14    12
     3     1     2     3    18    11    10     9    17
     4     6    19    14    15    16    20     8     7
     5     1    17     9    12    14    19     6     4
     6     3     5     8    20    16    13    11    18
NORM   1  +
```

```
**BCSET
ID WALL
VALUE
GMR g01
SURF g01
ELEM     1
DISP     1
SPLIST ALL
T  1    0.
DISP     2
SPLIST ALL
T  1    0.
DISP     3
SPLIST ALL
T  1    0.

**BCSET
ID TIP
VALUE
GMR g01
SURF g01
ELEM     2
TRAC     1
SPLIST ALL
T  1     100.0000
```

INPUT FOCUS	*COMMAND/DATA ENTRY*	*COMMENTS*
If the job runs successfully in GPBEST, you can proceed to view the results in BESTVIEW.		
[UNIX]	bestview	Start BESTVIEW.
[PROMPT]	<ESC> example1[OK]	Specify a new name for the database.
[MENU]	POST-RESULTS	
[MENU]	READ-GPBEST.RES.	Read in NEUTRAL file.
[ROOT]	example1.neu	Specify name of NEUTRAL file from GPBEST run.
[MENU]	CDRAW	
[MENU]	VIEW-OPTIONS	Rotate the model to obtain an isometric view.
[MENU]	ROTATE	
[PROMPT]	-60,-30,-30 [OK] [OK]	
[MENU]	CDRAW	
[MENU]	GLOB.VIEW UP	Move up one menu.

INPUT FOCUS	*COMMAND/DATA ENTRY*	*COMMENTS*
Proceed to display a plot of the deformed beam, along with the original (undeformed) geometry:		
[MENU]	DEFORMED-GEOMETRY	Still in the POST-Results menu.
[PROMPT]	[ON]	Turn deformed plot ON.
[PROMPT]	MANUAL [OK]	
[PROMPT]	<ESC> 50 [OK]	Specify scale factor of 50.
[MENU]	CDRAW	
[PROMPT]	[YES]	Display both undeformed and deformed geometry. At this point, the [DISPLAY] window appears as shown in the following figure.

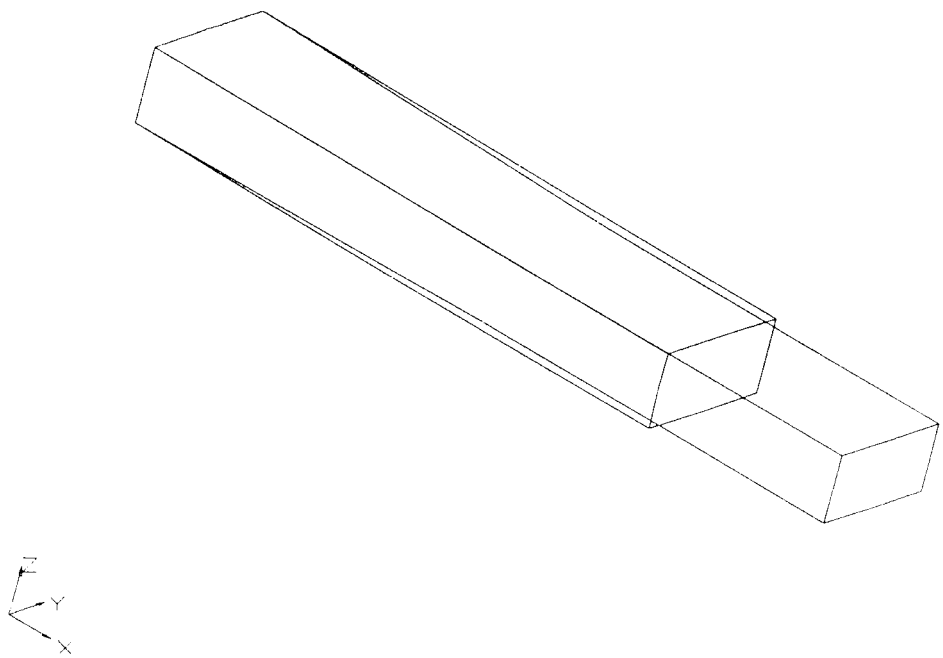

Fig. 8.1.4 Deformed Geometry Plot

INPUT FOCUS	*COMMAND/DATA ENTRY*	*COMMENTS*
Proceed to display a stress fringe plot:		
[MENU]	MODE	
[MENU]	FRINGE-PLOT	
[MENU]	CDRAW	The Von Mises stress is displayed on a fringe plot

8.2 PROBLEM #2

DESCRIPTION: A cantilever beam is shown in the following figure. It is modeled as a 2-D problem. It is fixed at the wall and is free to move at the free end (tip). A static force of 2000 N acts in the outward $(+X)$ direction at the tip. The object is to determine the stress and deformation state of the beam under the given load.

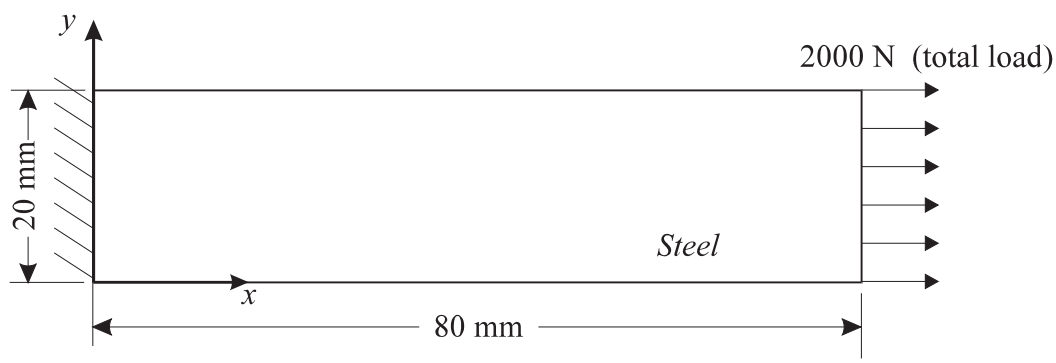

Fig. 8.2.1 Geometry for the 2-D Beam in Tension

INPUT FOCUS	*COMMAND/DATA ENTRY*	*COMMENTS*
In this step, you will start the BESTVIEW program and name the database you will be working on.		
[ROOT]	bestview	Start BESTVIEW.
[PROMPT]	<ESC> example2[OK]	Name of new database.
[MENU]	SET DIGITIZER	Turn DIGITIZER mode OFF.
[PROMPT]	[OFF]	

INPUT FOCUS	*COMMAND/DATA ENTRY*	*COMMENTS*
The geometry of the beam is defined by four corner points and four lines defining the edge of the beam. These are merely geometry and have nothing to do with the nodes and elements. However, the points and lines will be used to construct a boundary element mesh in subsequent steps.		
[MENU]	DEFINE-GEOMETRY	
[MENU]	POINT	

[MENU]	ENTER		
[PROMPT]	<ESC> 1 [OK]		First POINT number is 1.
[PROMPT]	0,0,0 <CR>		Point 1.
[PROMPT]	80,0,0 <CR>		Point 2 (Length is 80 mm).
[PROMPT]	80,20,0 <CR>		Point 3 (Height is 20 mm).
[PROMPT]	0,20,0 <CR>		Point 4.
[PROMPT]	<ESC>		
[MENU]	DEFI.POIN	UP	Move up one menu.
[MENU]	CDRAW		At this point, the [DISPLAY] window should appear as shown in the following figure.

Fig. 8.2.2 Geometric Points Defining the Corners of the Beam

INPUT FOCUS	*COMMAND/DATA ENTRY*	*COMMENTS*

The four points defined in the previous step can be used to construct geometrical lines. The lines are defined using the 2-point options.

These lines are not boundary elements. They are merely geometrical entities which will be used to create boundary elements later.

[MENU]	LINE	
[MENU]	ENTER	
[PROMPT]	<ESC> 1 [OK]	First LINE number is 1.

[PROMPT]	1,2 <CR>		Line 1 appears in [DISPLAY] window.
[PROMPT]	2,3 <CR>		Line 2.
[PROMPT]	3,4 <CR>		Line 3.
[PROMPT]	4,1 <CR>		Line 4.
[PROMPT]	<ESC>		End input. The [DISPLAY] window should appear as in the figure below.
[MENU]	DEFI.LINE	UP	Move up one menu.
[MENU]	DEFI	UP	Move up one menu.

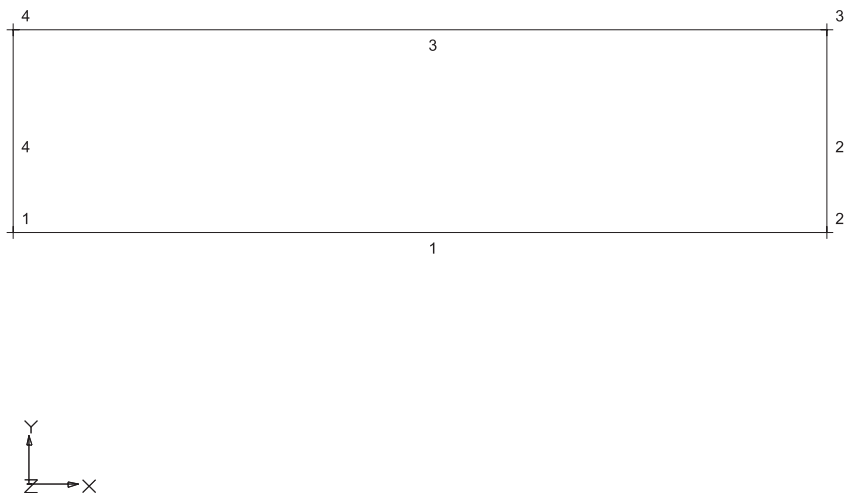

Fig. 8.2.3 Geometric Points and Lines

INPUT FOCUS	*COMMAND/DATA ENTRY*	*COMMENTS*

Groups are useful for meshing purposes. After the four lines are placed in a group, the group can be used to create a boundary element mesh.

Groups are also useful for defining multiple-region models. Groups in BESTVIEW correspond to GMRs in GPBEST.

[MENU]	GROUPS	
[MENU]	ADD ENTITY	
[PROMPT]	beam1 [OK]	Name of GMR.
[MENU]	LINE	

[PROMPT]	<ESC> 1,4 [OK]		
[PROMPT]	YES		Save current changes.
[PROMPT]	<ESC> MAGENTA [OK]		Color of group. Color choices are displayed in the [ROOT] window.
[MENU]	GLOB.GROU	UP	Move up one menu.

INPUT FOCUS	*COMMAND/DATA ENTRY*	*COMMENTS*

The group, `beam1`*, created in the previous step, is now used to generate the boundary element mesh. The boundary element mesh consists of boundary elements and nodes. Only one boundary element will be created on each edge of the beam. Each boundary element will contain three nodes (two end nodes and one mid node), hence, it is called a Quadratic element. Note that equivalencing of nodes is unnecessary. BESTVIEW takes care of this detail automatically.*

Note that an interior mesh is not needed; a mesh is only required on the boundary of the region. This is a tremendous modeling advantage inherent in the boundary element method.

[MENU]	GENERATE MESH		
[MENU]	FAST-MESH		
[ROOT]	0.005 <CR>		A message appears in the [ROOT] window to ‘‘Give search radius.’’
[ROOT]	1 <CR>		A message appears in the [ROOT] window to ‘‘Give mesh density for patches $< n >$.’’ Specify only one element in each direction.
[MENU]	GENE	UP	Move up one menu. The mesh has been created.

INPUT FOCUS	*COMMAND/DATA ENTRY*	*COMMENTS*

At this point, it is useful to learn how to manipulate the display in BESTVIEW. In this step, specific entities will be selected to be displayed. The point and line display will be turned off since these entities are no longer needed. The plot of the element numbers and node numbers will be useful.

[MENU]	DISPLAY-OPTIONS		
[MENU]	ENTITY		
[MENU]	ALL		
[PROMPT]	[OFF]		Turn everything OFF.
[MENU]	MESH		
[PROMPT]	[ON]		Turn only MESH items ON (NODES and ELEMENTS).
[MENU]	GLOB.DISP.ENTI	UP	Move up one menu.
[MENU]	LABEL		
[MENU]	MESH		
[PROMPT]	OFF		

[MENU]	ELEMENT		
[MENU]	ON		
[MENU]	CDRAW		See [DISPLAY] window in figure below. Only element numbers are displayed.
[MENU]	ALL		
[MENU]	OFF		
[MENU]	NODE		
[PROMPT]	ON		
[MENU]	CDRAW		See [DISPLAY] window in figure below. Only node numbers are displayed.
[MENU]	GLOB.DISP.LABE	UP	Move up one menu.
[MENU]	GLOB.DISP.	UP	Move up one menu.

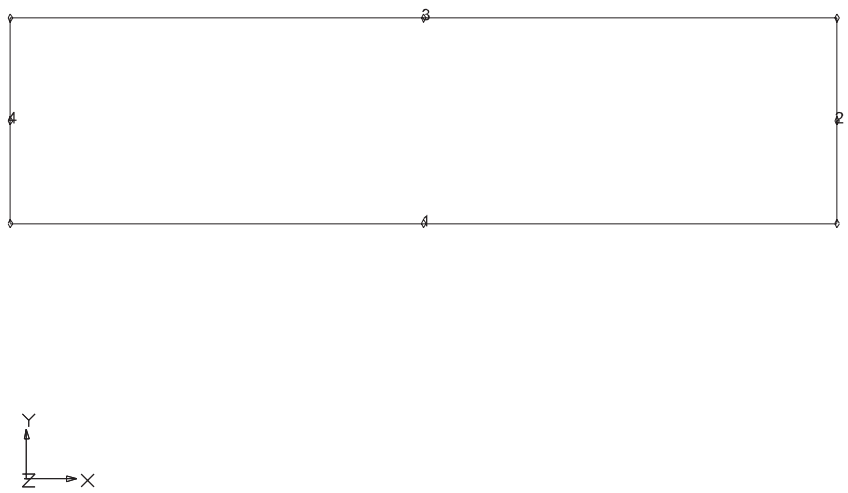

Fig. 8.2.4 Element Numbers

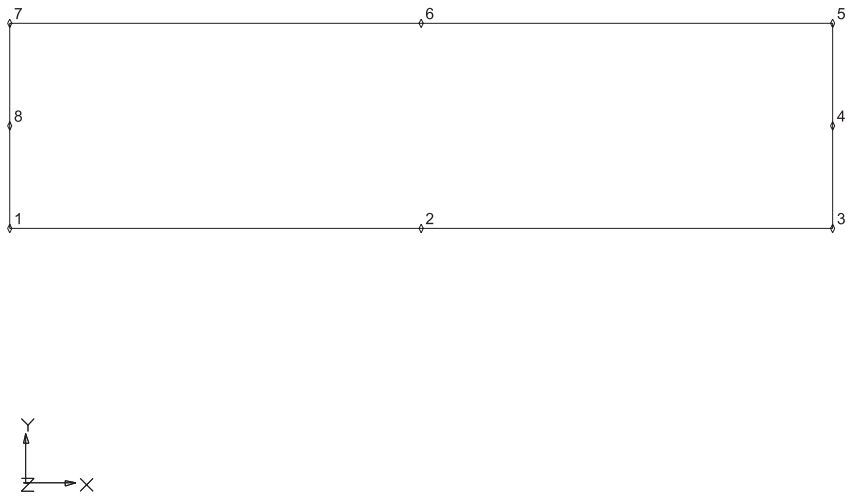

Fig. 8.2.5 Node Numbers

INPUT FOCUS	*COMMAND/DATA ENTRY*	*COMMENTS*

The boundary element model has been defined in terms of nodes and elements. Proceed to prepare the GPBEST data file.

[MENU]	PREPARE-ANALYSIS	
[ROOT]	<CR>	Press <CR> to continue with "Prepare Analysis."
[MENU]	CASE	
[MENU]	TITLE	
[ROOT]	SIMPLE BEAM <CR>	
[MENU]	DIMENSION	
[MENU]	2. PSTS : PLANE STRESS	
[MENU]	1. NONE	No symmetry.
[MENU]	PREP.CASE.DIME UP	
[MENU]	ANALYSIS TYPE	
[MENU]	ELASTIC	
[MENU]	PREP.CASE.ANAL UP	
[MENU]	PREP.CASE UP	**CASE input has been completed.

INPUT FOCUS	*COMMAND/DATA ENTRY*	*COMMENTS*
[MENU]	MATERIAL	Define material parameters.
[MENU]	DEFINE	
[ROOT]	STEEL <CR>	Name of the beam material.
[ROOT]	I <CR>	Isotropic.
[ROOT]	0 <CR>	Temperature T=0.
[ROOT]	207000.0 <CR>	Young's Modulus $(\frac{N}{mm^2})$.
[MENU]	0.3 <CR>	Poisson's Ratio.
[ROOT]	7.833E-9 <CR>	Mass density of Steel $\left(\frac{Ns^2}{mm^4}\right)$. Notice that units are chosen that are consistent with dimensions of the model which were mm.
[MENU]	PREP.MATE UP	Move up one menu. **MATE input has been completed.

INPUT FOCUS	*COMMAND/DATA ENTRY*	*COMMENTS*
[MENU]	GMR	
[MENU]	NO	Not an axisymmetric model.
[ROOT]	1 <CR>	Thickness.
[ROOT]	0 <CR>	Reference temperature $T = 0$.
[MENU]	NEXT GMR	End of only GMR in the model. **GMR input has been completed.
[PROMPT]	[NO]	No reference points to be defined. **GMR input has been completed.

INPUT FOCUS	*COMMAND/DATA ENTRY*	*COMMENTS*

While in PREPARE DATA*, the boundary conditions must be specified. There are two boundary conditions for this model. First, the wall is completely fixed. This requires constraining the X and Y degrees of freedom on element 4.*

Also, there is a distributed load on the right edge of the beam. The total load there is 2000 N. However, it is specified as a traction (distributed load) in GPBEST. Typically, loads in GPBEST are specified as distributed loads, or tractions.

[MENU]	BCSET	
[ROOT]	WALL <CR>	Name of boundary condition set. Fix the displacements at the left edge of the beam.
[ROOT]	G <CR>	Global value.
[ROOT]	S <CR>	Selected elements.
[PROMPT]	[NO]	Do not use digitizer to select.
[PROMPT]	<ESC> A <CR>	Add entities.

[ROOT]	4 <CR>	Element 4.
[ROOT]	. <CR>	Period (end input).
[ROOT]	C <CR>	In [DISPLAY] window, element 4 is highlighted. Confirm that this is correct.
[ROOT]	A <CR>	All nodes on element 4.
[ROOT]	N <CR>	No time variation.
[ROOT]	D <CR>	Displacement.
[ROOT]	1 <CR>	Constrain X-direction.
[ROOT]	0 <CR>	Zero magnitude.
[ROOT]	C <CR>	Confirm.
[ROOT]	Y <CR>	Proceed to constrain Y-direction.
[ROOT]	G <CR>	Global value.
[ROOT]	N <CR>	No time variation.
[ROOT]	D <CR>	Displacement.
[ROOT]	2 <CR>	Constrain Y-direction.
[ROOT]	0 <CR>	Zero magnitude.
[ROOT]	C <CR>	Confirm.
[ROOT]	N <CR>	No more BCs in WALL BCSET.

INPUT FOCUS	*COMMAND/DATA ENTRY*	*COMMENTS*
[MENU]	BCSET	Proceed to define the distributed load (traction) at the right edge.
[ROOT]	TIP <CR>	Name of boundary condition set.
[ROOT]	G <CR>	Global value.
[ROOT]	S <CR>	Selected elements.
[PROMPT]	[NO]	No digitizer.
[PROMPT]	<ESC> A <CR>	Add entities.
[ROOT]	2 <CR>	Element 2.
[ROOT]	. <CR>	Period.
[ROOT]	C <CR>	In [DISPLAY] window, element 2 is highlighted.
[ROOT]	A <CR>	All nodes on element 2.
[ROOT]	N <CR>	No time variation.
[ROOT]	T <CR>	Traction.
[ROOT]	1 <CR>	X-direction.
[ROOT]	100. <CR>	Magnitude. Note that this is a force per unit area. The total force is 2000 N. The dimension of the tip is 20 mm (and unit thickness). Therefore, 2000/20 = 100. N/mm.
[ROOT]	C <CR>	Confirm.

[ROOT]	N <CR>		No more BCs.
[MENU]	PREP	UP	Move up one menu.
			**BCSET input has been completed.
[MENU]	EXIT		Proceed to BESTVIEW exit.
[PROMPT]	[YES]		Save this database.
[PROMPT]	[YES]		Exit BESTVIEW now.

INPUT FOCUS	*COMMAND/DATA ENTRY*	*COMMENTS*

At this point, the GPBEST data file has been created by BESTVIEW. Its name is `example2.DAT`. *Proceed to run the analysis. It should only take a few seconds to complete. After the program completes running, rename the neutral file.*

[UNIX]	`< example2.DAT best-s > example2.res`
[UNIX]	`mv NEUTRAL.OUT example2.neu`

INPUT FOCUS	*COMMAND/DATA ENTRY*	*COMMENTS*

You can view the GPBEST results from information in the neutral file (`example2.neu`*). For this step, it is not necessary to open up the previously saved database. The GPBEST neutral file contains the boundary element model and results information; which is all that is needed.*

[UNIX]	bestview	Start BESTVIEW.
[PROMPT]	<ESC> example0 [OK]	Specify a new name for the database.
[MENU]	POST-RESULTS	
[MENU]	READ-GPBEST-RES.	Read in NEUTRAL file.
[ROOT]	example2.neu	Specify the name of the NEUTRAL file from the GPBEST run.
[MENU]	CDRAW	This displays the boundary element model in the [DISPLAY] window.

INPUT FOCUS	*COMMAND/DATA ENTRY*	*COMMENTS*

Plot the deformed beam along with the original (undeformed) geometry.

[MENU]	DEFORMED-GEOMETRY	Still in the POST-RESULTS menu.
[PROMPT]	[ON]	Turn deformed plot ON.
[PROMPT]	MANUAL [OK]	
[PROMPT]	[OK]	Accept the default scale factor for the deformed shape.
[MENU]	CDRAW	
[PROMPT]	[YES]	Display both undeformed and deformed geometry. At this point, the [DISPLAY] window appears as shown in the following figure.

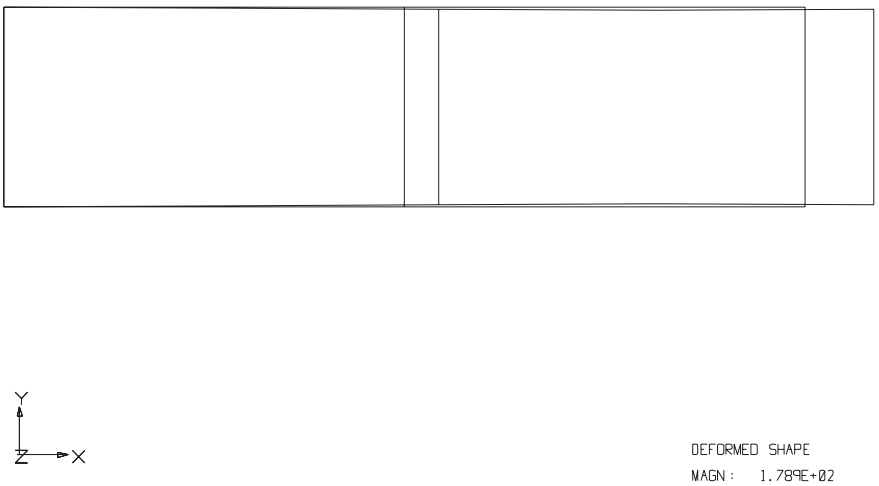

Fig. 8.2.1 Deformed Geometry

NOTE: The extra line appearing in this figure was automatically created by GPBEST. GPBEST generates an internal mesh is for post-processing purposes. The **CONTour card triggers this step.

INPUT FOCUS	*COMMAND/DATA ENTRY*		*COMMENTS*

*The Von Mises stress plot is easily displayed by changing the MODE. For this problem, the stress is uniform in the interior. Note, however, that the interior stress is displayed even though there really is no mesh in the interior. This is because GPBEST automatically creates a temporary interior mesh for 2-D problems for interior post-processing purposes. The CONTOUR card in the **CASE data block triggers this step. It is not necessary to create an interior mesh for post-processing purposes.*

[MENU]	MODE		
[MENU]	FRINGE-PLOT		
[MENU]	CDRAW		The Von Mises stress is displayed on a fringe plot.
[MENU]	POST	UP	Proceed to exit BESTVIEW.
[MENU]	EXIT		
[PROMPT]	[NO]		Do not save this session.
[PROMPT]	[YES]		

The file example2.DAT as created by PREPARE ANALYSIS option.
(This data file would be used to run in GPBEST.)

```
**CASE
TITLE  SIMPLE BEAM
PLANE STRESS
ELASTIC
TIME  1.0
ECHO
NEUTRAL
CONT

**MATE
ID  STEEL
DENS      7.83300E-09
EMOD      207000.
POIS     0.300000

**GMR
ID beam1
THIC      1.00000
MATE  STEEL
TREF    0.
TINT    0.
POIN
    1     0.000000E+00     0.000000E+00     0.000000E+00
    2     0.400000E+02     0.000000E+00     0.000000E+00
    3     0.800000E+02     0.000000E+00     0.000000E+00
    4     0.800000E+02     0.100000E+02     0.000000E+00
    5     0.800000E+02     0.200000E+02     0.000000E+00
    6     0.400000E+02     0.200000E+02     0.000000E+00
    7     0.000000E+00     0.200000E+02     0.000000E+00
    8     0.000000E+00     0.100000E+02     0.000000E+00
SURF beam1
TYPE QUAD SERE
ELEM
     1     1     2     3
     2     3     4     5
     3     5     6     7
     4     7     8     1
NORM   +

**BCSET
ID WALL
VALUE
GMR beam1
SURF beam1
ELEM   4
DISP     1
SPLIST ALL
T  1    0.
DISP     2
SPLIST ALL
```

```
T  1    0.

**BCSET
ID TIP
VALUE
GMR beam1
SURF beam1
ELEM   2
TRAC     1
SPLIST ALL
T  1     100.0000
```

8.3 PROBLEM #3

DESCRIPTION: This example presents a complete tutorial of the BESTVIEW program. It deals with geometry building, meshing, analysis through GPBEST and post-processing of the results through BESTVIEW. For a detailed description of the various commands involved, you may refer to appropriate sections of the BESTVIEW manual.

Problem Specification

A spherical pressure vessel with an inner radius of 1 unit and an outer radius of 2 units is acted upon by a uniform pressure of 1 unit on its inner surface. Steps involved in preparing a model, meshing, elastic analysis and post-processing the results are demonstrated in the following sequence of commands. It is to be noted that these sequences are not necessarily the best ones as they have been designed to give you an overall exposure to BESTVIEW. You may use your discretion while trying this example.

In this step, you will start the BESTVIEW program and name the database you will be using:

INPUT FOCUS	*COMMAND/DATA ENTRY*	*COMMENTS*
[ROOT]	bestview	Start BESTVIEW.
[PROMPT]	<ESC> example3[OK]	Name of new database.
[MENU]	SET DIGITIZER	Turn DIGITIZER mode OFF.
[PROMPT]	[OFF]	

This method of creating this model will be to define the outer surface first by defining POINTS, LINES and then SURFACES:

INPUT FOCUS	*COMMAND/DATA ENTRY*	*COMMENTS*
[MENU]	DEFINE-GEOMETRY	
[MENU]	POINT	
[MENU]	ENTER	
[PROMPT]	<ESC> 1 [OK]	First POINT number is 1.
[PROMPT]	2,0,0 <CR>	Point 1.
[PROMPT]	0,-2,0 <CR>	Point 2.
[PROMPT]	0,0,2 <CR>	Point 3.
[PROMPT]	1.41,-1.41,0 <CR>	Point 4.
[PROMPT]	0,-1.41,1.41 <CR>	Point 5.
[PROMPT]	1.41,0,1.41 <CR>	Point 6.
[PROMPT]	1.155,-1.155,1.155 <CR>	Point 7.
[PROMPT]	1.344, -1.344, 0.615 <CR>	Point 8.
[PROMPT]	1.347,-0.6,1.347 <CR>	Point 9.
[PROMPT]	0.6,-1.347,1.347 <CR>	Point 10.

[PROMPT]	0.763,-1.844,0.0 <CR>		Point 11.
[PROMPT]	1.844,-0.763,0.0 <CR>		Point 12.
[PROMPT]	0.0,-1.831,0.793 <CR>		Point 13.
[PROMPT]	0.0,-0.734,1.856 <CR>		Point 14.
[PROMPT]	0.733,0.0,1.856 <CR>		Point 15.
[PROMPT]	1.831,0.0,0.793 <CR>		Point 16.
[PROMPT]	<ESC>		
[MENU]	DEFI.POIN	UP	Move up one menu.

INPUT FOCUS	*COMMAND/DATA ENTRY*		*COMMENTS*
[MENU]	LINE		
[MENU]	ARC		
[PROMPT]	<ESC> 1 [OK]		First LINE number is 1.
[PROMPT]	2,11,4 <CR>		Line 1.
[PROMPT]	4,12,1 <CR>		Line 2.
[PROMPT]	1,16,6 <CR>		Line 3.
[PROMPT]	6,15,3 <CR>		Line 4.
[PROMPT]	3,14,5 <CR>		Line 5.
[PROMPT]	5,13,2 <CR>		Line 6.
[PROMPT]	4,8,7 <CR>		Line 7.
[PROMPT]	7,9,6 <CR>		Line 8.
[PROMPT]	7,10,5 <CR>		Line 9.
[PROMPT]	<ESC>		
[MENU]	CDRAW		
[MENU]	DEFI.LINE	UP	

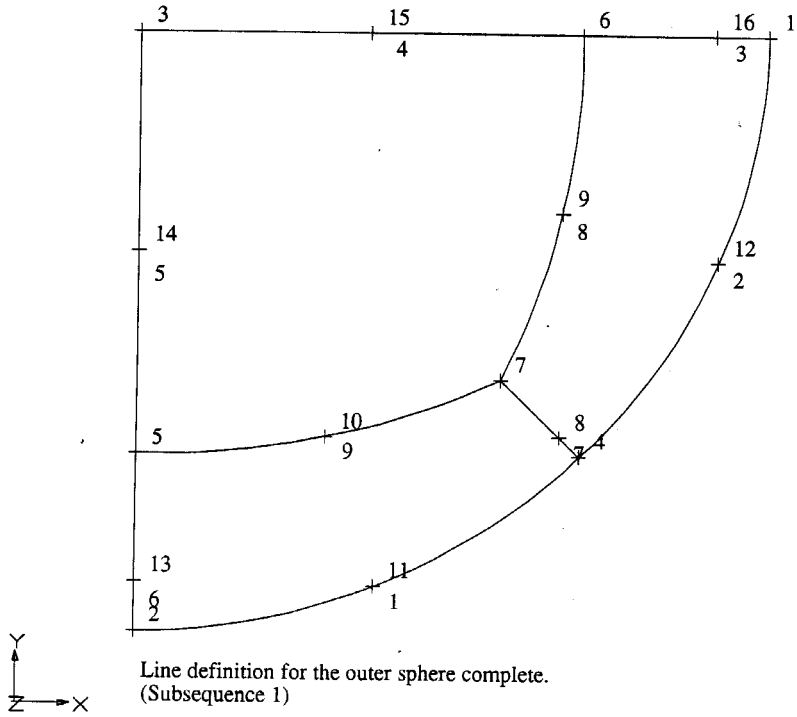

Line definition for the outer sphere complete.
(Subsequence 1)

INPUT FOCUS	*COMMAND/DATA ENTRY*	*COMMENTS*
[MENU]	SURFACE	
[MENU]	FOUR-EDGES	
[PROMPT]	<ESC> 1 [OK]	First SURFACE number is 1.
[PROMPT]	1,7,9,6 <CR>	Surface 1.
[PROMPT]	2,3,8,7 <CR>	Surface 2.
[PROMPT]	8,4,5,9 <CR>	Surface 3.
[PROMPT]	<ESC>	
[MENU]	DEFI.SURF UP	

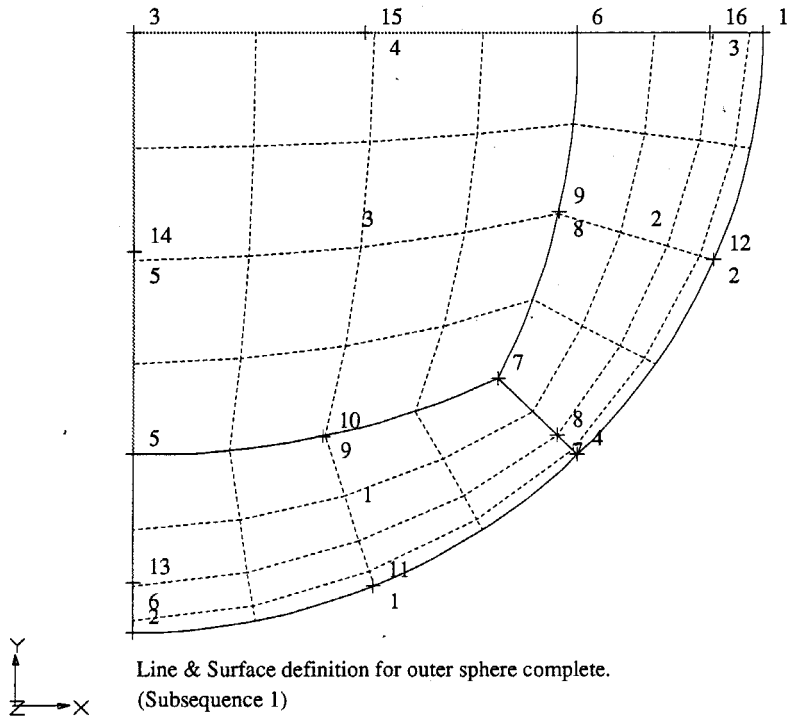

Line & Surface definition for outer sphere complete.
(Subsequence 1)

INPUT FOCUS	*COMMAND/DATA ENTRY*	*COMMENTS*
Now define the inner surfaces:		
[MENU]	POINT	
[MENU]	ENTER	
[PROMPT]	<ESC> 17 [OK]	First POINT number is 17.
[PROMPT]	1,0,0<CR>	Point 17.
[PROMPT]	0,-1,0 <CR>	Point 18.
[PROMPT]	0,0,1 <CR>	Point 19.
[PROMPT]	0.71,-0.71,0 <CR>	Point 20.
[PROMPT]	0,-0.71,0.71 <CR>	Point 21.
[PROMPT]	0.71,0,0.71 <CR>	Point 22.
[PROMPT]	0.58,-0.58,0.58 <CR>	Point 23.
[PROMPT]	0.327,-0.89,0.327 <CR>	Point 24.
[PROMPT]	0.677,-0.3,0.677 <CR>	Point 25.
[PROMPT]	0.304,-0.677,0.677 <CR>	Point 26.
[PROMPT]	0.89,-0.327,0.327 <CR>	Point 27.
[PROMPT]	0.677,-0.677,0.305 <CR>	Point 28.
[PROMPT]	0.326,-0.326,0.891 <CR>	Point 29.
[PROMPT]	0.0,-0.927,0.384 <CR>	Point 30.
[PROMPT]	0.0,-0.384,0.927 <CR>	Point 31.
[PROMPT]	0.384,0.0,0.927 <CR>	Point 32.

[PROMPT]	0.927,0.0,0.384 <CR>		Point 32.
[PROMPT]	0.927,-.384,0. <CR>		Point 32.
[PROMPT]	0.384,-.927,0. <CR>		Point 32.
[PROMPT]	<ESC>		
[MENU]	DEFI.POIN	UP	Move up one menu.

INPUT FOCUS	*COMMAND/DATA ENTRY*		*COMMENTS*
[MENU]	LINE		
[MENU]	ARC		
[PROMPT]	<ESC> 10 [OK]		First LINE number is 10.
[PROMPT]	18,35,20 <CR>		Line 10.
[PROMPT]	20,34,17 <CR>		Line 11.
[PROMPT]	17,33,22 <CR>		Line 12.
[PROMPT]	22,32,19 <CR>		Line 13.
[PROMPT]	19,31,21 <CR>		Line 14.
[PROMPT]	21,30,18 <CR>		Line 15.
[PROMPT]	23,28,20 <CR>		Line 16.
[PROMPT]	23,25,22 <CR>		Line 17.
[PROMPT]	23,26,21 <CR>		Line 18.
[PROMPT]	<ESC>		
[MENU]	ENTER		
[PROMPT]	<ESC> 19 [OK]		First LINE number is 19.
[PROMPT]	19,3 <CR>		Line 19.
[PROMPT]	5,21 <CR>		Line 20.
[PROMPT]	2,18 <CR>		Line 21.
[PROMPT]	4,20 <CR>		Line 22.
[PROMPT]	1,17 <CR>		Line 23.
[PROMPT]	6,22 <CR>		Line 24.
[PROMPT]	<ESC>		
[MENU]	DEFI.LINE	UP	
[MENU]	SURFACE		
[MENU]	FOUR-EDGES		
[PROMPT]	<ESC> 4 [OK]		First SURFACE number is 4.
[PROMPT]	10,16,18,15 <CR>		Surface 4.
[PROMPT]	11,12,17,16 <CR>		Surface 5.
[PROMPT]	17,13,14,18 <CR>		Surface 6.
[PROMPT]	21,1,22,10 <CR>		Surface 7.
[PROMPT]	22,2,23,11 <CR>		Surface 8.
[PROMPT]	23,3,24,12 <CR>		Surface 9.
[PROMPT]	24,4,19,13 <CR>		Surface 10.
[PROMPT]	19,5,20,14 <CR>		Surface 11.

[PROMPT]	20,6,21,15 <CR>		Surface 12.
[PROMPT]	<ESC>		
[MENU]	DEFI.SURF	UP	
[MENU]	CDRAW		

INPUT FOCUS	*COMMAND/DATA ENTRY*		*COMMENTS*
Get a better viewing angle:			
[MENU]	VIEW-OPTIONS		
[MENU]	ROTATE		
[PROMPT]	-60,-30,-30 [OK]		This is usually a good isometric viewing angle for 3-D models.
[PROMPT]	[OK]		
[MENU]	CDRAW		At this point, the [DISPLAY] window should appear as shown in the following figure.
[MENU]	GLOB.VIEW	UP	Move up one menu.

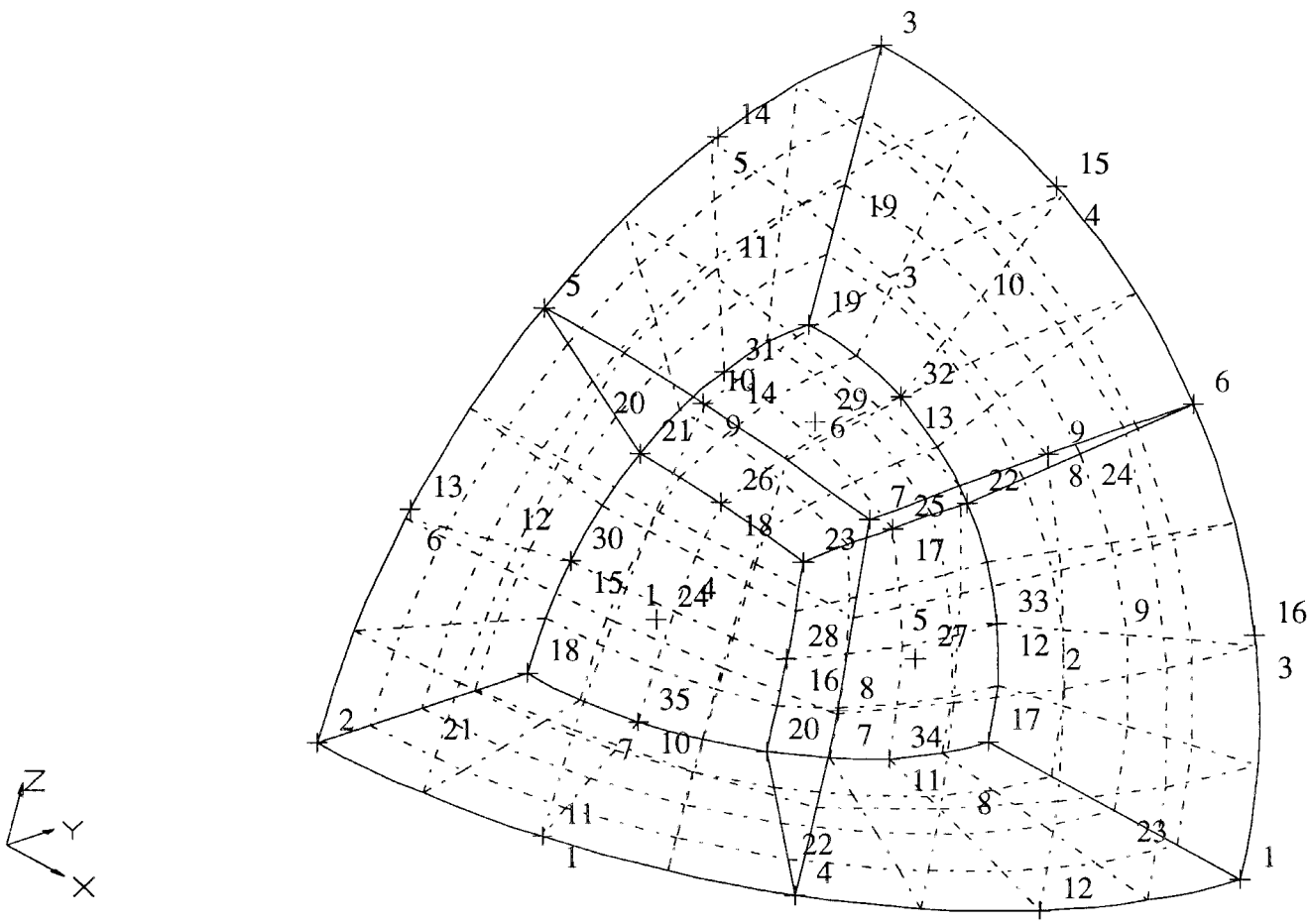

INPUT FOCUS	*COMMAND/DATA ENTRY*		*COMMENTS*
Define GROUP and generate mesh:			
[MENU]	GROUPS		
[MENU]	ADD ENTITY		
[PROMPT]	g01 [OK]		Name of GMR.
[MENU]	SURFACE		
[PROMPT]	<ESC> 1,12 [OK]		
[PROMPT]	[YES]		Save current changes.
[PROMPT]	<ESC> RED [OK]		Color of group. Color choices are displayed in the [ROOT] window.
[MENU]	GLOB.GROU	UP	Move up one menu.
[MENU]	DEFI	UP	Move up one menu.
[MENU]	CDRAW		g01 is displayed in RED.

INPUT FOCUS	*COMMAND/DATA ENTRY*		*COMMENTS*
[MENU]	GENERATE MESH		
[MENU]	FAST-MESH		
[ROOT]	0.005 <CR>		A message appears in the [ROOT] window to ‘‘Give search radius:’’
[ROOT]	2 <CR>		A message appears in the [ROOT] window to ‘‘Give mesh density for patches <n>.’’ Specify two elements in each patch (surface) direction.
[MENU]	CDRAW		
[MENU]	GENE	UP	Move up one menu. The mesh has been created.

INPUT FOCUS	*COMMAND/DATA ENTRY*		*COMMENTS*
At this point, it would be helpful to display just the node and element entities:			
[MENU]	DISPLAY-OPTIONS		
[MENU]	ENTITY		
[MENU]	ALL		
[PROMPT]	[OFF]		Turn everything OFF.
[MENU]	MESH		
[PROMPT]	[ON]		Turn only MESH items ON (NODES and ELEMENTS).
[MENU]	GLOB.DISP.ENTI	UP	Move up one menu.
[MENU]	LABEL		
[MENU]	MESH		

[PROMPT]	OFF	
[MENU]	ELEMENT	
[MENU]	ON	
[MENU]	CDRAW	See [DISPLAY] window in Figure below. Only element numbers are displayed.
[MENU]	GLOB.DISP.LABE	UP Move up one menu.
[MENU]	GLOB.DISP	UP Move up one menu.

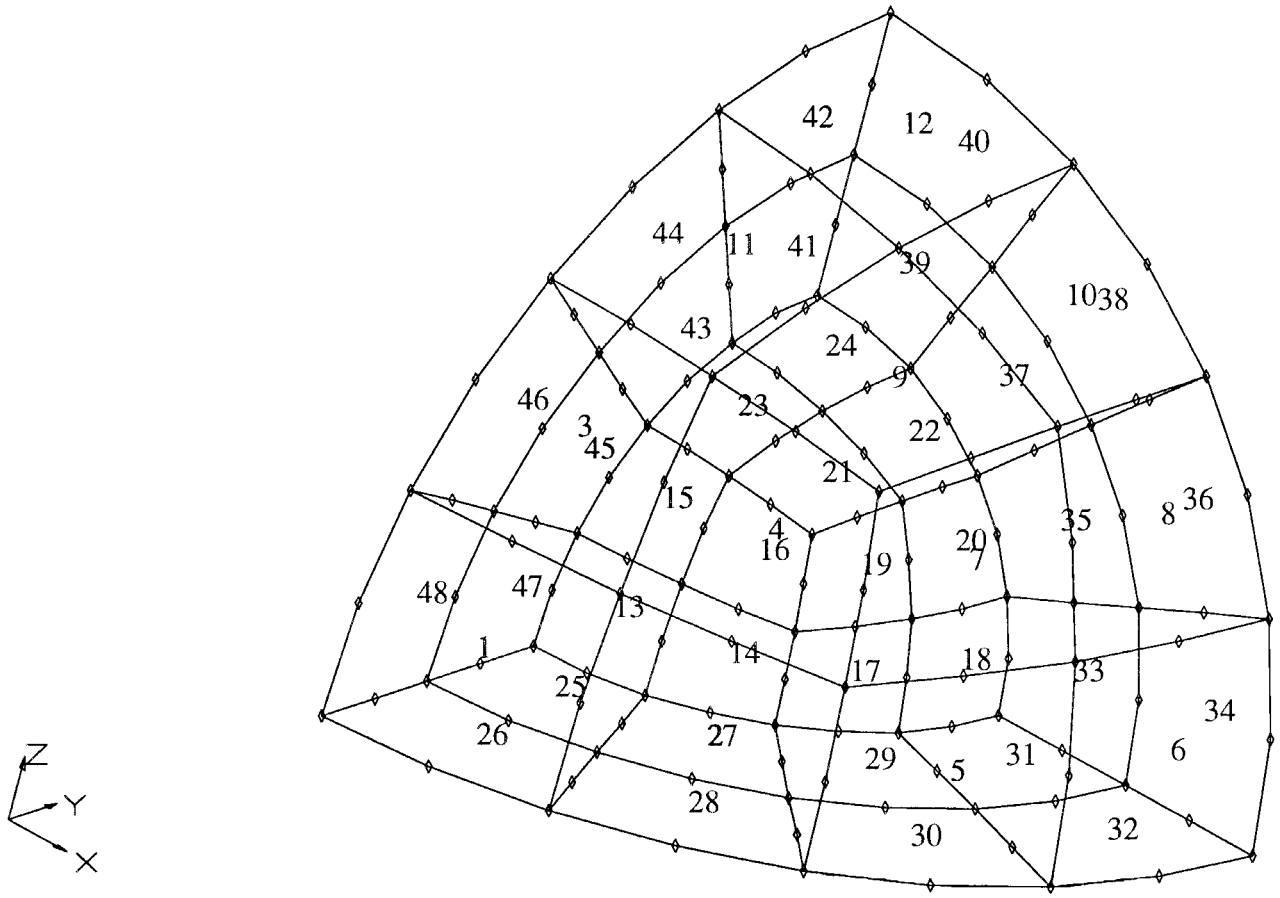

INPUT FOCUS	*COMMAND/DATA ENTRY*	*COMMENTS*
Proceed to create a GPBEST data file:		
[MENU]	PREPARE-ANALYSIS	
[ROOT]	<CR>	Press <CR> to continue with "Prepare Analysis."
[MENU]	CASE	
[MENU]	TITLE	
[ROOT]	PROBLEM2 <CR>	
[MENU]	DIMENSION	
[MENU]	1. TDAN: 3-D ANALYSIS	
[MENU]	1. NONE	No symmetry.
[MENU]	PREP.CASE.DIME UP	
[MENU]	ANALYSIS TYPE	
[MENU]	ELASTIC	
[MENU]	PREP.CASE.ANAL UP	
[MENU]	PREP.CASE UP	**CASE input has been completed.

INPUT FOCUS	*COMMAND/DATA ENTRY*	*COMMENTS*
[MENU]	MATERIAL	Define material parameters.
[MENU]	DEFINE	
[ROOT]	MAT1 <CR>	Name of the beam material.
[ROOT]	I <CR>	Isotropic.
[ROOT]	0 <CR>	Temperature $T = 0$.
[ROOT]	1 <CR>	Young's Modulus.
[MENU]	0.25 <CR>	Poisson's Ratio.
[ROOT]	1 <CR>	Mass density.
[MENU]	PREP.MATE UP	Move up one menu. **MATE input has been completed.

INPUT FOCUS	*COMMAND/DATA ENTRY*	*COMMENTS*
[MENU]	GMR	
[ROOT]	20 <CR>	Reference temperature $T = 20$.
[MENU]	NEXT GMR	
[PROMPT]	[NO]	No reference points in this GMR.

INPUT FOCUS	*COMMAND/DATA ENTRY*	*COMMENTS*

Define boundary conditions. The first three boundary conditions involve conventional symmetry conditions. the final boundary condition is a traction.

[MENU]	BCSET	
[ROOT]	BC1<CR>	Name of boundary condition set.
[ROOT]	G <CR>	Global value.
[ROOT]	S <CR>	Selected elements.
[PROMPT]	[NO]	Do not use digitizer to select elements.
[PROMPT]	[NO]	Do not turn hidden on.
[PROMPT]	Add [OK]	Add to boundary condition.
[ROOT]	25-32 <CR>	Element numbers.
[ROOT]	. <CR>	Period (end input).
[ROOT]	C <CR>	In [DISPLAY] window, elements are highlighted. Confirm that this is correct.
[ROOT]	A <CR>	All nodes on elements.
[ROOT]	N <CR>	No time variation.
[ROOT]	D <CR>	Displacement.
[ROOT]	3 <CR>	Constrain Z-direction.
[ROOT]	0 <CR>	Zero magnitude.
[ROOT]	C <CR>	Confirm.
[ROOT]	N <CR>	
[MENU]	BCSET	Proceed to constrain X-direction.
[ROOT]	BC2 <CR>	Name of boundary condition set.
[ROOT]	G <CR>	Global value.
[ROOT]	S <CR>	Selected elements.
[PROMPT]	[NO]	Do not use digitizer to select elements.
[PROMPT]	[NO]	Do not turn hidden on.
[PROMPT]	Add [OK]	Add to boundary condition.
[ROOT]	41-48 <CR>	Element numbers.
[ROOT]	. <CR>	Period (end input).
[ROOT]	C <CR>	In [DISPLAY] window, elements are highlighted. Confirm that this is correct.
[ROOT]	A <CR>	All nodes on elements.
[ROOT]	N <CR>	No time variation.
[ROOT]	D <CR>	Displacement.
[ROOT]	1 <CR>	Constrain X-direction
[ROOT]	0 <CR>	Zero magnitude.

[ROOT]	C <CR>	Confirm.
[ROOT]	N <CR>	
[MENU]	BCSET	Proceed to constrain Y-direction.
[ROOT]	BC3 <CR>	Name of boundary condition set.
[ROOT]	G <CR>	Global value.
[ROOT]	S <CR>	Selected elements.
[PROMPT]	[NO]	Do not use digitizer to select elements.
[PROMPT]	[NO]	Do not turn hidden on.
[PROMPT]	Add [OK]	Add to boundary condition.
[ROOT]	33-40 <CR>	Element numbers.
[ROOT]	. <CR>	Period (end input).
[ROOT]	C <CR>	In [DISPLAY] window, elements are highlighted. Confirm that this is correct.
[ROOT]	A <CR>	All nodes on elements.
[ROOT]	N <CR>	No time variation.
[ROOT]	D <CR>	Displacement.
[ROOT]	2 <CR>	Constrain Y-direction.
[ROOT]	0 <CR>	Zero magnitude.
[ROOT]	C <CR>	Confirm.
[ROOT]	N <CR>	

INPUT FOCUS	*COMMAND/DATA ENTRY*	*COMMENTS*
[MENU]	BCSET	Proceed to define the distributed load (traction).
[ROOT]	BC4 <CR>	Name of boundary condition set.
[ROOT]	L <CR>	Local boundary condition.
[ROOT]	S <CR>	Selected elements.
[PROMPT]	[NO]	No digitizer.
[PROMPT]	[NO]	No hidden.
[PROMPT]	Add [OK]	
[ROOT]	13-24 <CR>	Elements 13-24.
[ROOT]	. <CR>	Period.
[ROOT]	C <CR>	In [DISPLAY] window, elements are highlighted.
[ROOT]	A <CR>	All nodes on elements.
[ROOT]	N <CR>	No time variation.
[ROOT]	T <CR>	Traction.
[ROOT]	-1.0 <CR>	Magnitude.
[ROOT]	C <CR>	Confirm.
[ROOT]	N <CR>	No more BCs.

[MENU]	PREP	UP	Move up one menu. **BCSET input has been completed.
[MENU]	EXIT		Proceed to exit BESTVIEW.
[PROMPT]	[YES]		Save this database.
[PROMPT]	[YES]		Exit BESTVIEW now.

INPUT FOCUS	*COMMAND/DATA ENTRY*	*COMMENTS*

At this point, the GPBEST data file has been created by BESTVIEW. Its name is example3.DAT. Proceed to run the analysis. After the program completes running, rename the neutral file.

[UNIX]	`< example3.DAT best-s > example3.res` <CR>
[UNIX]	`mv NEUTRAL.OUT example3.neu`

INPUT FOCUS	*COMMAND/DATA ENTRY*	*COMMENTS*

If the job ran successfully, proceed to view the results in BESTVIEW. For this step, it is not necessary to open up the previously saved database. The GPBEST neutral file contains the boundary element model and results information; which is all that is needed:

[UNIX]	bestview	Start BESTVIEW.
[PROMPT]	<ESC> example0 [OK]	Specify a new name for the database.
[MENU]	POST-RESULTS	
[MENU]	READ-GPBEST-RES.	Read in NEUTRAL file.
[ROOT]	example3.neu	Specify the name of the NEUTRAL file from the GPBEST run.
[MENU]	CDRAW	This displays the boundary element model in the [DISPLAY] window.

INPUT FOCUS	*COMMAND/DATA ENTRY*	*COMMENTS*

Get a better viewing angle:

[MENU]	VIEW-OPTIONS		
[MENU]	ROTATE		
[PROMPT]	0,120,0 [OK]		Rotation angle.
[PROMPT]	30,0,0 [OK]		Rotation angle.
[PROMPT]	[OK]		
[MENU]	GLOB.VIEW	UP	Move up one menu.
[MENU]	MODE		
[MENU]	LINE CONTOUR		

[MENU]	CDRAW	
[PROMPT]	[YES]	Put alphabetic labels on contours. A plot of von Mises stress appears in the [DISPLAY] window.

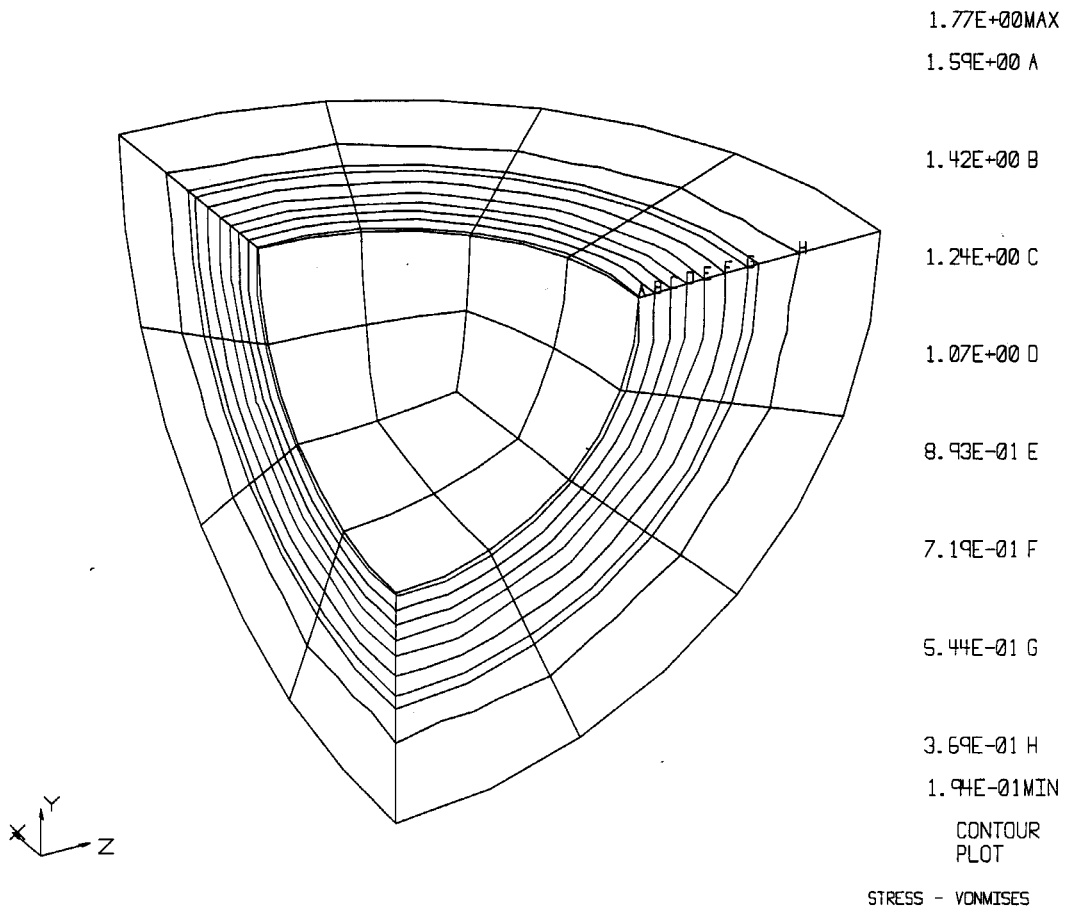

INPUT FOCUS	*COMMAND/DATA ENTRY*	*COMMENTS*
[MENU]	CONTOURS	
[MENU]	FUNCTION TYPE	
[PROMPT]	DISP <CR>	Plot X-component of displacement.
[PROMPT]	X <CR>	
[MENU]	CDRAW	
[PROMPT]	[YES]	Put alphabetic labels on contours. A plot of von Mises stress appears in the [DISPLAY] window.
[MENU]	POST CONT UP	Proceed to exit BESTVIEW.

[MENU]	POST	UP
[MENU]	EXIT	
[PROMPT]	[NO]	Do not save this session.
[PROMPT]	[YES]	

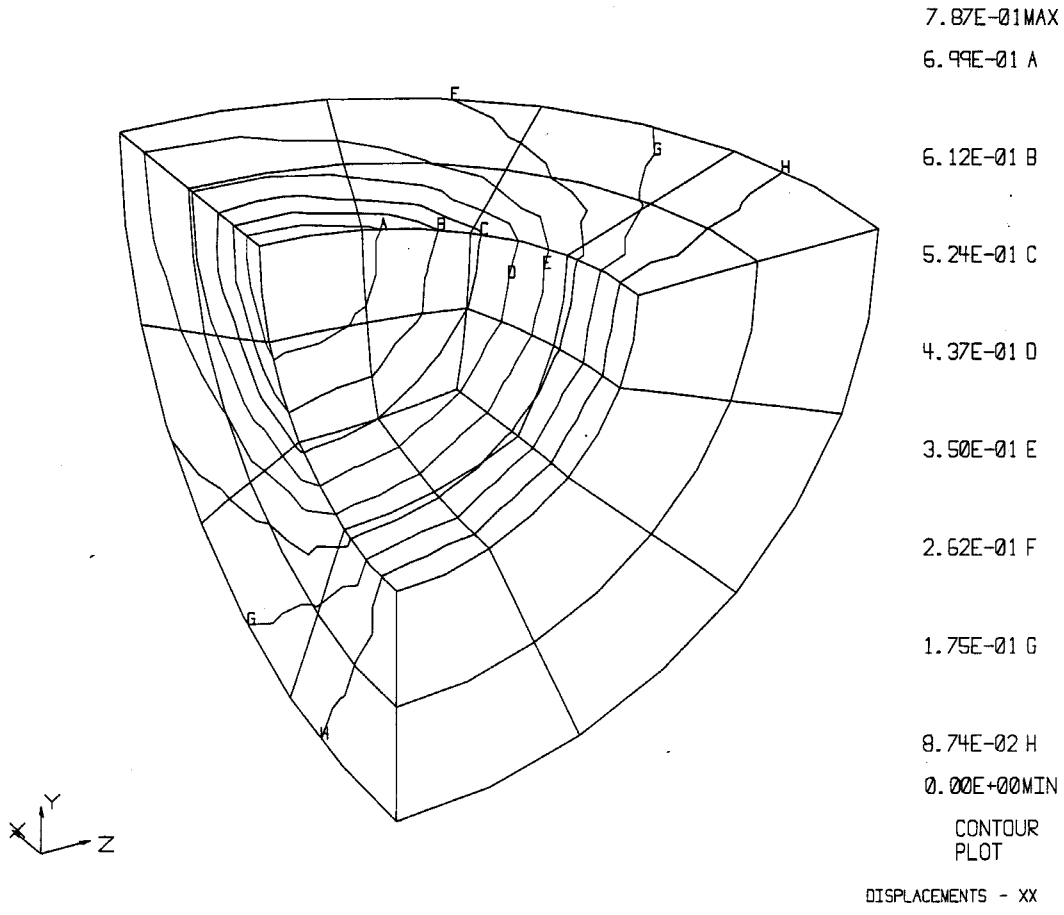

8.4 PROBLEM #4

DESCRIPTION:

A 3-D cantilever beam is shown in Figure 8.4.1. It is fixed at the wall and it is free to move at the free end (tip). A distributed static force of 2000 N (total) acts in the outward ($+X$) direction at the tip. The object is to determine the stress and deformation state of the beam under the given load.

Although this example is not a ‘‘large’’ model, it illustrates how multi-GMRs are handled. In particular, special modeling considerations at the interface are highlighted.

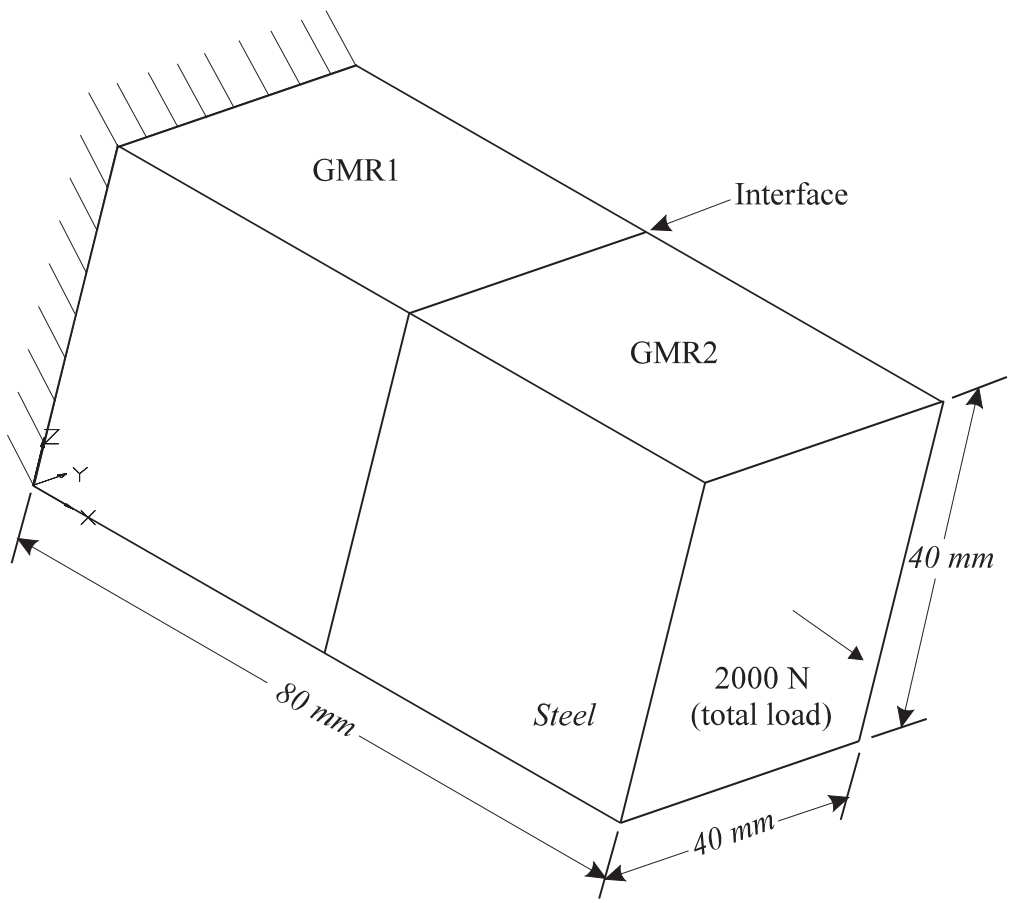

Fig. 8.4.1 3-D Beam Geometry

INPUT FOCUS	*COMMAND/DATA ENTRY*		*COMMENTS*

In this step, you will start the BESTVIEW program and name the database you will be using:

[ROOT]	bestview		Start BESTVIEW.
[PROMPT]	<ESC> example4[OK]		Name of database.
[MENU]	SET-DIGITIZER		Turn DIGITIZER mode OFF.
[PROMPT]	[OFF]		

INPUT FOCUS	*COMMAND/DATA ENTRY*		*COMMENTS*

The method of creating this beam model will be to create the first GMR, then create the second GMR. To create the first GMR, we will define four corner points, define a surface from them, translate the surface to create a second surface, and define the remaining surfaces through the corner points:

[MENU]	DEFINE-GEOMETRY		
[MENU]	POINT		
[MENU]	ENTER		
[PROMPT]	<ESC> 1 [OK]		First POINT number is 1.
[PROMPT]	0,0,0 <CR>		Point 1.
[PROMPT]	0,40,0 <CR>		Point 2.
[PROMPT]	0,40,40 <CR>		Point 3.
[PROMPT]	0,0,40 <CR>		Point 4. This defines the four corner points of the beam at the wall.
[PROMPT]	<ESC>		
[MENU]	DEFI.POIN	UP	Move up one menu.
[MENU]	VIEW-OPTIONS		Look for a better viewing angle of the model.
[MENU]	ROTATE		
[PROMPT]	-60,-30,-30 [OK]		This is usually a good isometric viewing angle for 3-D models.
[PROMPT]	[OK]		
[PROMPT]	CDRAW		At this pint, the [DISPLAY] window should appear as shown in the following Figure.
[MENU]	GLOB.VIEW	UP	Move up one menu.

Fig. 8.4.2 Geometric Corner Points at the Wall

INPUT FOCUS	*COMMAND/DATA ENTRY*	*COMMENTS*

The four points defined in the previous step can be used to construct a geometric surface. From this surface, a second surface can be constructed through a translation. Once these two surfaces are defined along with their corner points, the remaining four surfaces of the cube can be defined via corner points:

[MENU]	SURFACE	
[MENU]	ENTER	
[PROMPT]	<ESC> 1 [OK]	First SURFACE number is 1.
[PROMPT]	1,2,3,4 <CR>	Surface 1, at the ‘‘wall.’’ Surface 1

		appears is [DISPLAY] window.
[PROMPT]	<ESC>	End input.
[MENU]	TRANSLATE	
[PROMPT]	<ESC> 2 [OK]	The next surface number is 2.
[PROMPT]	<ESC> 1 [OK]	Translate surface number 1 to create surface number 2.
[PROMPT]	40,0,0 [OK]	Translate 40 mm in X-direction.
[PROMPT]	<ESC> <ESC>	
[MENU]	CDRAW	The [DISPLAY] window should appear as below.

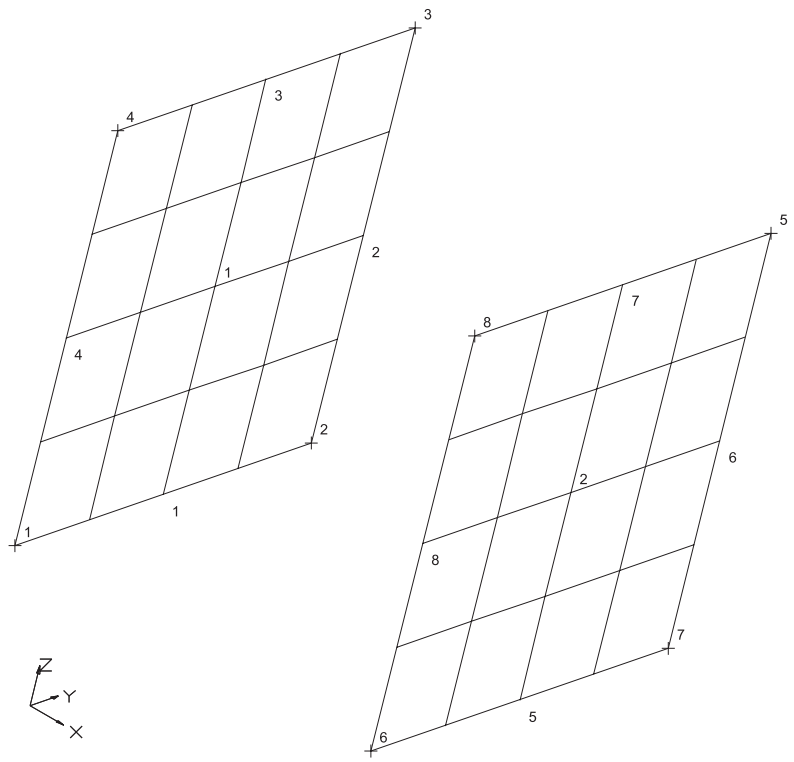

Fig. 8.4.3 Geometric Points, Lines and Surfaces (GMR1)

INPUT FOCUS	*COMMAND/DATA ENTRY*		*COMMENTS*
[MENU]	ENTER		Proceed to define four remaining surfaces using corner points.
[PROMPT]	<ESC> 3 [OK]		
[PROMPT]	1,6,7,2 [OK]		Surface 3.
[PROMPT]	1,6,8,4 [OK]		Surface 4.
[PROMPT]	2,7,5,3 [OK]		Surface 5.
[PROMPT]	4,8,5,3 [OK]		Surface 6.
[PROMPT]	<ESC>		
[MENU]	TRANSLATE		Proceed to create six new surfaces by translating surface 1-6. This will define GMR2 and will complete the geometry modeling of the beam.
[PROMPT]	<ESC> 7 [OK]		The next surface number is 7.
[PROMPT]	<ESC> 1,6 [OK]		
[PROMPT]	40,0,0 [OK]		
[PROMPT]	<ESC> <ESC>		
[MENU]	CDRAW		Two cubes appear in the [DISPLAY] window.
[MENU]	DELETE		Surface 7 must be deleted since it is coincident with surface 2. BESTVIEW is able to handle the interface at surface 2.
[PROMPT]	<ESC> 7 [OK]		Select surface 7.
[PROMPT]	[YES] [YES]		
[PROMPT]	<ESC> <ESC>		
[MENU]	CDRAW		
[MENU]	DEFI.SURF	UP	
[MENU]	DEFI	UP	

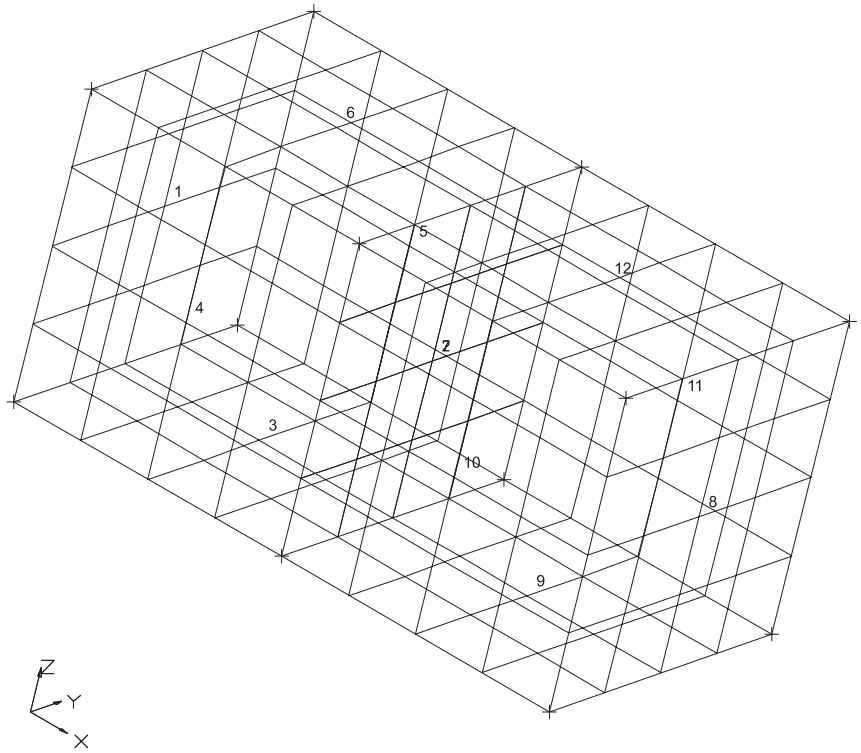

Fig. 8.4.4 Surfaces on the Faces of the Two Cubes

INPUT FOCUS	*COMMAND/DATA ENTRY*	*COMMENTS*

In this model, we are using two groups, or GMRs, to model the beam. We must place the appropriate surfaces in each group. Group GMR1 will contain surfaces 1-6. GMR2 will contain surfaces 2, 8-12. As mentioned previously, BESTVIEW does not require two separate surfaces at the interface:

[MENU]	GROUPS	
[MENU]	ADD ENTITY	
[PROMPT]	GMR1 [OK]	Name of GMR.
[MENU]	SURFACE	
[PROMPT]	<ESC> 1,6 [OK]	
[PROMPT]	[YES]	Save current changes.
[PROMPT]	<ESC> PINK [OK]	Color of group. Color choices are displayed in the [ROOT] window.

[MENU]	ADD ENTITY		Proceed to define group GMR2.
[PROMPT]	GMR2 [OK]		Name of GMR.
[MENU]	SURFACE		
[PROMPT]	<ESC> 2 [OK]		
[PROMPT]	[YES]		Save current changes.
[PROMPT]	<ESC> CYAN [OK]		Color of group.
[MENU]	ADD ENTITY		
[PROMPT]	GMR2 [OK]		Name of GMR.
[MENU]	SURFACE		
[PROMPT]	<ESC> 8,12 [OK]		
[PROMPT]	[YES]		Save current changes.
[PROMPT]	[OK]		Keep CYAN as color of group GMR2.
[MENU]	GLOB.GROU	UP	Move up one menu.
[MENU]	CDRAW		GMR1 is displayed in PINK, GMR2 is displayed in CYAN.

INPUT FOCUS	*COMMAND/DATA ENTRY*		*COMMENTS*

The groups GMR1 and GMR2 created in the previous step are now used to generate the boundary element mesh. The boundary element mesh consists of boundary element and nodes. Notice that elements are only placed on the surface of the beam. No interior mesh is required. This simplifies the meshing of complex 3-D models considerably:

[MENU]	GENERATE MESH		
[MENU]	FAST-MESH		
[ROOT]	0.005 <CR>		A message appears in the [ROOT] window to ‘‘Give search radius.’’
[ROOT]	2 <CR>		A message appears in the [ROOT] window to ‘‘Give mesh density for patches <n>.’’ Specify two elements in each patch (surface) direction.
[MENU]	GENE	UP	Move up one menu. The mesh has been created.

INPUT FOCUS	*COMMAND/DATA ENTRY*		*COMMENTS*

At this point, it would be helpful to display just the node and element entities:

[MENU]	DISPLAY-OPTIONS		
[MENU]	ENTITY		
[MENU]	ALL		
[PROMPT]	[OFF]		Turn everything OFF.

[MENU]	MESH		
[PROMPT]	[ON]		Turn only MESH items ON (NODES and ELEMENTS).
[MENU]	GLOB.DISP.ENTI	UP	Move up one menu.
[MENU]	LABEL		
[MENU]	MESH		
[PROMPT]	OFF		
[MENU]	ELEMENT		
[MENU]	ON		
[MENU]	CDRAW		See [DISPLAY] window in Figure 8.4.5. Only element numbers are displayed. Note that the elements at the `WALL` are 1-4. The elements at the `TIP` are 29-32.
[MENU]	GLOB.DISP.LABE	UP	Move up one menu.
[MENU]	GLOB.DISP	UP	Move up one menu.

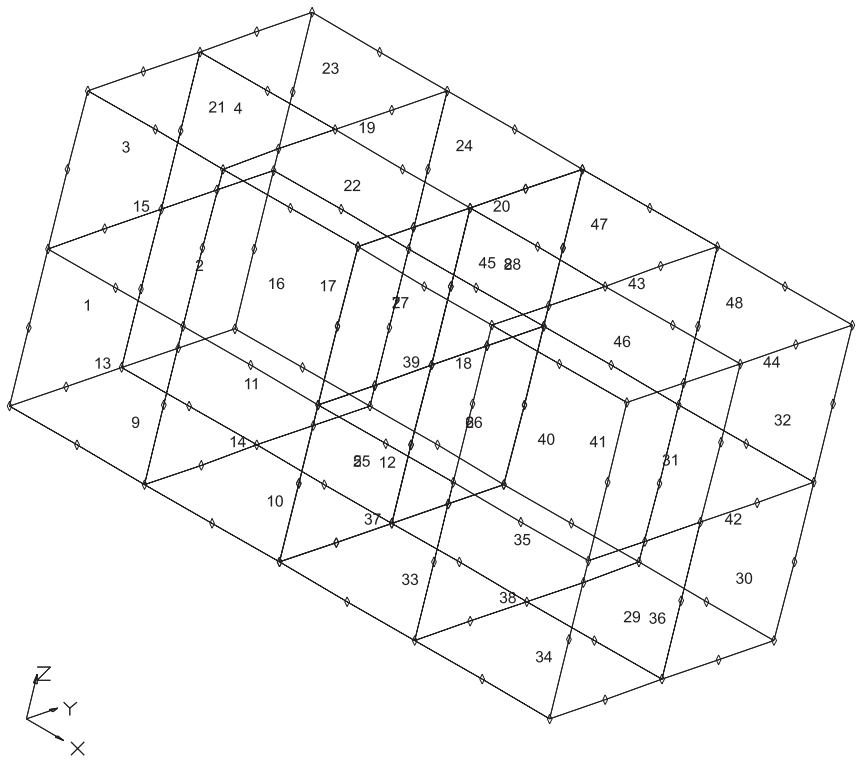

Fig. 8.4.5 Boundary Element Numbers

INPUT FOCUS *COMMAND/DATA ENTRY* *COMMENTS*

The boundary element model has been defined in terms of nodes and elements. Proceed to prepare the

GPBEST data file:

[MENU]	PREPARE-ANALYSIS	
[ROOT]	<CR>	Press <CR> to continue with "Prepare Analysis."
[MENU]	CASE	
[MENU]	TITLE	
[ROOT]	3-D BEAM <CR>	
[MENU]	DIMENSION	
[MENU]	1. TDAN: 3-D ANALYSIS	
[MENU]	1. NONE	No Symmetry.
[MENU]	PREP.CASE.DIME UP	
[MENU]	ANALYSIS TYPE	
[MENU]	ELASTIC	
[MENU]	PREP.CASE.ANAL UP	
[MENU]	PREP.CASE UP	**CASE input has been completed.

INPUT FOCUS	*COMMAND/DATA ENTRY*	*COMMENTS*
[MENU]	MATERIAL	Define material parameters.
[MENU]	DEFINE	
[ROOT]	STEEL <CR>	Name of the beam material.
[ROOT]	I <CR>	Isotropic.
[ROOT]	0 <CR>	Temperature $T = 0$.
[ROOT]	207000.0 <CR>	Young's Modulus $\left(\frac{N}{mm^2}\right)$.
[MENU]	0.3 <CR>	Poisson's Ratio.
[ROOT]	7.833E-9 <CR>	Mass density of steel $\left(\frac{Ns^2}{mm^4}\right)$. Notice that units are chosen that consistent with dimensions of the model which were mm.
[MENU]	PREP.MATE UP	Move up one menu. **MATE input has been completed.

INPUT FOCUS	*COMMAND/DATA ENTRY*	*COMMENTS*
[MENU]	GMR	
[ROOT]	0 <CR>	Reference temperature $T = 0$.
[MENU]	NEXT GMR	
[PROMPT]	[NO]	No reference points in GMR1.
[ROOT]	0 <CR>	Reference temperature $T = 0$.
[MENU]	NEXT GMR	
[PROMPT]	[NO]	No reference points in GMR2.
[ROOT]	N <CR>	No GAP card. In the [DISPLAY]

		window, the interface is highlighted.
[ROOT]	1 <CR>	Use a BONDED interface. This acts as though the two GMRs are welded at the interface.

INPUT FOCUS	*COMMAND/DATA ENTRY*	*COMMENTS*

Still in PREPARE DATA, *the boundary conditions must be specified. There are two boundary conditions for this model. First, the wall is completely fixed. Also, there is a distributed load on the right edge of the beam. The total load there is 2000 N. However, it is specified as a traction (distributed load) in GPBEST:*

[MENU]	BCSET	
[ROOT]	WALL <CR>	Name of boundary condition set.
[ROOT]	GMR1	Boundary condition is located in GMR1. Note that this is *case-sensitive.*
[ROOT]	G <CR>	Global value.
[ROOT]	S <CR>	Selected elements.
[PROMPT]	[NO]	Do not use digitizer to select elements.
[PROMPT]	[NO]	Do not turn hidden on.
[PROMPT]	<ESC> A <CR>	Add entities.
[ROOT]	1-4 <CR>	Elements 1,2,3,4.
[ROOT]	. <CR>	Period (end input).
[ROOT]	C <CR>	In [DISPLAY] window, element 4 is highlighted. Confirm that this is correct.
[ROOT]	A <CR>	All nodes on elements 1-4.
[ROOT]	N <CR>	No time variation.
[ROOT]	D <CR>	Displacement.
[ROOT]	1 <CR>	Constrain X-direction.
[ROOT]	0 <CR>	Zero magnitude.
[ROOT]	C <CR>	Confirm.
[ROOT]	Y <CR>	Proceed to constrain Y-direction.
[ROOT]	G <CR>	Global value.
[ROOT]	N <CR>	No time variation.
[ROOT]	D <CR>	Displacement.
[ROOT]	2 <CR>	Constrain Y-direction.
[ROOT]	0 <CR>	Zero magnitude.
[ROOT]	C <CR>	Confirm.
[ROOT]	Y <CR>	Proceed to constrain Z-direction.
[ROOT]	G <CR>	Global value.
[ROOT]	N <CR>	No time variation.

[ROOT]	D <CR>		Displacement.
[ROOT]	3 <CR>		Constrain Z-direction.
[ROOT]	0 <CR>		Zero magnitude.
[ROOT]	C <CR>		Confirm.
[ROOT]	N <CR>		No more BCs in WALL BCSET.

INPUT FOCUS	*COMMAND/DATA ENTRY*		*COMMENTS*
[MENU]	BCSET		Proceed to define the distributed load (traction) at the right edge.
[ROOT]	TIP <CR>		Name of boundary condition set.
[ROOT]	GMR2		However the GMR names are listed in the [ROOT] window is how they should be typed here. In particular, pay attention to *case sensitivity*.
[ROOT]	G<CR>		Global value.
[ROOT]	S<CR>		Selected elements.
[PROMPT]	[NO]		No digitizer.
[PROMPT]	[NO]		No hidden.
[PROMPT]	<ESC> A <CR>		Add entities.
[ROOT]	29-32<CR>		Elements 29-32.
[ROOT]	. <CR>		Period.
[ROOT]	C <CR>		In [DISPLAY] window, elements 29-32 are highlighted.
[ROOT]	A <CR>		All nodes on elements.
[ROOT]	N <CR>		No time variation.
[ROOT]	T <CR>		Traction.
[ROOT]	1 <CR>		X-direction.
[ROOT]	1.25 <CR>		Magnitude. Note that this is a force per unit area. The total force is 2000 N. The dimension of the tip is 40^2 mm^2. Therefore, 2000/(40$\times$40) = 1.25 N/mm^2.
[ROOT]	C <CR>		Confirm.
[ROOT]	N <CR>		No more BCs.
[MENU]	PREP	UP	Move up one menu.
			**BCSET input has been completed.
[MENU]	EXIT		Proceed to exit BESTVIEW.
[PROMPT]	[YES]		Save this database.
[PROMPT]	[YES]		Exit BESTVIEW now.

At this point, the GPBEST data file has been created by BESTVIEW. Its name is `example4.DAT`. *Proceed to run the analysis. It should only take a few seconds to complete. After the program completes running, rename the neutral file:*

[UNIX] `< example4.DAT best-s > example4.res <CR>`

[UNIX] `mv NEUTRAL.OUT example4.neu`

8.5 PROBLEM #5

DESCRIPTION:

This example presents the process of bringing in an IGES file and subsequently meshing the model. The process is broken down into segments for ease of understanding. In this particular example, surfaces are contained in the IGES file, so they can be meshed immediately after being imported into BESTVIEW.

First of all, find the file `box1.igs`, which is in the GPBEST examples directory. Copy it into your current working directory. Now proceed with the following tutorial.

Please note that it is quite common for iges files to contain extraneous data which is not needed to build models. Text, coordinate systems, construction lines, etc. may be translated into BESTVIEW, but can be ignored or deleted if desired.

INPUT FOCUS	*COMMAND/DATA ENTRY*	*COMMENTS*
In this step, you will do the IGES translation outside of BESTVIEW.		
[ROOT]	iges <CR>	Start the IGES translator.
[ROOT]	box1.igs <CR>	Name of IGES file.
[ROOT]	0 <CR>	The IGES file was not generated in PATRAN
[ROOT]	0.001 <CR>	Equivalencing radius.
[ROOT]	A <CR>	A = Transfer all surfaces and lines.
		NOTES: The messages output by the IGES translator should help the user determine which entities were translated. When the program completes, a file `igsdata` is created, which will be read by BESTVIEW.

INPUT FOCUS	*COMMAND/DATA ENTRY*	*COMMENTS*
In this step, you will start the BESTVIEW program and read in the file `igsdata`:		
[ROOT]	bestview	Start BESTVIEW.
[PROMPT]	<ESC> example5[OK]	Name of new database.
[MENU]	DEFINE GEOM	
[MENU]	IGES	BESTVIEW reads in the `igsdata` file, which was already created.

[ROOT]	N<CR>	Do not group surfaces.
[MENU]	CDRAW	
[MENU]	VIEW-OPTIONS	
[MENU]	ROTATE	
[PROMPT]	-60, -30, -30 [OK] [OK]	Isometric viewing angle.
[MENU]	CDRAW	
[MENU]	GLOB.VIEW UP	Move up one menu.
[MENU]	DEFI UP	Move up one menu.

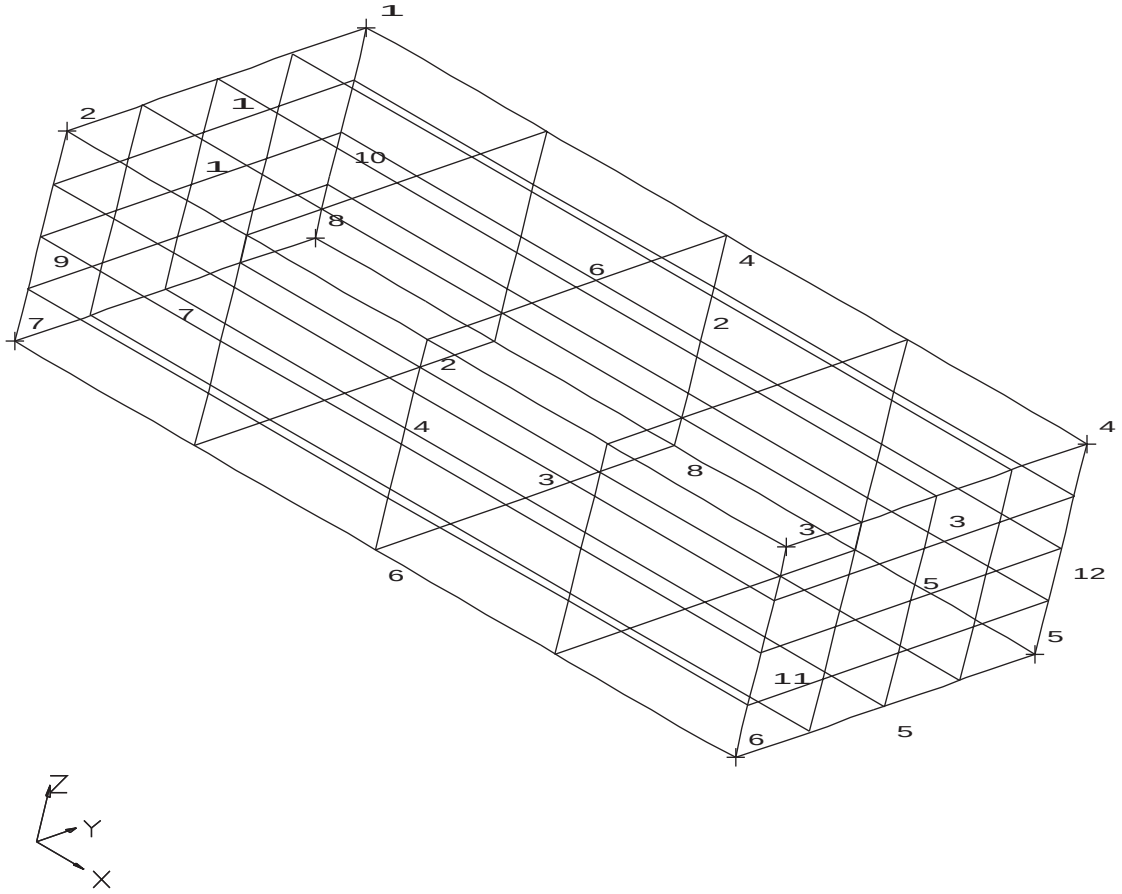

Fig. 8.5.1 Surfaces Imported via IGES Translator

INPUT FOCUS	*COMMAND/DATA ENTRY*	*COMMENTS*

Proceed to define a group and mesh the part:

[MENU]	GROUPS	
[MENU]	ADD ENTITY	
[PROMPT]	GMR1 [OK]	
[MENU]	SURFACE	
[DISPLAY]	(Pick the 6 surfaces)	Aim cursor near the middle

			of the surface, near the label.
[DISPLAY]	e		End cursor-picking.
[PROMPT]	[YES]		Save changes.
[PROMPT]	<ESC> ORANGE [OK]		
[MENU]	CDRAW		Make sure all surfaces are orange.
[MENU]	GLOB.GROU	UP	Move up one menu.
[MENU]	GENERATE MESH		
[MENU]	FAST-MESH		
[ROOT]	0.005 <CR>		A message appears in the [ROOT] window to ‘‘Give search radius.’’
[ROOT]	3 <CR>		A message appears in the [ROOT] window to ‘‘Give mesh density for patches <n>.’’ Specify three elements in each patch (surface) direction.
[MENU]	CDRAW		
[MENU]	GENE	UP	Move up one menu. The mesh has been created.

INPUT FOCUS	*COMMAND/DATA ENTRY*		*COMMENTS*
At this point, it would be helpful to display just the node and element entities:			
[MENU]	DISPLAY-OPTIONS		
[MENU]	ENTITY		
[MENU]	ALL		
[PROMPT]	[OFF]		Turn everything OFF.
[MENU]	MESH		
[PROMPT]	[ON]		Turn only MESH items ON (NODES and ELEMENTS).
[MENU]	GLOB.DISP.ENTI	UP	Move up one menu.
[MENU]	LABEL		
[MENU]	MESH		
[PROMPT]	OFF		
[MENU]	CDRAW		See [DISPLAY] window in Figure below.
[MENU]	GLOB.DISP.LABE	UP	Move up one menu.
[MENU]	GLOB.DISP	UP	Move up one menu.

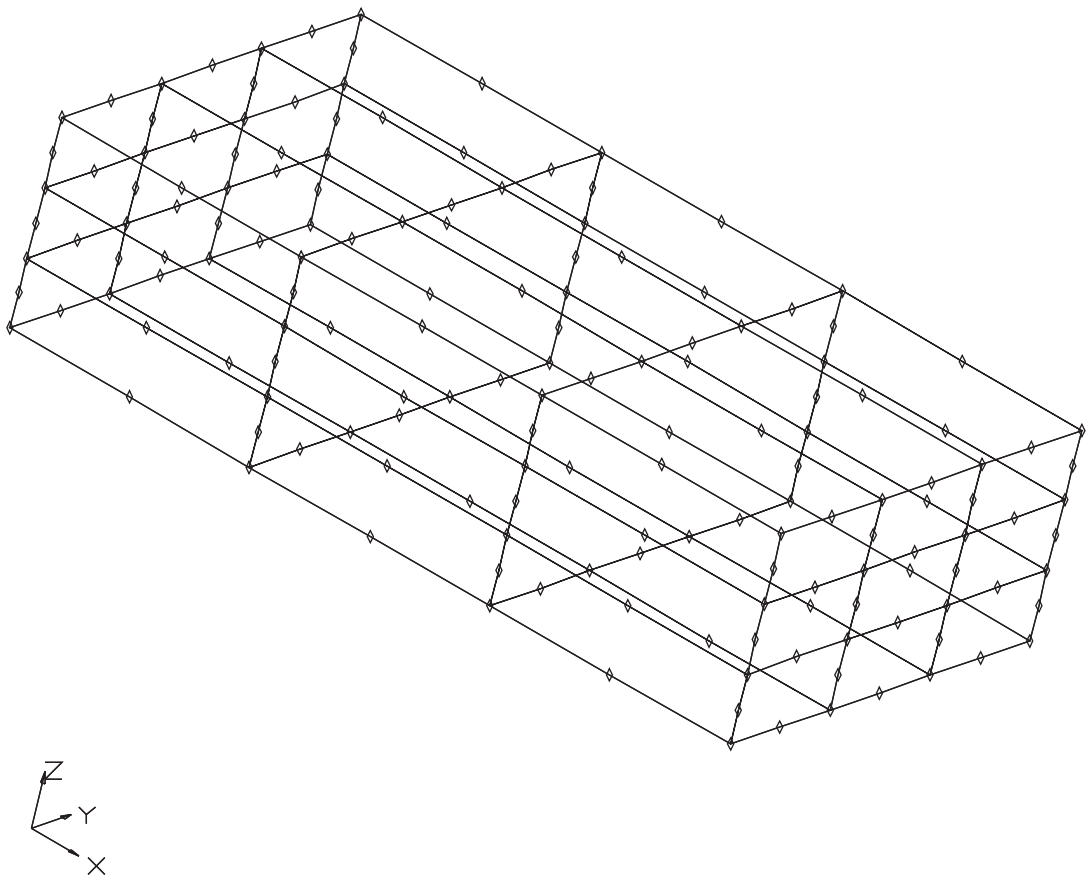

Fig. 8.5.2 Mesh Generated in BESTVIEW

8.6 PROBLEM #6

DESCRIPTION:

This is another example illustrating how to bring in an IGES file into BESTVIEW. In this particular example, surfaces are not contained in the IGES file. However, the IGES line data does define the geometry sufficiently to create the surfaces inside BESTVIEW.

First of all, find the file `box2.igs`, which is in the GPBEST examples directory. Copy it into your current working directory. Now proceed with the following tutorial.

Please note that it is quite common for iges files to contain extraneous data which is not needed to build models. Text, coordinate systems, construction lines, etc. may be translated into BESTVIEW, but can be ignored or deleted if desired.

INPUT FOCUS	*COMMAND/DATA ENTRY*	*COMMENTS*
In this step, you will start the BESTVIEW program and read in the file `box2.igs`*:*		
[ROOT]	bestview	Start BESTVIEW.
[PROMPT]	<ESC> example6[OK]	Name of new database.
[MENU]	DEFINE GEOM	
[MENU]	IGES	BESTVIEW reads in the `igsdata` file, which was already created.
[ROOT]	box2.igs <CR>	Name of IGES file.
[ROOT]	0 <CR>	The IGES file was not generated in PATRAN.
[ROOT]	0.001 <CR>	Equivalencing radius.
[ROOT]	L <CR>	L = Transfer only lines.
		NOTE: The messages output by the IGES translator should help the user determine which entities were translated.
[MENU]	CDRAW	
[MENU]	VIEW-OPTIONS	
[MENU]	ROTATE	
[PROMPT]	-60, -30, -30 [OK] [OK]	Isometric viewing angle.
[MENU]	CDRAW	
[MENU]	GLOB.VIEW UP	Move up one menu.

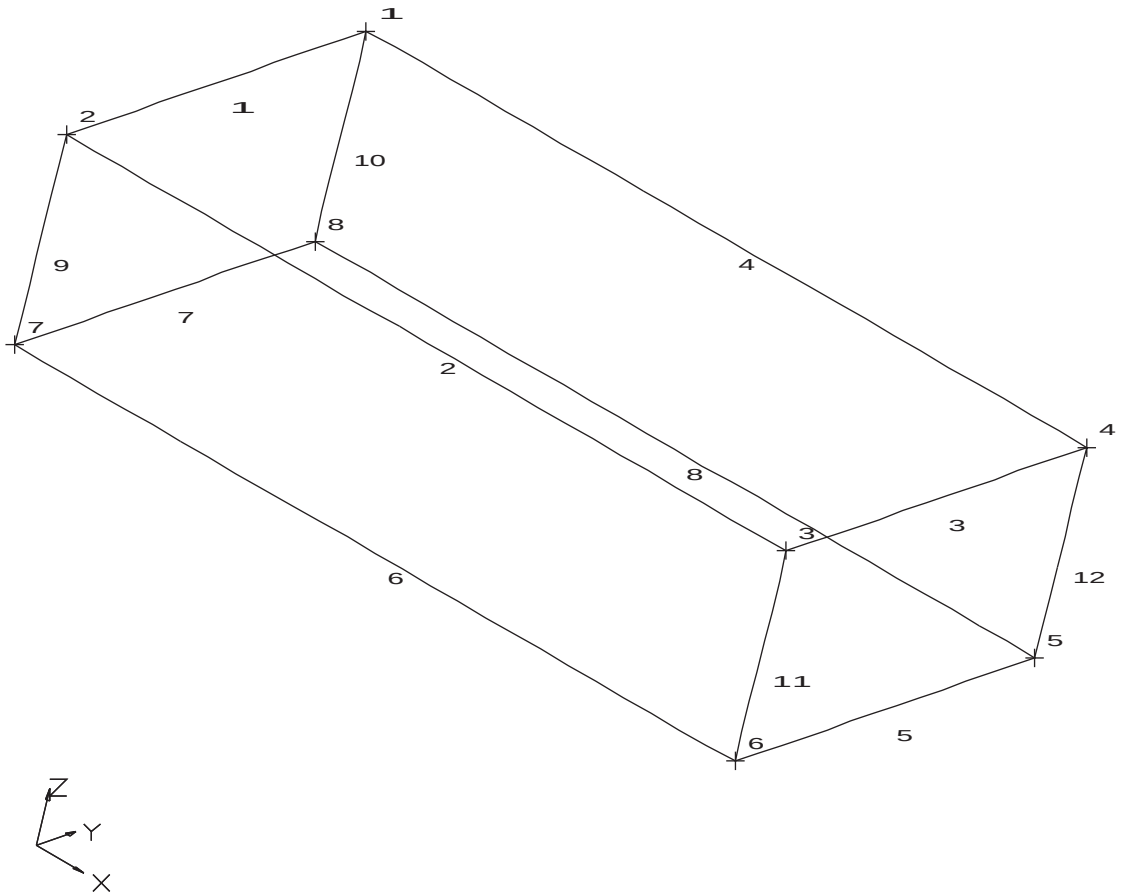

Fig. 8.6.1 Lines Imported From IGES File

INPUT FOCUS	*COMMAND/DATA ENTRY*		*COMMENTS*
Create six surfaces from the lines that were brought in via the IGES file:			
[MENU]	SURFACE		
[MENU]	FOUR-EDGES		
[PROMPT]	<ESC> 1 <CR>		Surface 1.
[DISPLAY]	Click on four edge lines which define a surface.		Surface 1.
[PROMPT]	[YES]		Accept surface.
[DISPLAY]	(Repeat previous two step for 5 other surfaces.)		Surfaces 2-6.
[DISPLAY]	a		Quit picking surfaces.
[MENU]	DEFI.SURF	UP	
[MENU]	DEFI	UP	

INPUT FOCUS	*COMMAND/DATA ENTRY*		*COMMENTS*
Proceed to define a group and mesh the part:			
[MENU]	GROUPS		
[MENU]	ADD ENTITY		
[PROMPT]	GMR1 [OK]		
[MENU]	SURFACE		
[DISPLAY]	(Pick the 6 surfaces)		Aim cursor near the middle of the surface, near the label.
[DISPLAY]	e		End cursor-picking.
[PROMPT]	[YES]		Save changes.
[PROMPT]	<ESC> OLIVE [OK]		
[MENU]	CDRAW		Make sure all surfaces are olive.
[MENU]	GLOB.GROU	UP	Move up one menu.
[MENU]	GENERATE MESH		
[MENU]	FAST-MESH		
[ROOT]	0.005 <CR>		A message appears in the [ROOT] window to ‘‘Give search radius.’’
[ROOT]	3 <CR>		A message appears in the [ROOT] window to ‘‘Give mesh density for patches <n>.’’ Specify three elements in each patch (surface) direction.
[MENU]	CDRAW		
[MENU]	GENE	UP	Move up one menu. The mesh has been created.

INPUT FOCUS	*COMMAND/DATA ENTRY*		*COMMENTS*
At this point, it would be helpful to display just the node and element entities:			
[MENU]	DISPLAY-OPTIONS		
[MENU]	ENTITY		
[MENU]	ALL		
[PROMPT]	[OFF]		Turn everything OFF.
[MENU]	MESH		
[PROMPT]	[ON]		Turn only MESH items ON (NODES and ELEMENTS).
[MENU]	GLOB.DISP.ENTI	UP	Move up one menu.
[MENU]	LABEL		
[MENU]	MESH		
[PROMPT]	OFF		
[MENU]	CDRAW		See [DISPLAY] window in Figure below.

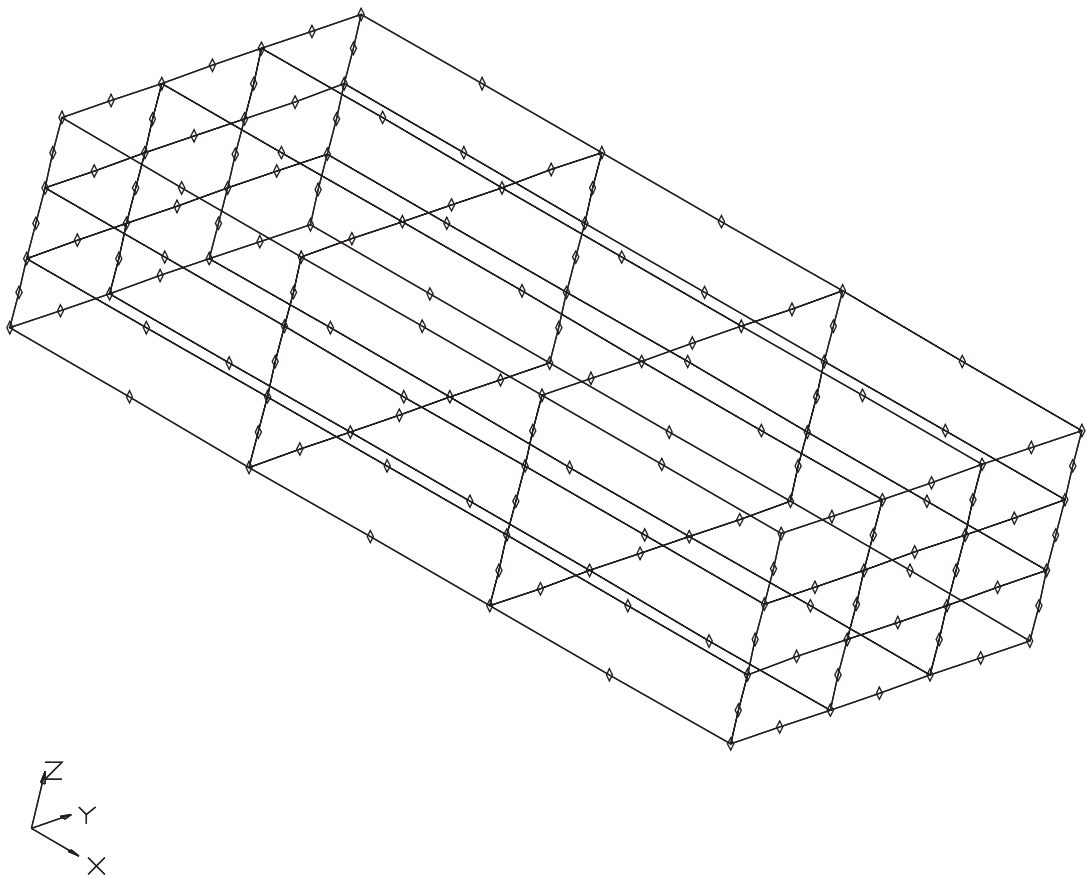

Fig. 8.6.2 Mesh Generated in BESTVIEW

8.7 PROBLEM #7

DESCRIPTION: This example illustrates how to bring in an ANSYS file into BESTVIEW. The automatic meshing capability of ANSYS has already been used to create nodes and boundary elements on a 3-D sphere.

First of all, find the file `ans_ex.cdb`, which is in the GPBEST examples directory. Copy it into your current working directory. Now proceed with the following tutorial.

INPUT FOCUS	*COMMAND/DATA ENTRY*	*COMMENTS*
In this step, you will start the BESTVIEW program and read in the ANSYS file:		
[ROOT]	bestview	Start BESTVIEW.
[PROMPT]	<ESC> example7[OK]	Name of new database.
[MENU]	SET-DIGITIZER	Turn DIGITIZER mode OFF.
[PROMPT]	[OFF]	
[MENU]	DEFINE-GEOMETRY	
[MENU]	IMPORT	Import the ANSYS file.
[ROOT]	5	Option for ANSYS R5.2.
[ROOT]	ans_ex.cdb <CR>	Name of ANSYS file.
[ROOT]	1 <CR>	3-D model.
[ROOT]	N <CR>	No symmetry.
[MENU]	CDRAW	
[MENU]	VIEW-OPTIONS	
[MENU]	ROTATE	
[PROMPT]	-60, -30, -30 [OK] [OK]	Isometric viewing angle.
[MENU]	CDRAW	

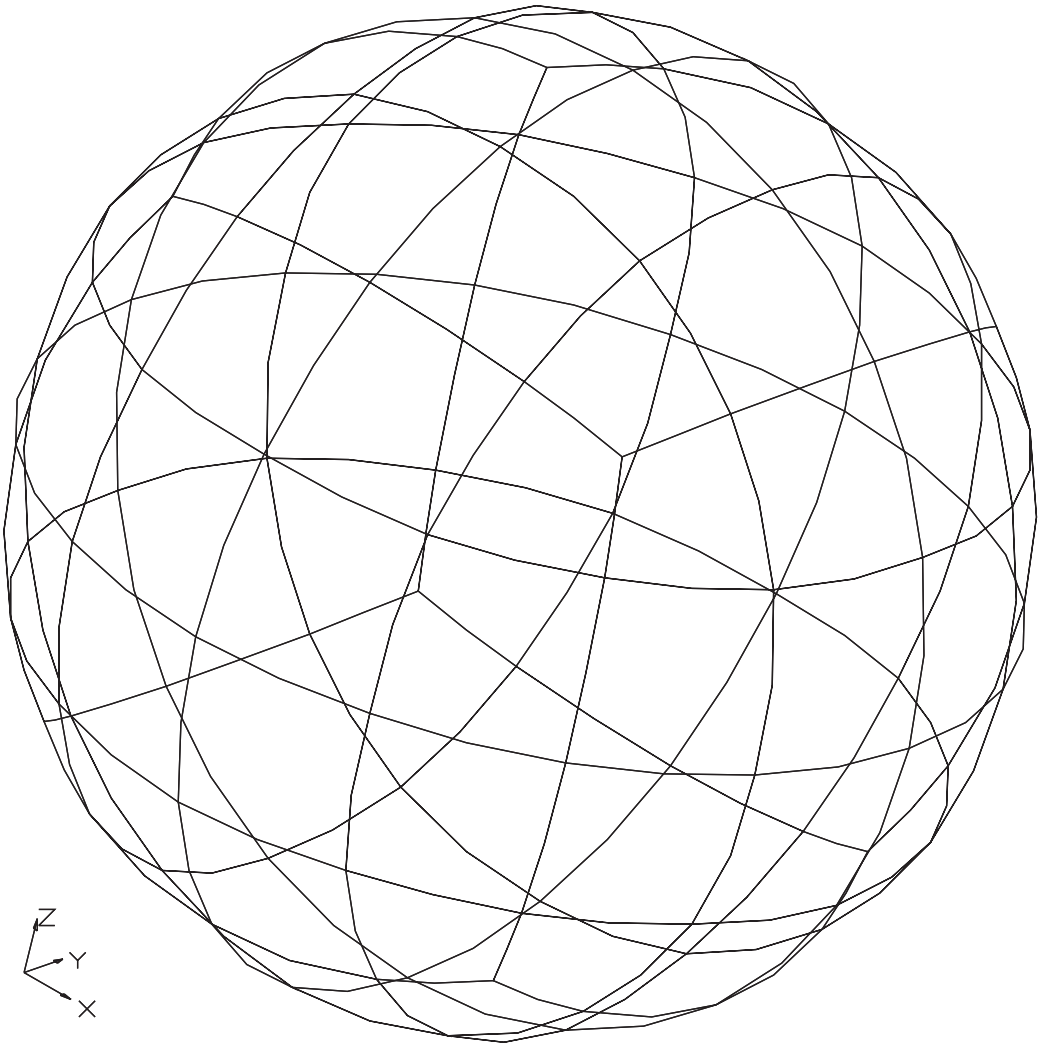

Fig. 8.7.1 ANSYS File Imported Into BESTVIEW (Elements Displayed)

9.0 GRAPHICS TRANSLATORS

SECTION **PAGE**

9.1 - Introduction . . . 9.3
9.1.1 - Translators . . . 9.4
9.1.2 - Data Flow . . . 9.5
9.2 - PREBEST Translator . . . 9.9
9.2.1 - PREBEST Files . . . 9.9
9.2.2 - Features of PREBEST . . . 9.10
9.2.3 - Element Quality Checks . . . 9.12
9.2.4 - Degree of Severity On Quality Checks . . . 9.15
9.3 - Modeling Requirements . . . 9.16
9.3.1 - Overview . . . 9.16
9.3.2 - Coordinate Systems . . . 9.17
9.3.3 - Nodes . . . 9.18
9.3.4 - Elements . . . 9.19
9.3.5 - Materials . . . 9.24
9.3.5.1 - Defining Material Properties . . . 9.24
9.3.5.2 - Assigning Material Properties . . . 9.24
9.3.6 - Element Properties . . . 9.26
9.3.6.1 - GMR Partitioning . . . 9.26
9.3.6.2 - Surface Partitioning . . . 9.27
9.3.7 - GMRs (GROUPs) . . . 9.32
9.3.7.1 - Modeling Inelastic Regions . . . 9.33
9.3.7.2 - Construction Groups . . . 9.35
9.3.7.3 - Summary of Group Name Rules . . . 9.35
9.3.8 - Interfaces Between GMRs . . . 9.36
9.3.8.1 - General Remarks . . . 9.36
9.3.8.2 - Functional Variation Across Interfaces . . . 9.37
9.3.8.3 - Entity Numbering at Interfaces . . . 9.40
9.3.8.4 - Cyclic-Symmetry Interfaces . . . 9.44
9.3.9 - Sampling Surfaces . . . 9.46
9.3.10 - Sampling Points . . . 9.49
9.3.11 - Symmetry . . . 9.51
9.3.12 - Boundary Conditions . . . 9.52
9.3.13 - Body Forces . . . 9.58
9.3.14 - Other Modeling Considerations . . . 9.59
9.4 - POSTBEST Translator . . . 9.60
9.4.1 - POSTBEST Files . . . 9.60
9.4.2 - Renumbering Entities . . . 9.61
9.4.3 - Nodal Tractions . . . 9.62

SECTION **PAGE**

9.4.4 - GPBEST Data File Considerations 9.64
9.4.5 - GPBEST Results 9.65
9.4.6 - Controlling Result Output 9.69
9.5 - PATRAN 9.70
9.5.1 - PREBEST Using PATRAN 9.71
9.5.1.1 - Supported PATRAN Neutral File Packets 9.71
9.5.1.2 - Supported PATRAN Elements 9.72
9.5.1.3 - Modeling Geometry in PATRAN 9.74
9.5.1.4 - Modeling Boundary Conditions in PATRAN 9.75
9.5.2 - POSTBEST Using PATRAN 9.77
9.5.2.1 - PATRAN Result Files 9.77
9.5.2.2 - PATRAN-3 Result Template Files 9.83
9.6 - I-DEAS 9.90
9.6.1 - PREBEST Using I-DEAS 9.91
9.6.1.1 - Supproted I-DEAS Universal File Blocks 9.91
9.6.1.2 - Supported I-DEAS Elements 9.91
9.6.1.3 - Modeling Geometry in I-DEAS 9.94
9.6.1.4 - Scaling of Dimensions in I-DEAS 9.96
9.6.2 - POSTBEST Using I-DEAS 9.97
9.6.2.1 - I-DEAS Results 9.97
9.7 - HYPERMESH 9.102
9.7.1 - PREBEST Using HYPERMESH 9.102
9.7.1.1 - Supported HYPERMESH Neutral File Packets 9.102
9.7.1.2 - Supported HYPERMESH Elements 9.103
9.7.1.3 - Modeling Geometry in HYPERMESH 9.105
9.7.1.4 - Modeling Boundary Conditions in HYPERMESH 9.107
9.7.2 - POSTBEST Using HYPERMESH 9.108
9.7.2.1 - HYPERMESH Result Files 9.108
9.8 - FEMAP 9.109
9.8.1 - PREBEST Using FEMAP 9.109
9.8.1.1 - Supported FEMAP Neutral File Blocks 9.109
9.8.1.2 - Supported FEMAP Elements 9.110
9.8.1.3 - Modeling Geometry in FEMAP 9.113
9.8.1.4 - Modeling Boundary Conditions in FEMAP 9.114
9.8.2 - POSTBEST Using FEMAP 9.115
9.8.2.1 - FEMAP Results 9.115

9.1 INTRODUCTION

This chapter discusses the various graphics systems (also known as ‘‘modeling programs’’) and translators that are currently available to interact with GPBEST. Previous chapters in this manual have discussed how BESTVIEW can be used to interface with the GPBEST program. However, many users feel more comfortable using their own modeling programs and do not feel the need to learn a new graphics program. The PREBEST and POSTBEST translators have been provided to meet these needs. PREBEST is associated with the pre-processing (model-building) phase, while POSTBEST is associated with post-processing (results visualization).

9.1.1 TRANSLATORS

PREBEST is used to translate neutral files from modeling programs to create a GPBEST data file that can be used as input to the GPBEST program. The POSTBEST program is used to translate GPBEST results into files that can be imported from the user's modeling program. Thus, the user can do all pre-processing and post-processing in their modeling program while using GPBEST as the boundary element solver.

Currently, the PREBEST and POSTBEST translators support the following popular modeling programs: PATRAN, I-DEAS, FEMAP and HYPERMESH. In addition, since a documented GPBEST neutral file format is available (see chapter 10 of the BESTVIEW User's Manual), users can easily write translation programs to interface with their own favorite modeling program. Additional translators to other popular graphics and analysis programs such as PRO/ENGINEER, ANSYS, ABAQUS and MSC-NASTRAN are planned in the future.

The current release of PREBEST and POSTBEST support the following versions of the modeling programs. The user must make the appropriate selection for their program:

<1> PATRAN 2
<2> IDEAS VI
<3> PATRAN R3-R7
<4> IDEAS MS R1-R2
<5> IDEAS MS R3-R6
<6> HYPERMESH 2.1
<7> FEMAP R5-6

The PATRAN 2, IDEAS VI, and IDEAS MS R1-2 options are considered outdated at this point in time. They are merely retained in the translators for users who still use these versions of the modeling programs. Future updates for these options will not be supported.

9.1.2 DATA FLOW

This section describes the flow of data from various file formats and programs to other file formats and programs. Since there are many programs (GPBEST, BESTVIEW, PREBEST, POSTBEST, PATRAN, I-DEAS, FEMAP and HYPERMESH) and many kinds of files (data files, neutral files, IGES files, etc.) involved in this procedure, it is useful to determine how to get from one file type to another. Note that the GPBEST USER'S MANUAL (Volume I), Section 6.2, contains a more complete list of the data flow. It includes descriptions of how other graphics programs, such as PRO/ENGINEER, interface with the GPBEST system.

GPBEST Data File to PATRAN, I-DEAS, FEMAP or HYPERMESH

To convert a GPBEST data file into a format for displaying the mesh in PATRAN, IDEAS, FEMAP or HYPERMESH, the POSTBEST translator is used. However, the GPBEST data file cannot be read directly by POSTBEST; so an intermediate step must be performed to create a GPBEST neutral file.

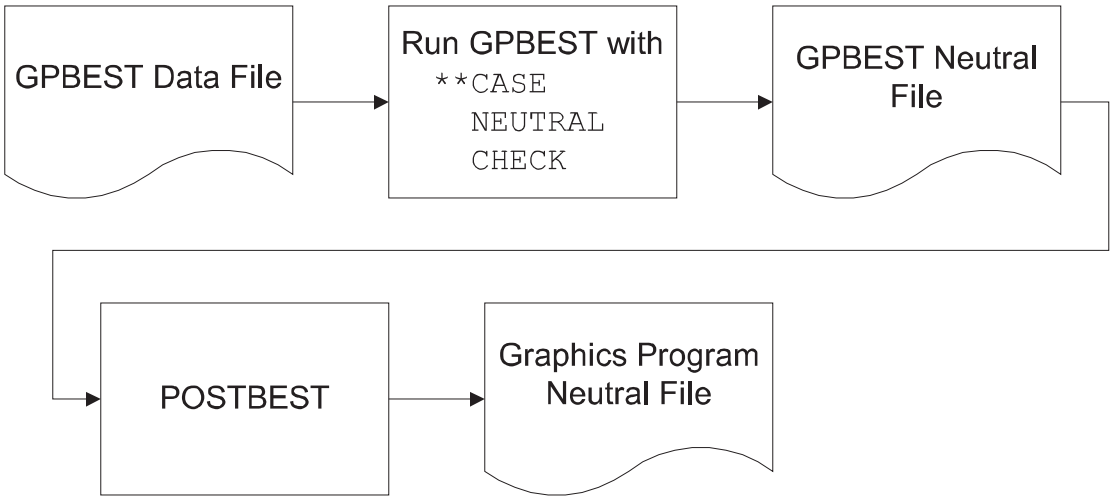

PATRAN, I-DEAS, FEMAP or HYPERMESH to GPBEST Data File

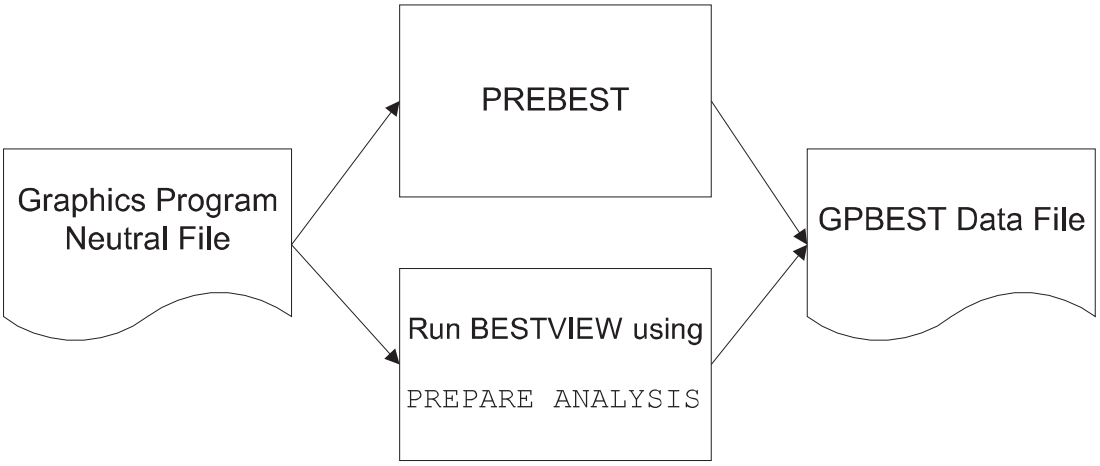

PATRAN, I-DEAS, FEMAP or HYPERMESH to GPBEST Neutral File

Once the GPBEST data file is available, a GPBEST job can be run to create a GPBEST neutral file.

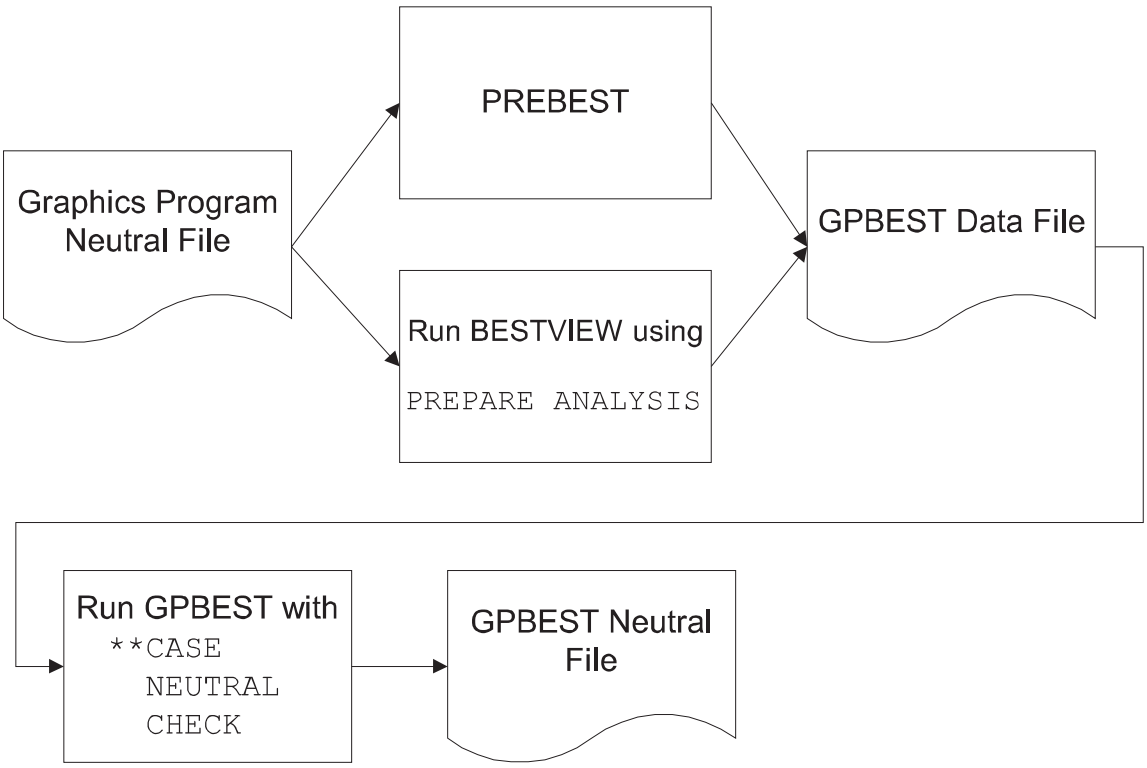

GPBEST Neutral File to GPBEST Data File

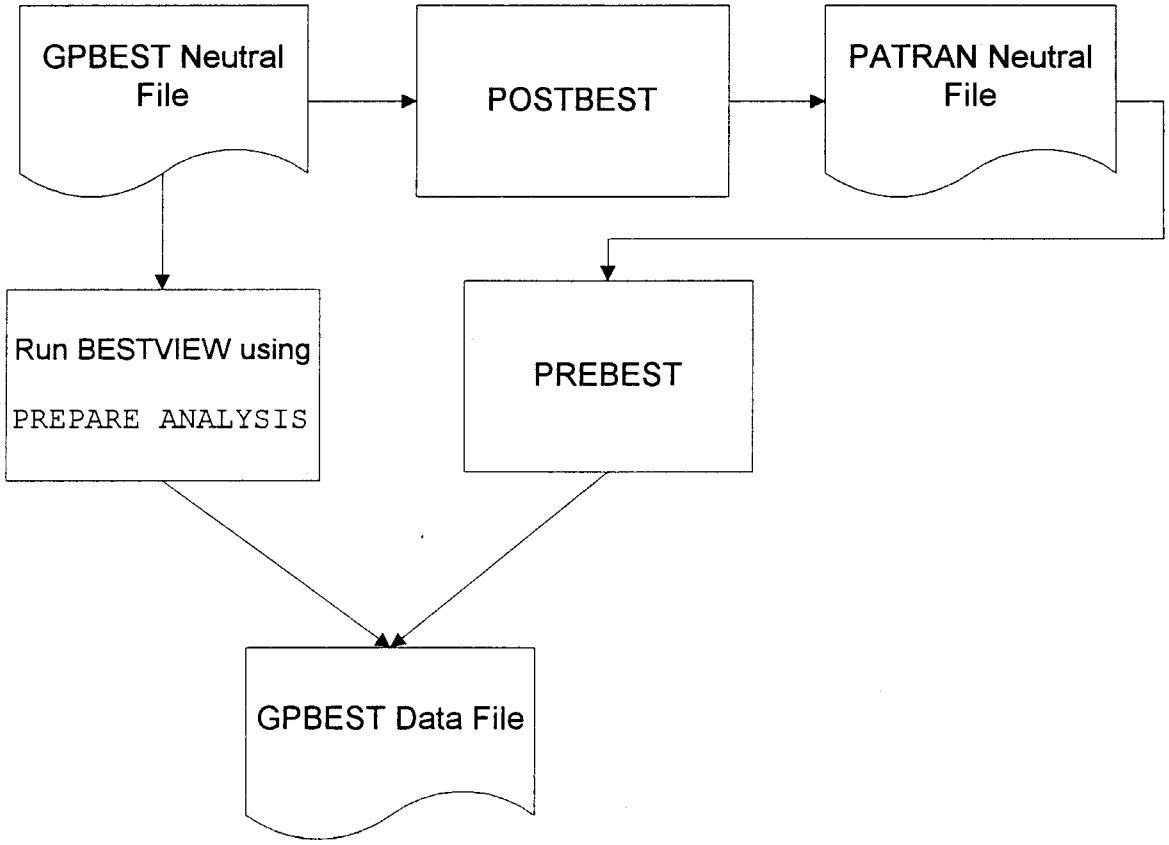

9.2 PREBEST TRANSLATOR

Most users are already familiar with a commercially available graphics (modeling) package. If the user wishes to use such a package as a pre-processor to GPBEST, they must make use of the PREBEST translator. In the present version, translators are provided for PATRAN, I-DEAS, FEMAP and HYPERMESH, which are very popular finite element modeling programs.

9.2.1 PREBEST FILES

PREBEST requires a neutral file from the user's modeling program as input. To begin a PREBEST session, enter **`prebest`** at the system prompt. If the GPBEST system has been installed correctly, the operating system will be able to locate this program. PREBEST then asks the user some questions. The user's answers help the program to translate the model data into the correct GPBEST data file.

PREBEST generates three output files:

1. A GPBEST data file, which contains the nodes, elements, GMRs, materials, boundary conditions, etc.
2. A log file containing a running log of all PREBEST processing information. Before executing GPBEST, the user should check for any warning or error messages in the log file.
3. A session file, which can be used to rerun a PREBEST job in a batch mode.

If the user must re-execute PREBEST on the same problem, the session file can be utilized. The session file merely records the answers that the user types in at the console during a PREBEST session. The session file can be reused as an input file for subsequent PREBEST sessions, provided that all the interactive input for the subsequent sessions are the same as the previous session.

To take advantage of the session file, the user must first rename it and then re-execute PREBEST. The following is an example of how it could be done for a PATRAN problem in a UNIX environment:

<u>Step 1</u>:

```
patbest.ses  pat2.ses
```

<u>Step 2</u>:

```
<pat2.ses  prebest> pat2.prt
```

All the questions and information that normally would appear on the screen are now stored in the pat2.prt file. This is a very efficient way to rerun PREBEST on the same problem. Also, there is less likelihood of making mistakes using this procedure rather than having to answer questions repeatedly.

9.2.2 FEATURES OF PREBEST

1. Automatic Element Normal Reversal

   As is the case with creating finite element models, the element directions must be properly defined in GPBEST models. This means that all the elements in a GMR must have consistent directions (clockwise, counter-clockwise, right-hand rule, etc.). See the NORMal card description in Section 5.3 of the GPBEST User's Manual.

   PREBEST relieves the user of some of the tedium associated with normal definitions. It will check every element in every GMR to make sure that they have consistent normal directions. If elements are found to have inconsistent directions, PREBEST automatically flips them around.

   Be aware that the automatic normal direction routines in PREBEST can have implications in the direction that boundary conditions act. If these (flipped) elements should have boundary conditions defined upon them, their boundary condition (or load) directions are *not* flipped, i.e., their sign (+/-) is not reversed. Therefore, it is recommended that the user checks the element normal directions in the modeling program and adjusts them accordingly before applying boundary conditions.

   The automatic normal reversal also works for exterior regions, for GMRs with multiple disjoint surfaces, and for 2-D and 3-D problems. See Section 5.3 of the GPBEST User's Manual for more information on these features.

2. Area and Volume Calculations

   PREBEST calculates areas and volumes for each GMR as well as for the entire model. This information gives the user a powerful tool for verifying the model because it becomes possible to check the weight and volume of the component and compare them with what the model predicts. It is strongly recommended that users regularly make use of this information, especially when working with a new model.

3. Extensive Error Checking

   The PREBEST program performs extensive error checking to insure that models will run properly in GPBEST. It is strongly recommended that users pay attention to any warning messages that are written to the console and to the log file.

4. Use of ''ALL'' to Simplify Input

   The keyword ''ALL'' can be used to answer repetitive questions in PREBEST. For instance, in order to use material 5 in all remaining GMRs, simply answer ''5 ALL'' when prompted by PREBEST. In doing so, material 5 would be applied to all remaining GMRs without PREBEST needing to ask the user.

   A similar ALL capability exists for defining the interface type. For instance, in order to use BONDED in all remaining interfaces, simply answer ALL when prompted by PREBEST. In doing so, the BONDED condition will be applied to all remaining interfaces without PREBEST asking the user.

This ALL capability can greatly reduce the PREBEST user input, particularly for large models.

9.2.3 ELEMENT QUALITY CHECKS

For 3-D problems, the three-sided and four-sided shell elements are checked in five different tests. Elements that fail these tests are listed in the log file. The user is thus forewarned about the model before attempting to run the problem through GPBEST. Under such a situation, it is advisable that corrections be made to the model. This may eventually save time.

1. Internal Angle Check

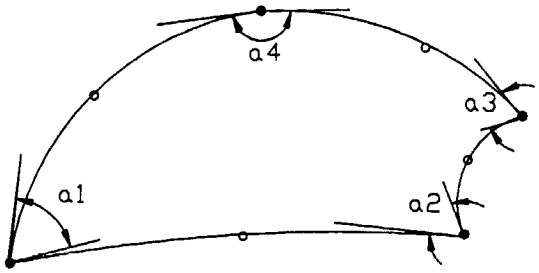

Minimum Angle :

Minimum of a1, a2, a3 and a4

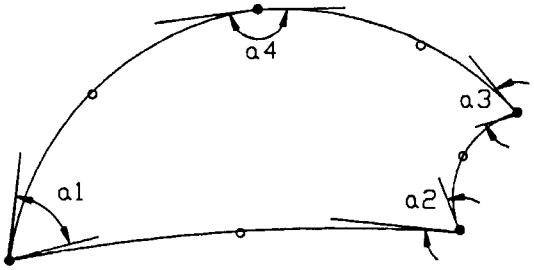

Maximum Angle :

Maximum of a1, a2, a3 and a4

Elements which are extremely skewed or distorted are detected in this test. Tangent vectors are constructed at the corners of the elements in the direction of the two adjacent sides. The angle between these vectors is defined as the internal angle at the corner. The maximum allowable value for both triangles and quadrilaterals is 165°. It is recommended that the minimum angle be 5° for triangular elements and 15° for quadrilaterals.

2. Warping Angle Check

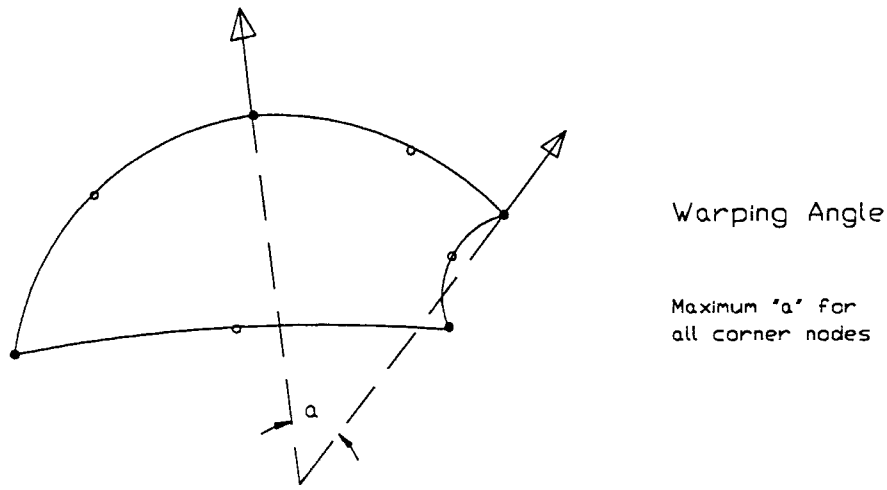

This test helps to identify elements that are curved excessively off the plane of the element or twisted in space. Normal vectors are constructed at the corners of the elements. The maximum angle between any two of these normal vectors is the warpage angle. A value of less than 90° is recommended.

3. Midnode Tangent Offset Test

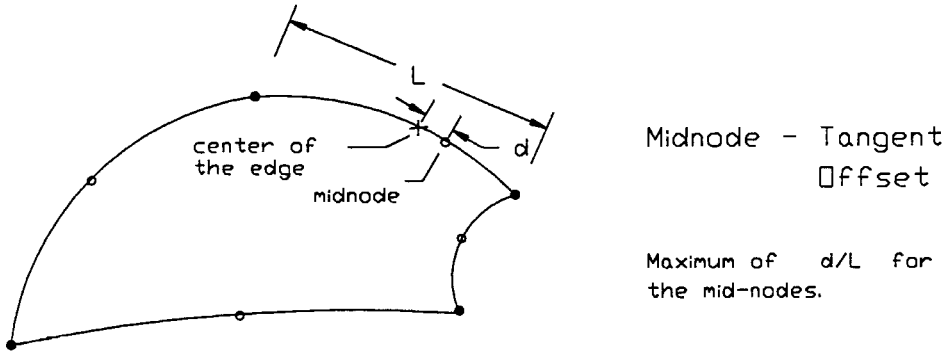

This test is applicable to both quadrilateral and triangular elements of quadratic order only (i.e., elements with mid-side nodes). It tests the deviation of the mid-side node from the mid-edge position of the element. An offset value of less than 0.25 is recommended. However, this offset value can be 0.25 for D&T Fracture elements, normally referred to as quarter-point elements.

4. <u>Midnode Normal Offset Test</u>

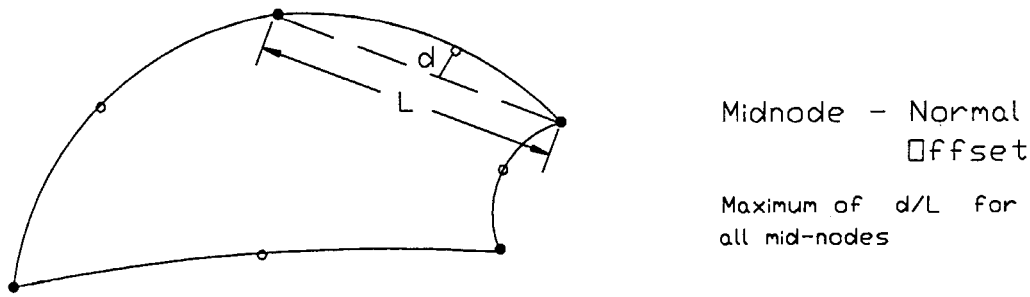

This test is applicable to both quadrilateral and triangular elements of quadratic order only (i.e., elements with mid-side nodes). It tests the deviation of the mid-side node from the mid-node position for an element edge with no curvature. The offset distance is the perpendicular projection of the mid-side node on the straight edge. A value of less than 0.25 is recommended.

5. <u>Jacobian Ratio Test</u>

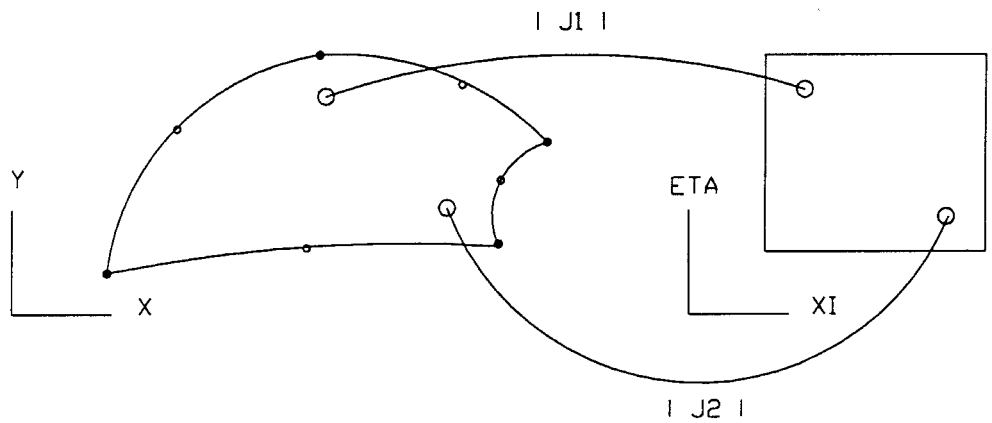

Jacobian Ratio :

$$\text{Max} \frac{|J1|}{|J2|}$$

The ratio of maximum determinant of Jacobian to the minimum determinant of the Jacobian is reported. Elements with a value of greater than 10.0 are not desirable, although this is highly problem-dependent.

9.2.4 DEGREE OF SEVERITY ON QUALITY CHECKS

During the execution of PREBEST, the user is given the option of selecting a severity level for the element quality check. The options are VERY LOW, LOW, MED, and HIGH, and are listed in Table 9.2.4.1

Based on our own experience and feedback from users, it is expected that a quality criteria of LOW is good enough to produce reasonable results in most situations. Therefore, this is the default in PREBEST. However, a mesh meeting the requirements of a HIGH criteria will produce more accurate results. The choice of the level depends on the amount of time and effort the user is willing to spend tweaking the model. It must be emphasized that these criteria for GPBEST models are more tolerable than most of the well-known finite element programs due to the superior performance of GPBEST elements.

Table 9.2.4.1 Criteria For Quality Checks

	A	B	C	D	E	F
VERY LOW	175.0	2.0	5.0	120.0	0.25	30.0
LOW	165.0	5.0	10.0	90.0	0.25	10.0
MED	155.0	10.0	15.0	80.0	0.15	8.0
HIGH	145.0	15.0	20.0	70.0	0.10	6.0

A - Maximum internal angle
B - Minimum internal angle for triangles
C - Minimum internal angle for quadrilaterals
D - Maximum warping angle
E - Maximum tangent or normal offset for mid-nodes
F - Maximum Jacobian ratio

9.3 MODELING REQUIREMENTS

9.3.1 OVERVIEW

This section documents in detail how to model various entities for subsequent GPBEST analysis. It is extremely important to become very familiar with this information.

Many of the requirements given here are independent of which modeling program is being used. Hence, they are general recommendations. Where a feature is not supported by a particular modeling program, this will be highlighted either in this section or in the later sections which describe the program-specific details.

9.3.2 COORDINATE SYSTEMS

For the most part, users can perform most of their modeling in the standard global X-Y-Z coordinate system. This is the coordinate system used by GPBEST. However, there may arise occasions where it is more convenient to model in another coordinate system which may be translated and/or rotated.

The PREBEST program will translate nodal coordinates that are referenced to another rectangular coordinate system into the global X-Y-Z coordinate system. However, be aware that nodes can *only reference one coordinate system* in addition to the global X-Y-Z coordinate system.

Also note that although GPBEST supports cylindrical coordinate systems, the PREBEST translator does not. For example, if nodes are referenced to rectangular coordinate system CORD1 which is defined in global X-Y-Z, then PREBEST will convert the nodal coordinates properly. However, if nodes are referenced to CORD1 which is defined in a different coordinate system (CORD2) which is subsequently defined in global X-Y-Z, PREBEST *will not* convert the nodal coordinates properly.

In constructing 2-D and axisymmetric models, care must be taken to use the proper axes. For 2-D and axisymmetric problems, use the X-Y plane. The Z-coordinates of all nodes should be zero.

In the case of axisymmetric problems, X corresponds to the radial direction, Y corresponds to the axial direction, and Z corresponds to the circumferential direction. However, the Z-coordinates of all nodes should be zero.

When working with a cyclic symemtry model, the axis of revolution can be in any direction, although it is conventional to use the Z-axis as the axis of revolution. ‘‘Side A’’ and ‘‘Side B’’, which define the cyclic interfaces, do not need to be planar. The nodes and elements on Side A must be able to be rotated around an axis to match up with entities at Side B.

9.3.3 NODES

Nodes are defined for GPBEST analysis in a manner similar to how they are defined for finite element analysis. In GPBEST terminology, they are called ''POINTS.'' Nodes are usually defined in the global X-Y-Z coordinate system, although they can optionally reference another rectangular coordinate system.

POINTS in GPBEST can be used to define boundary points, volume points, sampling points, etc. Their usage is determined by how they are GROUPed in the modeling program. See the following Section for a detailed description of GROUPs.

Be very careful about checking for coincident nodes in modeling programs. Sometimes finite element users will merely combine all coincident nodes blindly. However, this should not be done with GPBEST models.

GPBEST users should check for and combine coincident nodes using one GROUP at a time. This is because at interfaces between GMRs, there will be nodes and elements that are coincident. If the user blindly collapsed all coincident nodes, they would destroy the unique node and element numbers at all interfaces. However, if the coincident node checking is performed on one GROUP (GMR) at at time, there will not be a problem with this. Refer to Section 9.3.8.3 in this manual for more information about nodes at interfaces.

9.3.4 ELEMENTS

Meshing a problem for GPBEST analysis is somewhat similar to meshing a problem for finite element analysis. The user can take advantage of advanced mesh generator features in their modeling program. For instance, in order to mesh directly from solid models, ‘‘PAVER’’ in PATRAN-3, automatic ‘‘FREE MESH’’ in I-DEAS, or the ‘‘AUTOMATIC MESH GENERATION’’ feature in FEMAP and HYPERMESH can be used. However, elements created in this manner need to be checked for poor aspect ratios and warping before these are input into PREBEST. Refer to Section 9.2.3, which discusses the various element checks that are performed by PREBEST. It may help to perform element checking in the modeling program before running the PREBEST translator.

‘‘Elements’’ in GPBEST can refer to boundary surface elements, interior volume cells, sampling surface elements, or line (hole) elements. How they are translated depends on the dimensionality of the problem (2-D or 3-D) and how they are GROUPed in the modeling program.

Unlike finite elements, the elements used for modeling a boundary element problem are one less in the order of dimensions. This means that for a 3-D problem, conventional 2-D finite elements must be used, which are frequently referred to as ‘‘shell elements.’’ Likewise, a 2-D problem must be modeled using conventional 1D finite elements, which are usually referred to as ‘‘beam elements.’’ Therefore, in order to be consistent with boundary element terminology, henceforth, the shell and beam elements are referred to as 3-D and 2-D elements respectively.

Figure 9.3.4.1 illustrates the standard (beam) elements used to model the boundary surfaces in 2-D and axisymmetric problems. These same elements are used to model lines or holes in 3-D problems.

Figure 9.3.4.2 illustrates the standard (shell) elements used to model the boundary surfaces in 3-D problems. These same elements are used to model volume cells in 2-D problems.

Figure 9.3.4.3 illustrates the standard (volume) elements used to model internal volume cells in 3-D problems. These elements cannot be used in 2-D models.

Figures 9.3.4.1, 9.3.4.2 and 9.3.4.3 illustrate the nodal connectivity used by GPBEST. It, coincidentally, is the same connectivity used by the I-DEAS program. However, PATRAN, FEMAP and HYPERMESH use different nodal connectivities. The PREBEST translator will properly translate all nodal connectivities into GPBEST format.

Note the following aspects of element modeling:

1. Not all elements shown here are available in each modeling program. Consult the user manual for your particular modeling program to determine which elements are available. Also, the program-specific sections later in this Chapter can be used as a reference.
2. It should be emphasized that GPBEST *geometry* should *always* be quadratic (i.e., BAR-3, QUAD-8, etc.) However, the *functional variation* on elements can be linear or quadratic.

Use only quadratic elements for modeling the geometry of elements, even if their functional variation will be linear.

3. Boundary elements should have property IDs and material IDs assigned to them, in accordance with the directives given later in this Chapter.

GPBEST Element Types

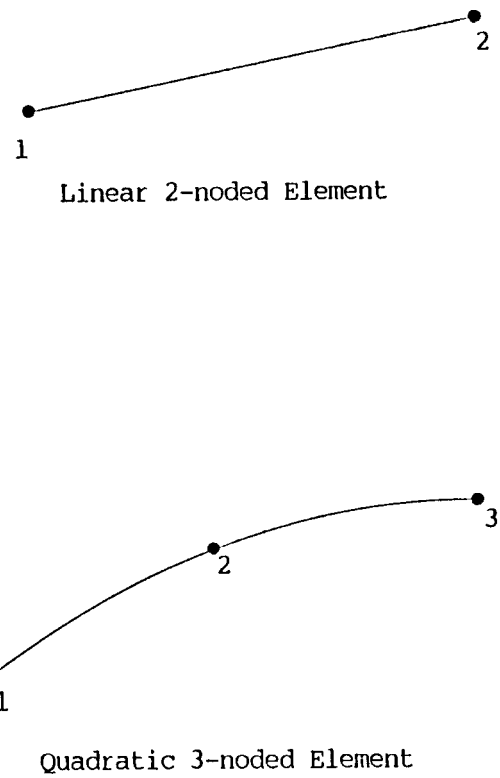

Figure 9.3.4.1 Two-Dimensional (Surface) Boundary Elements
or Three-Dimensional Line Elements

GPBEST Element Types

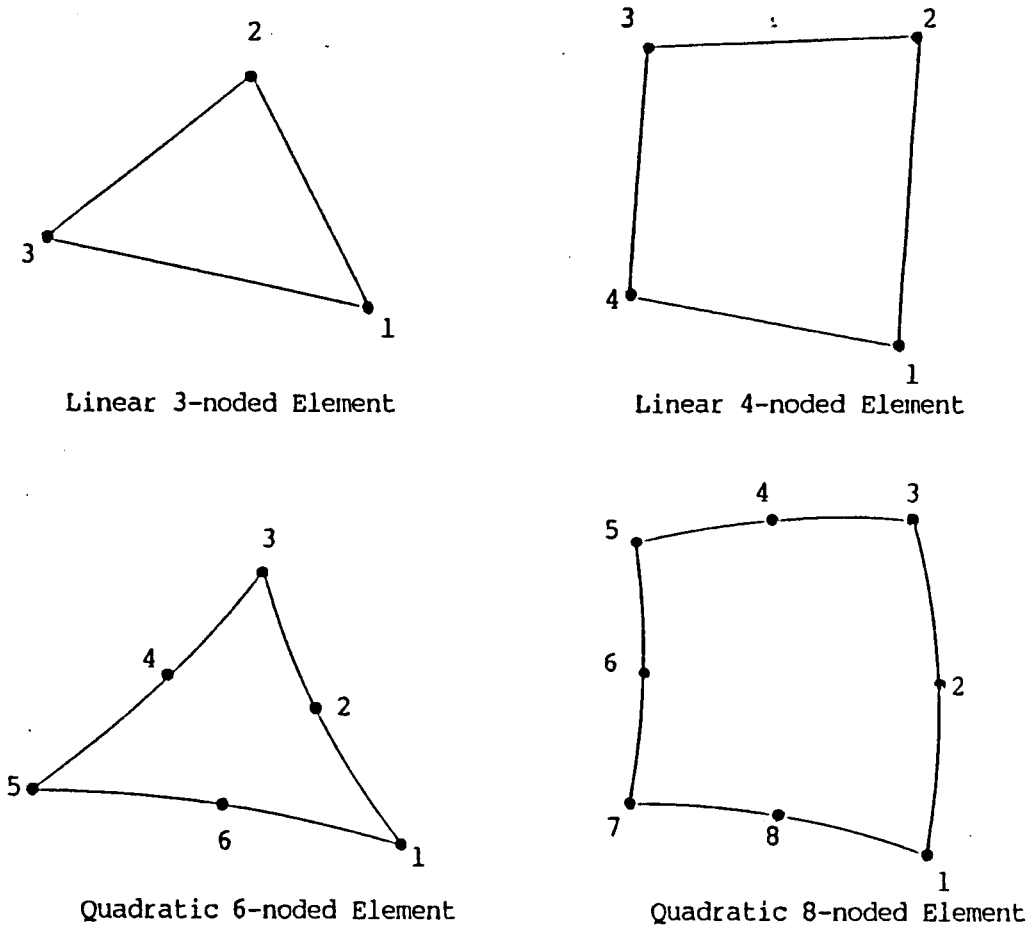

Figure 9.3.4.2 Three-Dimensional (Surface) Boundary Elements
or Two-Dimensional Volume Cells

GPBEST Element Types

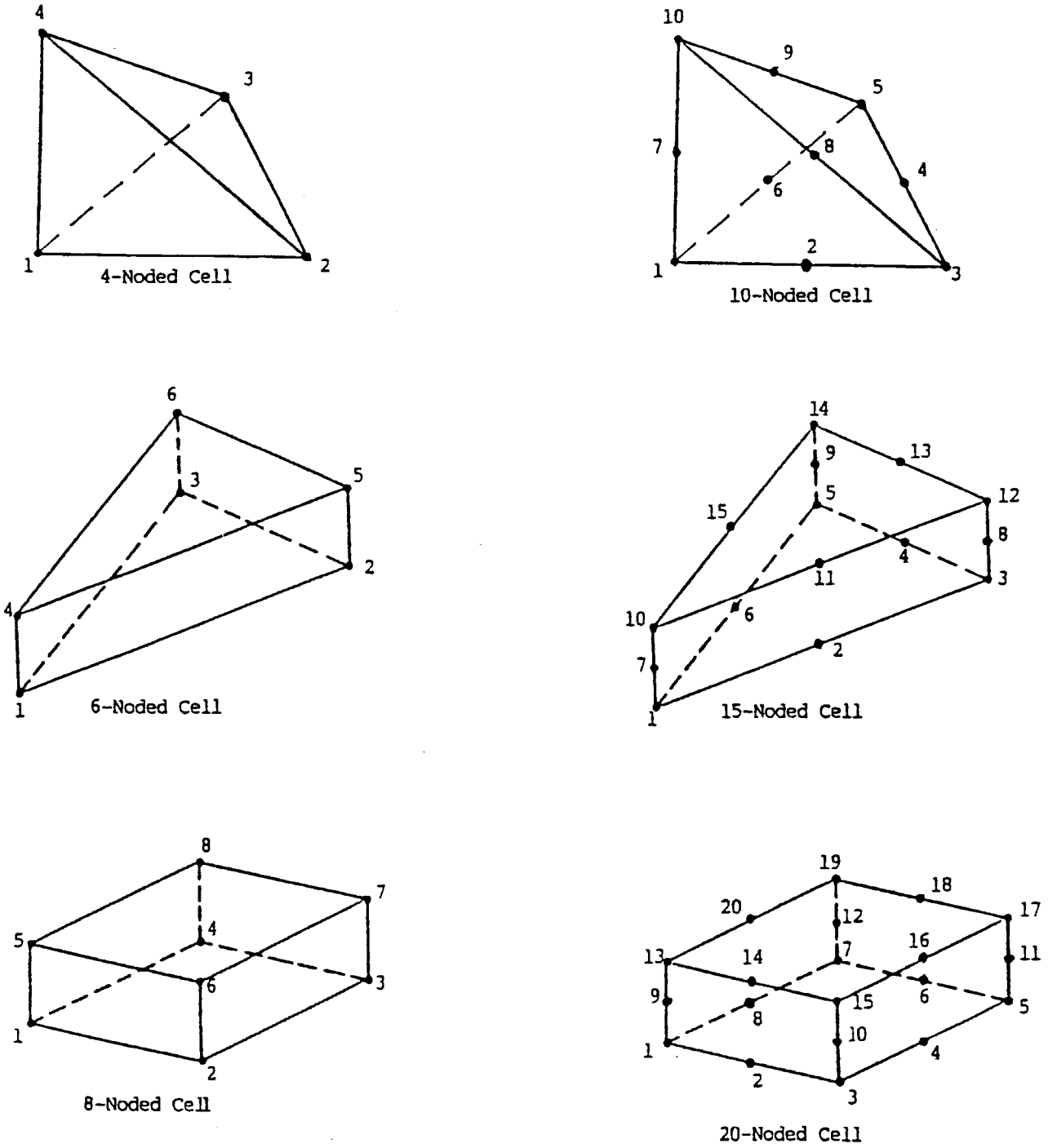

Figure 9.3.4.3 Three-Dimensional Volume Cells

9.3.5 MATERIALS

There are two aspects that should to be considered regarding material properties: 1) defining the material properties themselves, and 2) assigning material properties to elements (and subsequently to GMRs).

9.3.5.1 DEFINING MATERIAL PROPERTIES

PREBEST allows the user to define material properties in the modeling program. PREBEST will translate isotropic, orthotropic, and anisotropic material constants. Multiple materials can be defined for use in various GMRs.

It is advisable to check the **MATERIAL blocks in the resulting GPBEST data file to make sure that the material properties were translated properly by PREBEST. Not all material constants supported by GPBEST are supported in each modeling program. Check your modeling program's User Manual to see which properties are supported.

If the user does not define any material information in the modeling program, then PREBEST includes a set of standard properties for an isotropic material. After the PREBEST session is completed, the GPBEST data file must be edited to change the material properties. For most analyses, only a few cards are required in the **MATERIAL block in the data file.

9.3.5.2 ASSIGNING MATERIAL PROPERTIES

Most users are familiar with assigning material properties to elements for finite element analysis. Depending on the program being used, material IDs can be referenced by each element directly, or material IDs can be referenced by property cards, which are subsequently referenced by each element. Either way, a material ID is defined for each element, and material ID can vary from element to element.

GPBEST users must assign material IDs to GMRs. Elements making up a GMR cannot reference different material properties. *Each GMR can reference only one material.* Therefore, caution must be exercised in assigning material IDs to elements.

It is recommended to assign material IDs to elements in the modeling program. If this is done, the materials are automatically assigned to the appropriate GMRs. This minimizes the number of questions that must be answered when running the PREBEST program. User error is common when processing large boundary element models due to having to answer many repetitive questions. By defining materials and assigning them in the modeling program, the material assignments can be graphically checked.

Assigning Material IDs to Elements

1. Materials with IDs 1-9 will be ignored as far as assigning material properties to GMRs. If any boundary element in the model has a material ID 1,2,3,4,5,6,7,8 or 9 assigned to it, this automated capability will not work. Thus, in this case, PREBEST will prompt the user to assign materials to each GMR.
2. In order to use properties to assign element type and functional variation and material IDs to assign GMR materials, be sure to use material *and* property IDs greater than 9.
3. Some modeling programs assign material IDs directly to elements, while some assign them indirectly through a property reference. Both methods are supported by PREBEST.
4. Only one material can be assigned to a single GMR. Therefore, if PREBEST detects several material IDs associated with elements in a single GMR, the automatic GMR material assignment will be disabled. Thus, PREBEST will prompt the user to assign materials to each GMR manually.
5. For the automatic material assignment capability to work in PREBEST, every boundary element in the model must have a valid material ID (greater than 9) assigned to it.
6. Be aware of a problem that may occur at interfaces. If unique elements are used at interfaces (which is the recommended modeling approach), there is no problem. Elements in each GMR can have unique material properties assigned. However, if non-unique elements are used at an interface (in other words, a single element is referenced in both GMRs), then it can be difficult to satisfy the requirement that only one material be assigned to a single GMR. The user cannot assign a material to one GMR and a different material to a second GMR if there is only a single layer of elements at the interface between them. This is one good reason to spend the extra time to use unique elements at interfaces, thus allowing GMRs (i.e., GROUPs) to be totally independent of each other.
7. If PREBEST detects that material properties are completely defined on all surface elements in the model, a message is printed to the screen and the log file to that effect.
8. If PREBEST asks the user to assign material properties to each GMR, then one of the above modeling requirements for automatic material assignments has not been met.

If the choice is made not to assign material properties to elements in the modeling program, or if one of the above-mentioned requirements for automatic material assignment has not been met, PREBEST will assign properties to each GMR according to the following:

1. If no material properties are detected in the model file, a set of default material properties will be created and assigned to GMRs without asking the user. All GMRs will reference this material ID. A warning is issued that this has been done.
2. If only one material property is detected in the model file, it is assigned to all GMRs without asking the user.
3. If more than one material property is detected in the model file, PREBEST will prompt the user to assign them on a GMR by GMR basis. Of course, the user may choose the ‘‘ALL’’ option to simplify the input when the remaining GMRs from that point on will reference the same material property.

9.3.6 ELEMENT PROPERTIES

It is advisable to assign property IDs to elements in their modeling program. Although GMRs can be defined using GROUPs, assigning property IDs to elements provides additional capabilities. Although properties are used extensively in finite element models to define beam cross-sections and shell thicknesses, these quantities are not utilized by PREBEST. PREBEST simply utilizes the *Property ID*, this being a convenient way to group similar elements together. In fact, it is the only way to partition GMRs into several surfaces. The use of property IDs also allows for automatic assignment of functional variations and material properties. It also has other benefits including more efficient GPBEST run-times. This section discusses these matters in detail.

Note: It should be emphasized that GPBEST *geometry* should always be quadratic (i.e., BAR-3, QUAD-8, etc.). In what follows, the mention of *linear* and *quadratic* applies to *functional variation* only, with the understanding that the element geometry is always quadratic.

9.3.6.1 GMR PARTITIONING

Modeling programs (I-DEAS, PATRAN, HYPERMESH, FEMAP, etc.) can be used to partition models into GMRs via GROUPs, as discussed in Section 9.3.7. Hence, this is called ‘‘GMR Partitioning.’’ Models must always be divided into GROUPs to enable PREBEST to create the GMRs properly.

The user has the option of assigning property IDs to elements within GROUPs. If the choice is made *not* to use property ID assignments, then the model is restricted to use ‘‘GMR partitioning.’’ In this case, when PREBEST translates the model, it asks the user what kind of functional variation (i.e., quadratic or linear) is desired in each GMR. If PREBEST detects a difference of functional variation across any interface, it automatically creates an extra surface in the quadratic GMR at the interface. This is discussed further in Section 9.3.8.2.

Limitations of GMR Partitioning

GMR partitioning without the use of property ID assignments has several limitations. These limitations especially arise when constructing complex 3-D models with large numbers of elements. The limitations are:

1. Individual surfaces within GMRs cannot be defined by the user.
2. A single GMR can have a maximum of two surfaces. For instance, it is not possible to connect a single GMR to multiple GMRs with different functional variations.
3. If two GMRs contact in multiple locations, all the contacting elements will be placed in a single interface. This is sometimes undesirable.
4. Perhaps the most important limitation is that users cannot use efficient modeling techniques. Optimally, it is desirable to be able to define a GMR using linear surfaces and use quadratic surfaces only where necessary.

For these reasons, it is recommended that users always assign property IDs to elements as discussed in the next Section.

9.3.6.2 SURFACE PARTITIONING

Surface partitioning is a method of partitioning that has been implemented in PREBEST that addresses all of the above limitations. The primary advantage of this method involves large GPBEST models. This is the preferred way to model elements and surfaces, and GPBEST users are encouraged to use this capability. It is still important to use ‘‘GMR Partitioning,’’ thereby breaking the model into logical parts. ‘‘Surface Partitioning’’ is an additional step that should be performed for all GPBEST models.

For example, let us say that a large boundary element model using quadratic elements takes 5 hours to run on a workstation computer. (Large boundary element models are typical when CAD systems automatically mesh surfaces). The same model using linear elements may take only 20 minutes. However, the results from a model consisting entirely of linear functional variations may not be quite as good as the results from an all-quadratic model, especially when stress concentrations are present.

The situation can be remedied by using property IDs to define quadratic surfaces only where needed to capture the variation of the result quantities (i.e., stress concentrations, etc.). The rest of the model can still be modeled by using linear functional variation. This new (hybrid) model may run in just 25 minutes and will be nearly as accurate as the fully-quadratic model that took 5 hours to run. Thus, with the proper choice of surfaces and functional variation, there can be large gains in efficiency when running GPBEST.

Modeling Requirements for Surface Partitioning

The user should be aware of the following requirements for partitioning boundary element models in the modeling programs (I-DEAS, etc.)

First, when constructing the model, property IDs should be assigned to each element in the model in accord with the values in the Table 9.3.6.1.

Table 9.3.6.1 Choosing the Property ID for Elements

Property ID	Functional Variation
10-29	Linear
30-49	Linear Bubble
50-69	Quadratic (Serendipity)
70-89	Quadratic (Lagrangian)

For example, to model an entire GMR with linear functional variation elements, use property IDs 10-29.

To define multiple surfaces within a single GMR, use different IDs from Table 9.3.6.1. For instance, the following illustrates how GMRs, surfaces, etc. could be defined for a model:

GPBEST Entity	GPBEST Sub-Entity	How to Model
GMR1		Define a group named ‘‘GMR1’’, containing all nodes and elements in that GMR.
	First Surface, using quadratic elements	Assign property ID 51 to selected elements in group ‘‘GMR1’’ to define the first surface.
	Second Surface, using linear elements	Assign property ID 11 to selected elements in group ‘‘GMR1’’ to define the second surface.
	Third Surface, using linear elements	Assign property ID 14 to selected elements in group ‘‘GMR1’’ to define the third surface.
	Sampling Surface	Define a group named ‘‘SS01_GMR1’’, containing all nodes and elements on that sampling surface. (Property IDs are ignored for sampling surfaces.)
GMR2		Define a group named ‘‘GMR2’’, containing all nodes and elements in that GMR.
	Surface, with quadratic Lagrangian elements	Assign property ID 77 to all elements in group ‘‘GMR2’’ to define the surface.
	Sampling Points	Define a group named ‘‘SS01_GMR2’’, containing the free sampling nodes.
Group 00_BCS1		Define a ‘‘construction group’’, which is ignored by the PREBEST translator. (Construction groups are purely for the sake of convenience. Their group names must start with ‘‘00_’’, i.e. zero, zero, underscore.)

Assigning Property IDs to Elements

(Please read the following requirements carefully.)

1. GMRs must still be defined using GROUP definitions.
2. Within a single GMR, all elements with the same property ID will be placed in a single surface.
3. A single property ID can be used on elements in multiple GMRs or across the whole model, if desired. However, the PREBEST program will place each surface in the proper GMR specified by the group definition.
4. Properties 1-9 are ignored by PREBEST.
5. The surface partitioning only applies to elements making up SURFACEs in GMRs. Other entities, such as sampling surfaces, volume cells and line elements, are unaffected by the surface partitioning.
6. In the future, property IDs above 100 will be used to define properties for special elements, such as line elements, etc. However, those property IDs will not be used for surface partitioning. Property IDs above 89 are ignored by the current version of PREBEST.
7. The surfaces will be labeled in the GPBEST data file using the property ID that was used to define the surface. For instance, a property ID of 50 will generate a surface named ''SURF50''.
8. All boundary elements must have property IDs assigned for the surface partitioning to work. If any boundary (surface) elements in the model have unassigned or invalid property IDs, all property IDs will be ignored, and the model will be partitioned by PREBEST using the previous scheme (i.e., only GMR partitioning). All modeling programs (I-DEAS, etc.) allow the user to easily assign a property ID to every element in the model.
9. If PREBEST detects that surface partitioning is being used, a message will be printed to the screen and the log file to that effect. Also, it will not ask the user what functional variation is desired in each GMR, since this will have already been defined through the property ID. This further reduces the user input required by PREBEST.
10. If PREBEST does not partition the model into surfaces through property IDs, then one of the above modeling requirements has not been met.
11. The above designations *linear* and *quadratic* apply to functional variation only. Users should always use quadratic geometry. For example, the boundary of a large 3-D model should be modeled using QUAD-8 type elements. However, to run more efficiently in GPBEST, linear functional variation could be chosen.
12. At the present time, the BESTVIEW program does not support surface partitioning.
13. At this time, the user is responsible for defining surfaces properly by assigning property IDs. Very little surface checking is performed by PREBEST.

Alternate Method to Specify Surfaces

The above procedure for specifying surface partitions (i.e., via property IDs) is the recommended approach. However, some modeling programs, such as HYPERMESH, impose limitations on groups that may not allow the user the modeling freedom they desire. For instance, HYPERMESH

only allows one property per ‘‘component’’ (GROUP). In this case, there is an alternative method for specifying surfaces via a special GROUP label.

When GROUPs are named with a prefix ‘‘SU’’, followed by a number representing a valid property ID, followed by an underscore, ‘‘_’’, followed by the GMR name, this will be recognized by the PREBEST translator as a surface partition within the GMR. Of course, this GROUP should contain only the elements and nodes that make up the desired surface. (HYPERMESH only permits elements to be placed into components (GROUPs)). In the previous example, the three surfaces in GMR1 would have GROUP names SU51_GMR1, SU11_GMR1, and SU14_GMR1. There is no GROUP named ‘‘GMR1’’; GMR ‘‘GMR1’’ will be constructed from these three GROUPs. The PREBEST translator will recognize that these three GROUPs are actually three surfaces within GMR1. GROUPs named this way will be treated as if the element property IDs were assigned to the corresponding elements. Any property IDs that have been assigned to surface elements will be ignored, as the numerical value from the GROUP label will be used. As mentioned previously, the preferred method of partitioning GMRs into surfaces is via element property IDs. However, this alternative approach (i.e., via GROUP labels) provides additional flexibility. This method works with all modeling programs, although it is primarily intended for HYPERMESH.

9.3.7 GMRS (GROUPS)

GPBEST uses GMRs as a way of partitioning a model into managable parts. Each GMR has only one material. GMRs facilitate grouping logical sections of a boundary element model together. It also results in more efficient solving. A large model with only one GMR may result in an excessively long run-time. However, if the same model is broken up into several GMRs, the run-time will be much less.

While GPBEST uses GMRs to partition models, the modeling programs do not. Modeling programs use ‘‘GROUPs,’’ and it is important to distinguish between GMRs and GROUPs. In this manual, ‘‘GMR’’ always applies to GPBEST modeling, while ‘‘GROUP’’ always applies to modeling programs. Note that HYPERMESH uses the term ‘‘components,’’ and I-DEAS uses the term ‘‘permanent group.’’ These are equivalent to GROUPs in the other modeling programs.

Basically, the user will define GMRs for GPBEST analysis using the GROUP concept in their modeling program. By defining several GROUPs in their modeling program and assigning nodes and elements to each GROUP, PREBEST will create the GMRs in the GPBEST data file. These will be listed under each **GMR section.

However, there are some subtle but important differences between GROUPs and GMRs that must be understood. Basically, the following items should be included in GROUP definitions, if appropriate for the problem at hand:

1. Nodes and elements making up the boundary surface of each GMR.
2. Volume cell elements and their associated nodes. Note that where volume cells meet boundary elements, they should share the same node numbers.
3. Line (hole) elements and their associated nodes.
4. Unconnected nodes (i.e., freely-floating nodes) to be used to define body forces in the form of point sources or point forces.
5. Unconnected nodes (i.e., freely-floating nodes) to be used to define the axis of a TORQUE boundary condition (Load Set 147).

Note that SAMPling POINts and SAMPling SURFaces are placed in separate GROUPs, as discussed in Section 9.3.9. Also note that an unconnected node (i.e., freely-floating node) used to define the location of a GLOAD load should not appear in any GROUP (GMR) list. Its number and location in space should be defined, but it should not be included in any GROUP (GMR) list.

Some modeling programs allow the user to place many types of geometric entities and finite element entities into GROUPs. For instance, a user may want to group together some nodes, elements, materials, and boundary conditions. However, for GPBEST modeling, only nodes and elements should be placed in GROUPs. Including other entities in GROUPs may result in unpredictable behavior.

When modeling a single-GMR problem, an explicit GROUP does not need to be defined. PREBEST will merely place all entities into a single GMR. However, if the user creates a single-GMR problem but wants to define a sampling surface (or sampling points), then the base GMR GROUP and the sampling surface GROUP must be explicitly defined.

9.3.7.1 MODELING INELASTIC REGIONS

In material nonlinear problems (i.e., plasticity), volume cells must be included in GMRs (and GROUPs) where plastic material behavior is expected. The volume cells are similar to finite elements such as tetrahedra, bricks, etc. for 3-D problems and quadrilaterals and triangles for 2-D problems.

Figure 9.3.7.1.1 illustrates a 2-D plasticity model. The model of the boundaries of the GMRs are built exactly like an elastic model. Additionally, volume cells must be added to fill out GMRs where plasticity is expected to occur, i.e., the cells must completely fill the interior of the GMR. Also, the internal volume mesh must be compatible with the elastic boundary mesh. Hence, they should share the same nodes on the boundary. In other words, the interior volume mesh should not be independent from the boundary mesh. Note that the volume nodes and cell numbers should be placed in the same GROUP as the boundary nodes and boundary elements. PREBEST will partition them into boundary and interior regions of the same GMR automatically.

Any property IDs and material IDs that are referenced by volume cells are ignored by PREBEST. These IDs only apply to boundary (surface) elements.

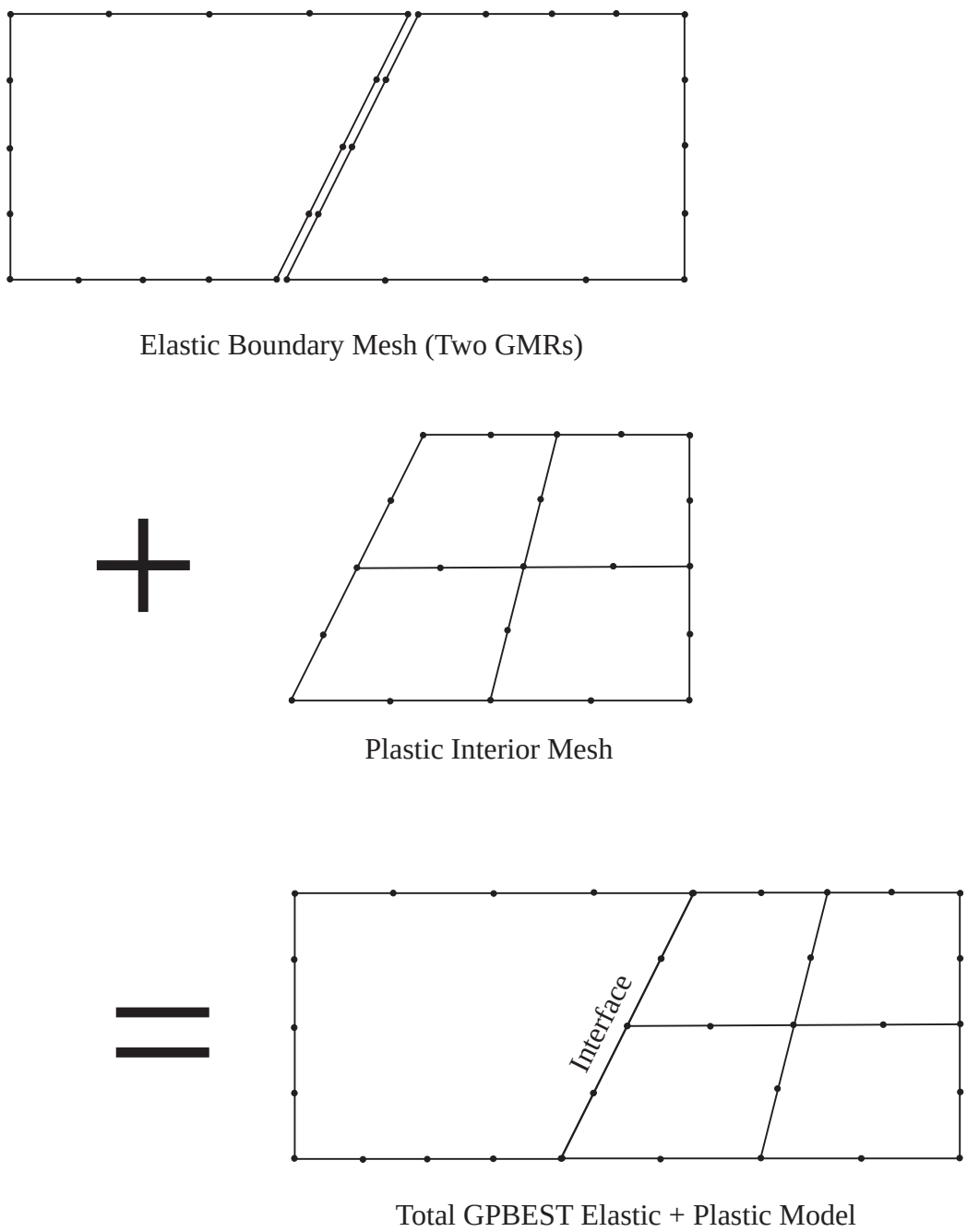

Figure 9.3.7.1.1 Mesh for Problem Involving Plasticity

9.3.7.2 CONSTRUCTION GROUPS

Frequently, in the process of constructing a model, temporary GROUPs of nodes and elements are utilized. For instance, a user may create a temporary GROUP to facilitate the application of boundary conditions. Instead of having to delete the temporary GROUP after the boundary conditions are defined, name the GROUP ‘‘00_’’ (zero, zero, underscore) followed by any label. For example, a group named ‘‘00_BCTEMP’’ could be used for this purpose. It is not necessary to delete this GROUP afterward because PREBEST will ignore any GROUPs whose name starts with ‘‘00_’’. All other GROUPs will be processed by PREBEST, even if the user did not intend for them to be incorporated.

9.3.7.3 SUMMARY OF GROUP NAME RULES

The following table provides some examples of GROUP names.

Table 9.3.7.3.1 GROUP Name Examples

Entity	Group Name Example
GMR	GMR98; SteelRing
Sampling Surface	SSTOP_GMR5; SS99_BASE
Sampling Points (not attached to elements)	SSBOT_GMR5; SSFREE_CAP
Surface Definition (alternate method to property ID)	SU14_GMRONE
Construction Group	00_TEMP1

Please observe the following rules when naming GROUPs:

1. GROUP names are limited to 12 characters in the current release of PREBEST.
2. GROUP names cannot have any spaces within the name. They must be made up of alphabetical characters, numbers, and/or the underscore (_) character.
3. Do not name any GROUPs starting with the prefix ‘‘II’’ (letter ‘i’, letter ‘i’). This name is reserved for a future capability in PREBEST. Any GROUPs named this way will be ignored by the present version of PREBEST.

9.3.8 INTERFACES BETWEEN GMRS

9.3.8.1 GENERAL REMARKS

Nodes and elements in adjacent GMRs make up the ‘‘Interfaces.’’ They are translated as **INTERFACE blocks by the PREBEST translator. However, they do not need to be explicitly defined in the modeling program. This is because PREBEST has a very sophisticated scheme for determining where interfaces exist by comparing element and nodal locations across different GROUPs. (This accounts for a significant amount of the CPU time that PREBEST takes to run.) This is why it is imperative that nodes in adjacent GROUPs are coincident at their interfaces. If they are not coincident or outside a given tolerance, PREBEST will not detect them as an interface.

The detecting of interfaces is often a source of problems for new as well as experienced GPBEST users. The following suggestions are given to help create GROUPs so that PREBEST can properly locate their interfaces:

1. Nodes and elements can be copied from one GROUP to another GROUP, thus insuring that they will be coincident. This is the most reliable way of getting the interfaces correct.
2. Take great care to make sure nodes are coincident at interfaces. Some manual manipulation may be necessary.
3. It is possible to have a single set of nodes and elements on an interface but be referenced by both GROUPs. This is frequently encountered in I-DEAS. Refer to comments about non-unique entity numbering in Section 9.3.8.3.
4. It may be helpful to check the **INTERFACE blocks in the resulting GPBEST data file. By comparing the elements in the **INTERFACE blocks with the elements in the modeling program, the user can check whether the interfaces have been properly detected by PREBEST. This should not require much time, even for a very large problem.
5. In some cases, even though two surfaces of adjacent GMRs may be coincident, there may not be connected. In other words, they are free to spread apart or overlap. If this is what is intended, this **INTERFACE should be manually deleted from the GPBEST data file.
6. The modeling of gap-type interfaces is not supported in the present version of the PREBEST translator. Refer to the TOLErance card in Section 5.4.1 in the GPBEST User’s Manual for more information on this.) Gap interfaces involve nodes and elements that intentionally do not line up; i.e., they are noncoincident. Therefore, PREBEST will assume that they belong to separate GMRs and will not detect them as interfaces. If the user needs to model separated interfaces, they should create the GMRs by modeling the gap in their modeling program, but must edit the GPBEST data file to include the appropriate **INTERFACE blocks.
7. For the benefit of the user, it may be helpful to understand the tolerance scheme that is used by PREBEST to determine interfaces. The default tolerance scheme used by PREBEST is

the same one used by GPBEST. Basically, the tolerance is one-tenth the smallest distance between two source points of either GMR. Nodes falling outside this tolerance are not considered to be on the same interface.

Unsupported **INTERFACE Cards

The following GPBEST **INTERFACE cards are not supported in the current version of PREBEST, but will be supported in a future version. If the user needs to define any of these, they must manually edit the GPBEST data file after running PREBEST.

TOLErance

SANDwich

EQUIvalence

OFFSet VARIABLE

CLINe-gmr-1

CLINe-gmr-2

POINt-gmr-1

POINt-gmr-2

All other **INTERFACE cards listed in Section 5.4 of the GPBEST User's Manual are supported by PREBEST.

9.3.8.2 FUNCTIONAL VARIATION ACROSS INTERFACES

Certain issues can be encountered at interfaces between GMRs that have different functional variations. PREBEST will handle each situation differently depending on whether or not property IDs have been assigned to elements.

Without Surface Partitioning (Without Property IDs)

This situation is discussed in Section 9.3.6.1. Without property IDs assigned to elements, PREBEST will ask the user to specify linear or quadratic functional variation for each GMR. If the user specifies a linear variation in one GMR and a quadratic variation in an adjacent GMR, PREBEST will will internally partition the quadratic GMR into a quadratic surface and a linear surface, with the linear surface at the interface of the linear GMR. The important point here is that the lower order (i.e., linear) prevails at the interface, because at the common boundary between quadratic and linear elements, the edges of the quadratic elements are made linear. (This is similar to the situation in Figure 9.3.8.2.2, where the second surface is generated automatically by PREBEST).

Using Surface Partitioning (With Property IDs)

This situation is discussed in Section 9.3.6.2. If the user is assigning property IDs to partition a model into surfaces, they must be careful to insure proper behavior at the interfaces. When property IDs are used, PREBEST does not automatically create a separate surface at the interface. The user must carry out this step.

For illustration purposes, suppose two GMRs are being constructed which share a common interface (Figure 9.3.8.2.1). There are three situations possible:

Case 1 Both GMRs have the same functional variation, either linear-linear or quadratic-quadratic. In this case, each GMR can be modeled without having to partition the model into multiple surfaces due to the interface. This case is not shown in the figures since it is straight-forward.

Case 2 (Figure 9.3.8.2.2): GMR LEFT is quadratic, and GMR RIGHT is linear, but the interface is linear. In this case, the user should create a second surface in GMR LEFT at the interface and use a property ID that will result in linear functional variation for the second surface. This is basically the way PREBEST works, as described at the beginning of this section. However, in this case, the user must perform the partitioning in the modeling program.

Case 3 (Figure 9.3.8.2.3): GMR LEFT is quadratic, and GMR RIGHT is linear, but the interface is quadratic. One needs to be very careful here! The user must create an extra surface (called SURF2 in GMR RIGHT) which incorporates the interface elements *and the next row of elements that are connected to them*. The reason for this is that at the edge of a linear-quadratic mixture of elements, the functional variation takes the lower order. Thus, the degrees of freedom at the GMR interfaces will not be the same, which GPBEST does not allow. This is why Case 2 and Case 3 each require that different action be taken by the user. Note that the situation depicted in Figure 9.3.8.2.3 is readily handled by PREBEST when surface partitioning (via property ID) is used, but the user must manually define the surfaces.

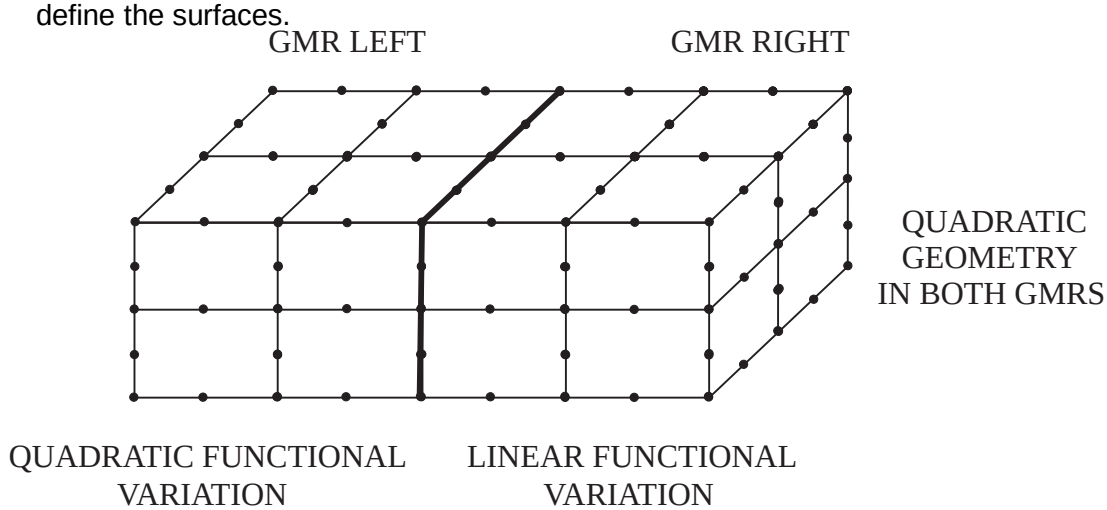

Figure 9.3.8.2.1 Two-GMR Model: Geometry is Quadratic in Both GMRs
(Functional Variation Transitions From Quadratic to Linear)

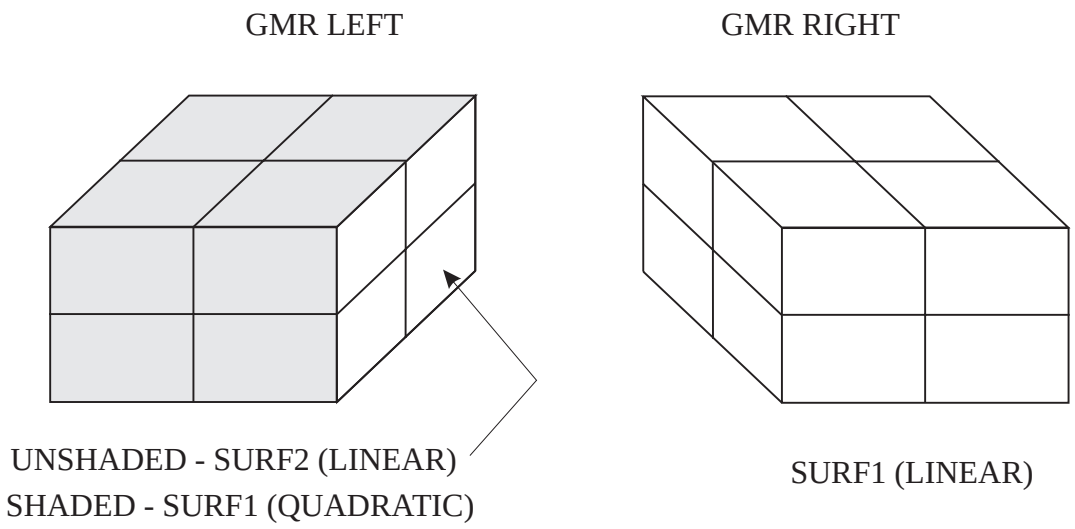

Figure 9.3.8.2.2 Solution 1: Lower Order Prevails at Interface

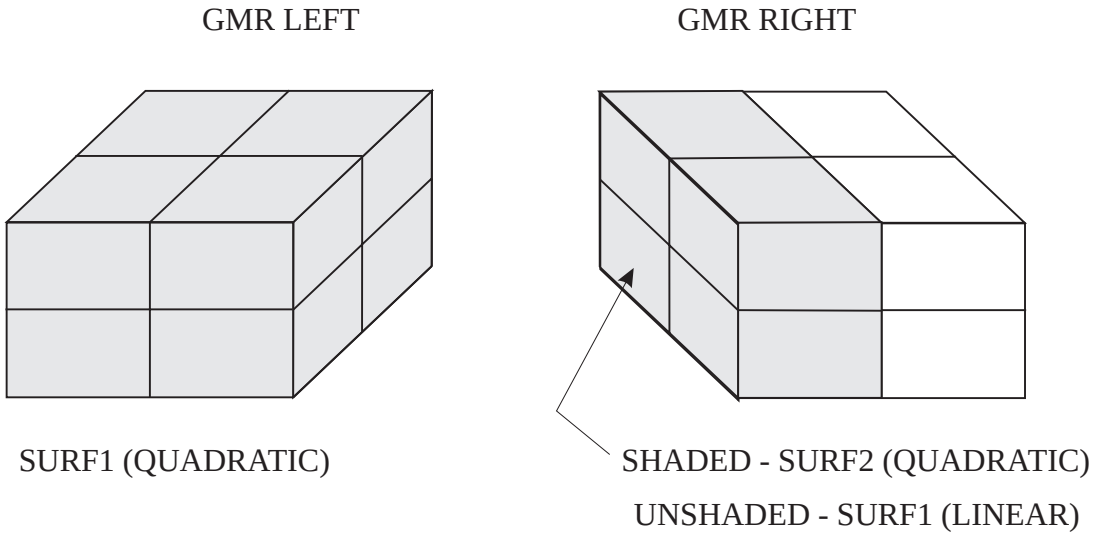

Figure 9.3.8.2.3 Solution 2: Higher Order Prevails at Interface

9.3.8.3 ENTITY NUMBERING AT INTERFACES

Since GMRs are independent modeling entities in GPBEST, they should not really contain any nodes or elements with the same numbers that occur in another GMR. While GPBEST allows non-unique entity numbering, modeling programs do not. In particular, issues concerning entity numbering can arise at interfaces, and can affect how POSTBEST is run.

We will demonstrate a simple 2-GMR problem with one interface (Figure 9.3.8.3.1). Two approaches can be taken, with corresponding pros and cons to each approach.

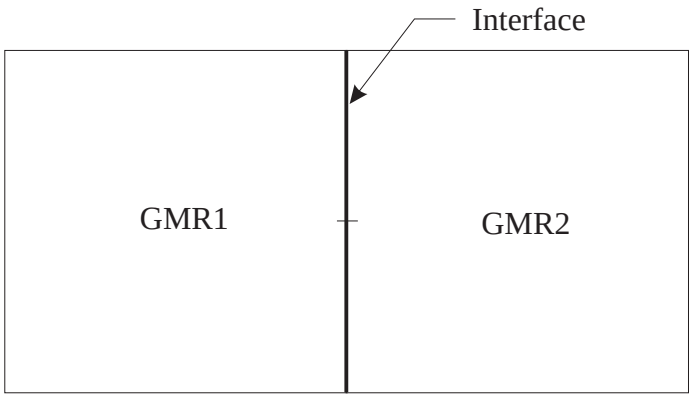

Figure 9.3.8.3.1 Assembled Two-GMR Model

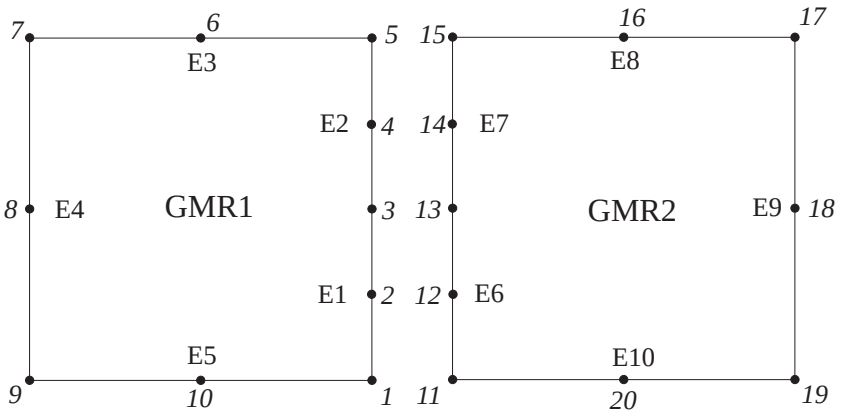

Figure 9.3.8.3.2 Case I: Unique Node and Element IDs

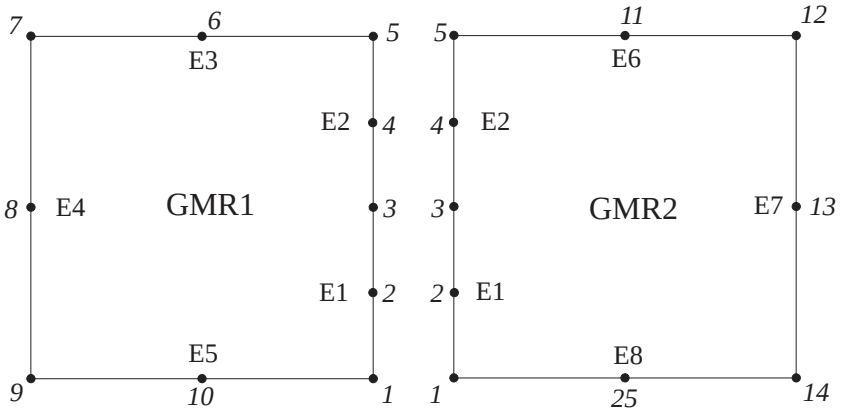

Figure 9.3.8.3.3 Case II: Single Row of Nodes and Elements

Unique Entity Numbers (Case I)

To avoid potential interface problems, it is recommended that the numbering approach in Figure 9.3.8.3.2 be adopted. Two rows of nodes and elements are present at the interface and all node and element numbers are unique. The following pros and cons apply to Case I:

PROS:

1. Each GROUP (GMR) can be operated on individually. Each GMR is totally independent of other GMRs.
2. This can be used for sliding interfaces, which requires two sets of unique element numbers at the interface.
3. Some modeling programs (e.g., HYPERMESH) stipulate that an element can only belong to one GROUP. When unique numbers are used at the interface, this requirement is met.
4. When running POSTBEST, the user can choose *not* to renumber nodes and elements. Therefore, the results can be imported into the modeling program and viewed using the original entity numbers. This can help tremendously during the model-debugging phase, where problems can be easily discovered and corrected when viewing the original (unrenumbered) entities.
5. This method will allow the user to assign different materials to adjacent GMRs since the interface elements are independent of each other.

CONS:

1. The user must make sure nodes and elements are coincident at interfaces.
2. Care must be exercised to collapse coincident nodes in only one GROUP at a time. If the entire model is operated on, there is a possibility that the unique node numbering will be lost.

Using One Row of Nodes and Elements at Interfaces (Case II)

On the other hand, Figure 9.3.8.3.3 illustrates another possibility that many modeling programs permit. It is the default situation encountered when using I-DEAS. A single row of nodes and elements are present at the interface. The GMR definitions for both GMRs must include the nodes and elements at the interface. The following pros and cons apply to Case II:

PROS:

1. The user does not need to worry about matching nodes and elements across adjacent groups. Since there is only one set of nodes and elements there, the interface is completely defined by these.
2. Mesh refinement or mesh changes at interfaces are easily accomplished as long as the nodes and elements at interfaces appear in both GMRs.
3. Coincident nodes can be collapsed for the entire model. The user does not need to perform coincident-node checking on one GROUP at a time.

CONS:

1. Each GROUP (GMR) is no longer independent of all other GROUPs. They now share some node and/or element numbers (at the interfaces).

2. This approach cannot be used to model sliding interfaces, which require two sets of unique entities at interfaces.
3. This approach cannot be used in modeling programs that require unique entity numbers in GROUPs (e.g., HYPERMESH).
4. While running POSTBEST, the user *must* renumber entities. This will create a model file, and result file that are incompatible with the original model file, since the entities will be renumbered. This model file and result file can still be used to view results properly, since they both contain renumbered entities. However, when entities are renumbered in POSTBEST, these results should not be imported into the original model file for post-processing. This is because their node and element numbers will not correspond.
5. Since only one material can be assigned to each GMR, this method will not work if two GMRs reference different material properties on each side of the interface between them. In this case, the user may have to edit the GPBEST data file manually to assign materials. As another approach, the user could just assign the appropriate materials to GMRs during the PREBEST session.

For the above-stated reasons, using unique node and element numbers at interfaces (Case I) is recommended. However, either approach (Case I or Case II) can be used as long as the above implications are well understood.

NOTE: If you originally had two sets of entities at the interface but then merged the nodes at the interface, you should also merge the elements. Otherwise, a hybrid model will result which has unique element numbers and shared nodes. It is better to have a single set of elements and nodes rather than to have a hybrid model.

Possible Work-Around

If there is no choice other than to use a single row of nodes and elements at interfaces, there is a possible work-around that can be used to generate unique nodes and elements everywhere in the model. This is not required, but can be useful if the user wants to use two independent sets of nodes and elements at the interface.

1. Create the model using a single row of nodes and elements at each interface. Define GMRs using GROUPs. The GROUPs on both sides of each interface will reference the same nodes and elements. Do not define materials, boundary conditions, etc. at this point.
2. Create a GPBEST data file from this model file using PREBEST. Insert a CHECk card and a NEUTral card in the **CASE section of this file. For 2-D problems, make sure there is no CONTour card in **CASE. Run GPBEST.
3. Run POSTBEST, requesting to *renumber* all entities. If this step is successful, delete or move the model file created in step 1), as it will no longer be needed.
4. Import this model file into a new database in the modeling program. Now, all node and element numbers will be unique, thus resulting in GMRs that are totally independent of each other. No checking for coincidence needs to be performed at the interfaces, since the entities there were generated from the same original entities.

5. Now, proceed to define material properties, assign property IDs, define boundary conditions, etc., using the new (renumbered and unique) entities.

9.3.8.4 CYCLIC-SYMMETRY INTERFACES

When working with a cylindrical section of a model, GPBEST's cyclic symmetry capability can be used to advantage. It is documented in Section 5.4.6 of the GPBEST User's Manual.

In the following example, suppose the cyclic-symmetry section of the model spans $30°$ around the Z-axis. Refer to the following Figure. In this example, the following comments apply:

1. All the nodes and elements on ''Side A'' of the cyclic interface lie in the X-Z plane. This corresponds to $\theta = 0°$.
2. Unlike the case of general (rectangular) symmetry, cyclic symmetry requires the nodes and elements to be modeled on the cyclic interfaces.
3. Note that it is not a requirement in cyclic symmetry to have all the entities on the cyclic interfaces lie on planes. The nodes and elements on Side A must be able to be rotated around an axis to line up with the nodes and elements on side B. See Section 5.4.6 of the GPBEST User's Manual for more information.
4. All the nodes and elements on ''Side B'' of the cyclic interface lie in a plane that corresponds to a rotation of the X-Z plane by $30°$ around the Z-axis.
5. When PREBEST asks if cyclic symetry is present in the model, answer ''Yes.'' When prompted for the angle, enter ''$30°$''. Specify the Z-axis as the direction of rotation by entering ''0. 0. 1.''.

Under these conditions, PREBEST will automatically determine the cyclic interfaces and add them to the GPBEST data file. Note that several GMRs may be used at cyclic-symmetry interfaces, as shown in the Figure.

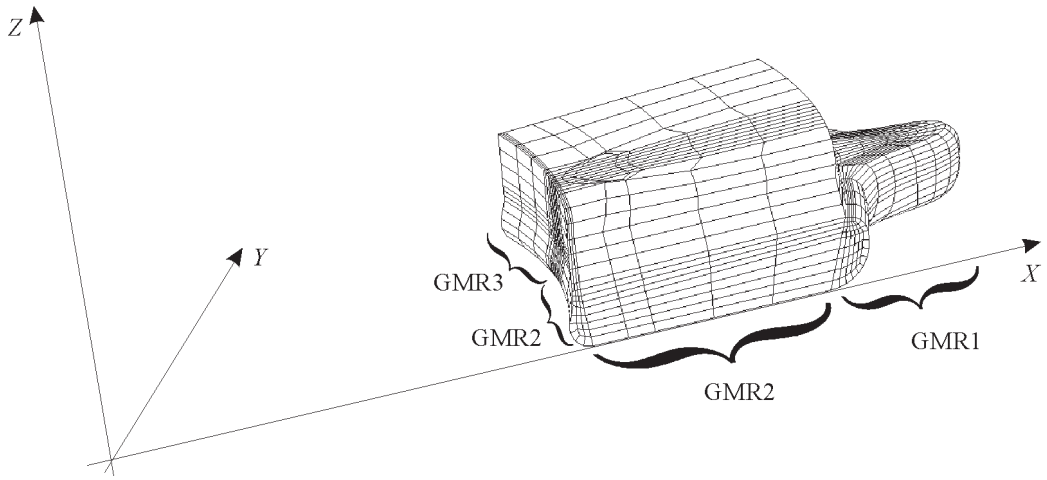

Figure 9.3.8.4.1 Model Utilizing Cyclic-Symmetry

9.3.9 SAMPLING SURFACES

For 3-D problems, the user is restricted to view results on the boundary only, due to the lack of an internal mesh. However, the user may wish to examine results inside the boundary. To overcome this limitation, the concept of the *Sampling Surface* has been introduced in GPBEST. A sampling surface is a collection of surface elements (quadrilaterals and/or triangles) within a GMR for interior problems, or outside a GMR for exterior problems. The boundary edges of the sampling surfaces may be coincident with the boundary mesh of the model. Multiple sampling surfaces are allowed within each GMR. However, sampling surfaces are not permitted to cut across GMRs. The user must observe certain rules in order to have sampling surfaces correctly translated by PREBEST.

Individual sampling surfaces or a group of unconnected sampling surfaces within a GMR must be defined as a GROUP. Like regular GMRs, GROUPs used for sampling surfaces should contain both nodes and elements. However, sampling surfaces are not permitted to cut across GMRs.

A restriction lies in the naming of this GROUP. The name must begin with the letters ‘‘SS’’ followed by an underscore ‘‘_’’. This is followed by the name of the GMR (GROUP) to which the sampling surface belongs. For example, a sampling surface GROUP name could be ‘‘SSONE_TOP’’. In this case, ‘‘ONE’’ is a sampling surface within GMR ‘‘TOP’’. Careful attention must be given to insure that the composite name does not exceed the maximum number of characters allowed in the preprocessing package. This is often limited to twelve characters.

Normally, the user does not need to define any GROUPs for a single-GMR problem since all entities will be placed automatically in a single GMR by PREBEST. However, if the user wishes to define one or more sampling surfaces in a single-GMR problem, the GROUP defining the GMR and the GROUP(s) defining the sampling surface(s) must be defined.

Figure 9.3.9.1 shows how two sampling surfaces can be inserted inside a 3-D GMR to monitor interior results. Note that it would also be admissible to define the two sampling surfaces as one by grouping them together even though they are unconnected, although this case is not shown here.

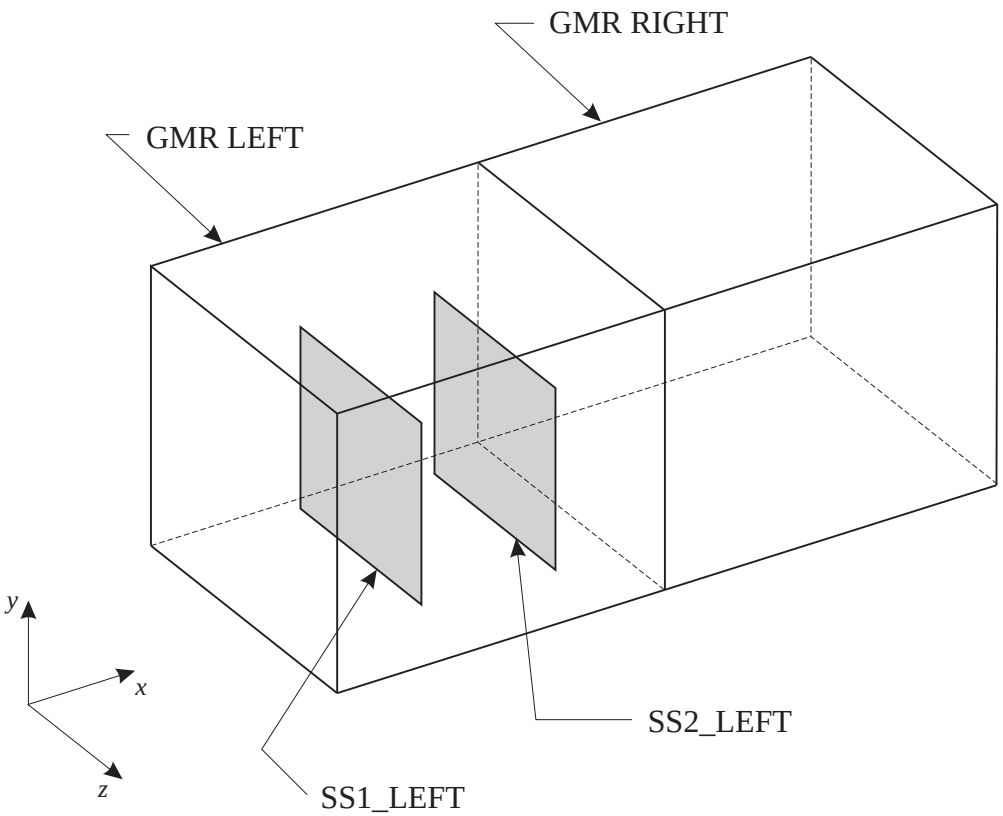

Figure 9.3.9.1 Sampling Surfaces Inside a 3-D GMR

The concept of the sampling surface is generally not relevant to two-dimensional problems because of the availability of the CONTour card. The CONTour card in **CASE causes an interior 2-D mesh to be created by GPBEST for post-processing purposes only. However, for 2-D *exterior* problems, one can use sampling surfaces to view results in the exterior domain. This case is illustrated in Figure 9.3.9.2, where a sampling surface made up of two rows of ‘‘elements’’ exterior to the GMR is used to monitor behavior in the far-field.

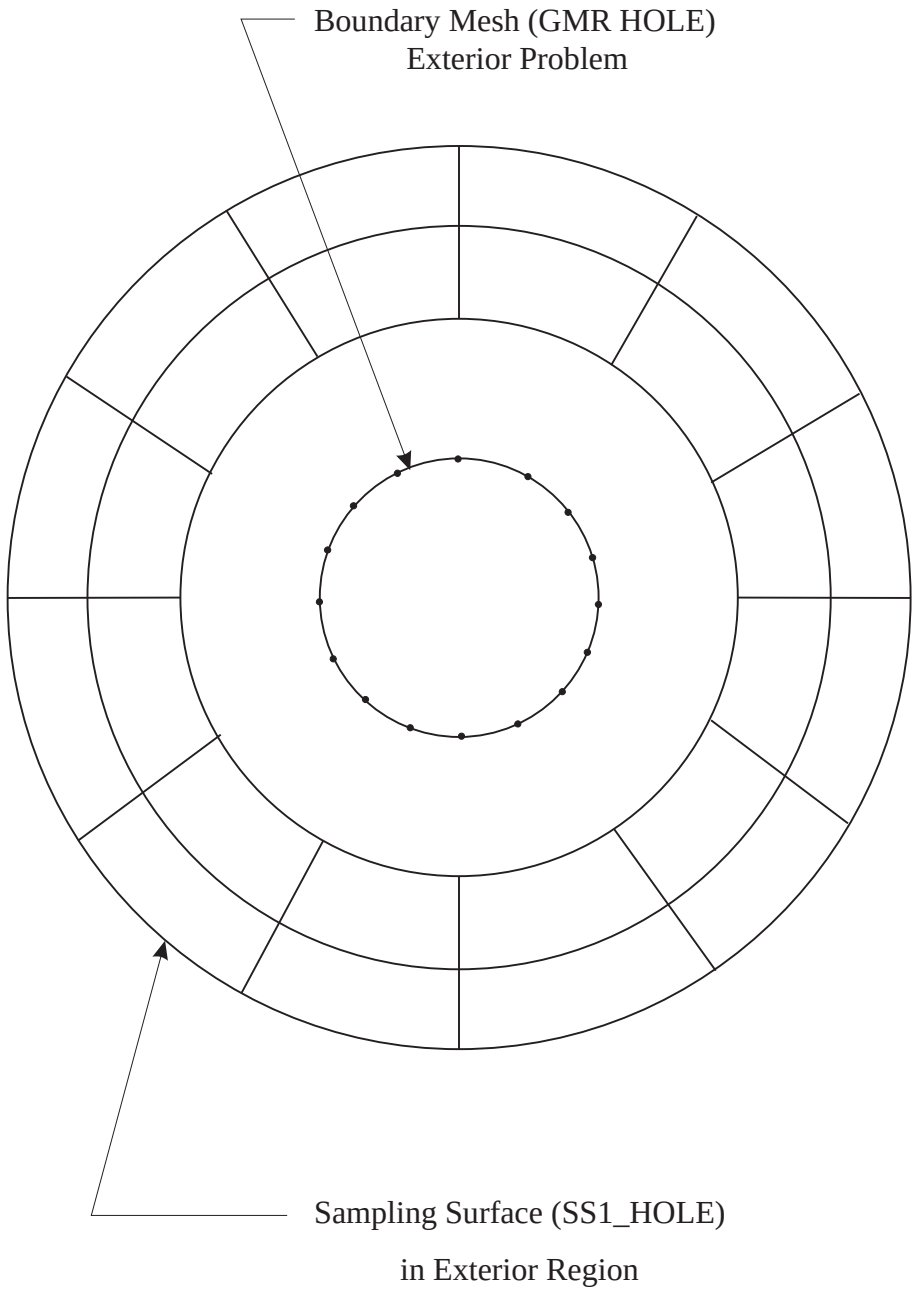

Figure 9.3.9.2 Sampling Surface For 2-D Exterior Problem

9.3.10 SAMPLING POINTS

In some situations, the user may want to monitor results at discrete points in the model. In this case, elements are not needed, but nodes are. These nodes are called ‘‘Sampling Points’’ in GPBEST. Sampling points can be defined in a similar manner to sampling surfaces as described in the previous section. Thus, the sampling point nodes are placed in a GROUP. The GROUP name begins with the letters ‘‘SS’’ followed by an underscore ‘‘_’’, followed by the name of the GMR (GROUP) to which the sampling points belong. Also be aware that sampling points cannot simply float anywhere in a model. They must be associated with a GMR, which is accomplished through the sampling surface GROUP name.

To illustrate, Figure 9.3.10.1 shows how several free sampling points are modeled in the user’s modeling program. Because this sampling surface GROUP (SSPOI_CUBE) has no elements associated with it, PREBEST will correctly translate these nodes into SAMPling POINts, while no SAMPling SURFace will be created.

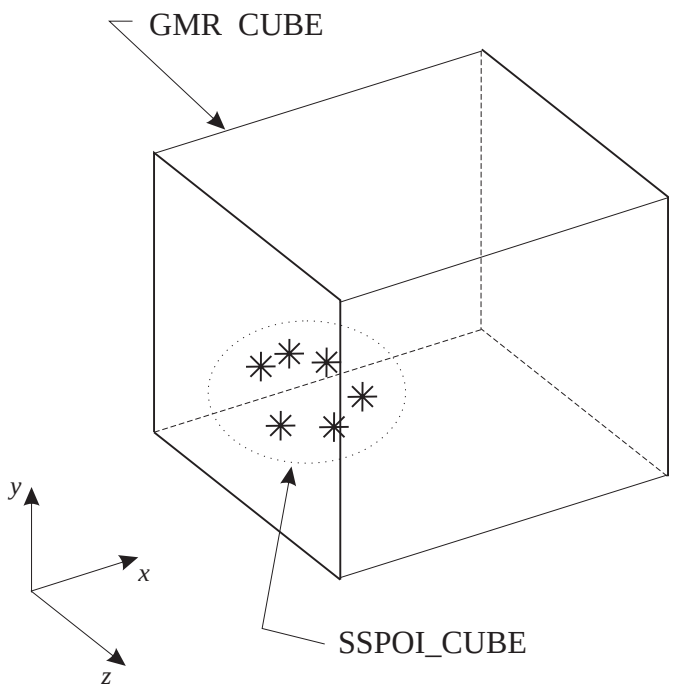

Figure 9.3.10.1 Modeling Discrete Sampling Points

Figure 9.3.10.2 illustrates a GMR (‘‘STEEL’’) with a sampling surface named ‘‘ABC’’. This will be properly translated by PREBEST. The SAMPling POINts in this GMR will include the unattached nodes as well as the nodes attached to the sampling surface elements.

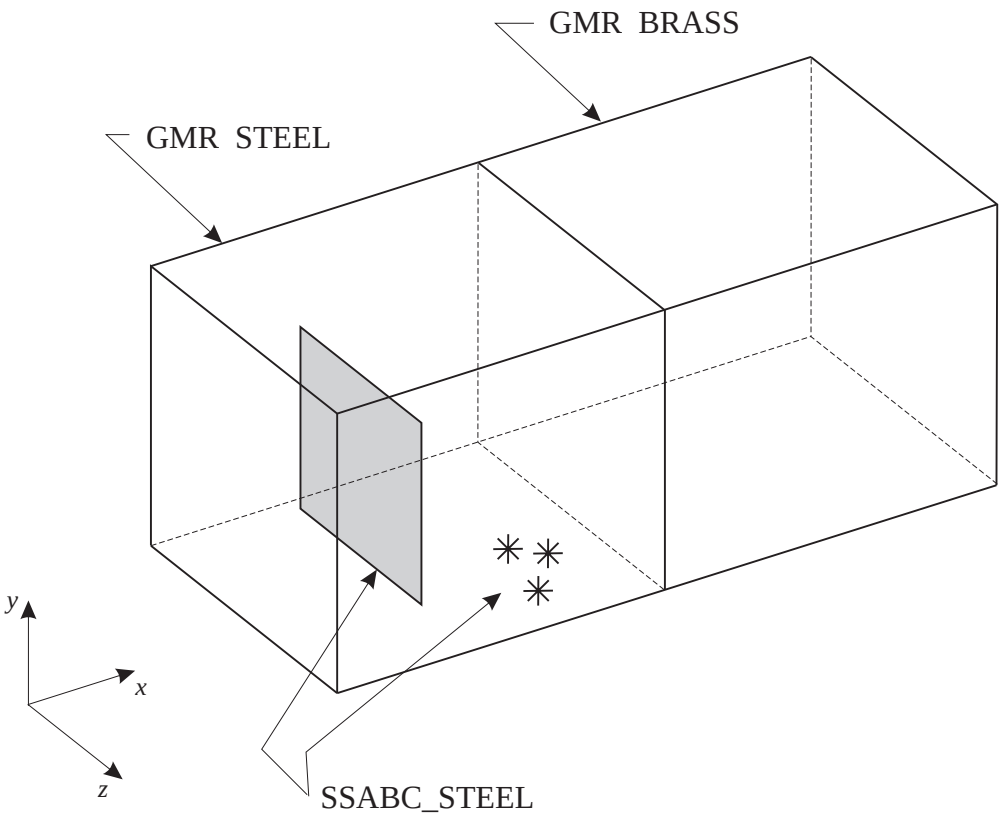

Figure 9.3.10.2 Sampling Surface With Extra Sampling Points

9.3.11 SYMMETRY

Various types of symmetry are supported by GPBEST and PREBEST. Among these are axisymmetry, generalized axisymmetry, cyclic-symmetry, and symmetry about the global coordinate planes, which is known as ‘‘planar symmetry.’’ The first three have been discussed elsewhere in this Chapter. Planar symmetry deserves some explanation here.

Planar symmetry allows the user to create a model using half symmetry, quarter symmetry, or octal symmetry. In each case, the user builds only a portion of their model in the modeling program. Care must be taken not to place a boundary mesh on the planes of symmetry since GPBEST will create the rest of the model internally. Meshing the planes of symmetry defeats the purpose of using this symmetry option.

After the portion of the model is built, PREBEST is run and asks if symmetry is desired. Answer ‘‘Yes’’, and then specify HALF, QUARTER, or OCTAL symmetry. Then specify the direction of symmetry as X, Y, and/or Z. For example, if the model is symmetric about the Y-Z plane, specify the X-direction.

The GPBEST data file will contain the proper SYMMetry card in **CASE. Refer to the description of the SYMMetry card in Section 5.1.7 of the GPBEST User’s Manual for more information on planar symmetry.

9.3.12 BOUNDARY CONDITIONS

Unlike finite element programs, where forces and boundary conditions are usually specified on nodes, boundary conditions in GPBEST are applied to elements instead of nodes.

NOTE: The term ‘‘boundary conditions’’ in this section includes both boundary restraints (displacements, temperatures, etc.) and boundary loads (tractions, pressures, fluxes, etc.)

The standard method of simulating boundary conditions in the modeling program involves:

1. Defining an appropriate *Load Set number*, taken from Table 9.3.12.1.
2. Applying a *pressure load* over the desired elements. Even though pressure loads are used in the modeling program, the Load Set number determines the true boundary condition type. Thus, even though pressure loads are applied to elements in a heat transfer problem, the resulting boundary conditions in the GPBEST data file will actually be in terms of temperatures, fluxes, and convections.
3. The boundary conditions (and loads) themselves do not need to be included in GROUP definitions. However, the elements making up GMRs must be included in the proper GROUPs. The PREBEST translator will place each boundary condition in the proper GMR when creating the **BCSET blocks in the GPBEST data file.
4. Where a non-zero value of a boundary condition is desired (e.g., Load Set 107), the magnitude of the ‘‘pressure’’ specified will be used for the magnitude of the boundary condition. Where two values are required, such as Load Set 121, which requires a convection coefficient and ambient temperature, only the first value is defined by the pressure magnitude. The second value will be set to zero, and the GPBEST data file may be edited if needed.
5. Where a zero value of a boundary condition is desired (e.g., Load Set 110), the PREBEST program will ignore the magnitude of the pressure load. Some modeling programs will not allow a user to specify a zero-magnitude pressure load. In these cases, specify the pressure load magnitude to be any non-zero value. PREBEST will ignore it.
6. Zero traction and zero flux boundary conditions do not need to be explicitly defined. If no boundary conditions are defined on a boundary element, it is assumed to have zero tractions or zero flux.
7. Multiple boundary conditions can be defined on a single element. Simply use different Load Set numbers to call out the different types of boundary conditions. In this way, the user could have an some elements with zero X-displacement restraints and still specify non-zero Y-displacements on the same elements.
8. If the modeling program asks in which ‘‘direction’’ the pressure load acts, always specify the ‘‘Global-X’’ direction, even if the actual load is in another direction. Some modeling programs assume pressure loads are going to act normal to the element, while others premit the user to define a (skew) direction. See the program-specific sections later in this Chapter for more details on this.

9. If the modeling program asks which ‘‘face’’ the pressure load acts on, always choose ‘‘Face 1’’. This may be an issue when pressures are specified on shell elements where there are two faces (top and bottom). PREBEST will always use values on ‘‘Face 1’’, and will ignore the other faces.

The Load Set numbers in Table 9.3.12.1 are used by PREBEST to generate the correct type of boundary conditions. For instance, if the user creates a Load Set 107, and models ‘‘pressure’’ loads on several elements, PREBEST will create a boundary condition set for these elements where X-displacements will be restrained to zero. The Load Set number determines the type of boundary condition for GPBEST analysis.

The present version of PREBEST does not allow the user to apply varying boundary conditions over an element. The pressure load must be constant. Where the user wants boundary conditions to vary over an element, they must manually edit the GPBEST data file created by PREBEST. Also, where time-varying boundary conditions are needed, these too must be accomplished through manually editing the GPBEST data file.

Be aware that the automatic normal direction routines in PREBEST can have implications in the direction that boundary conditions act. PREBEST checks every element in every GMR to make sure they have consistent normal directions (see the NORMal card description in the Section 5.3 of the GPBEST User Manual). If elements are found to have inconsistent directions, PREBEST flips them around. However, if these elements should have boundary conditions defined on them, their directions are *not* flipped over, i.e., their sign (+/-) is not reversed. Therefore, it is best if the user checks the element normal directions in the modeling program and adjusts them accordingly before applying boundary conditions.

In the GPBEST data file, boundary conditions are divided up by GMR. A single **BCSET block cannot be used to define a boundary condition in more than one GMR. However, this limitation does not exist for the user in the pre-processing phase. The user should merely apply pressure loads for each Load Set to *all* corresponding elements. PREBEST will divide them up into GMRs when writing **BCSET blocks to the GPBEST data file.

The modeling of boundary conditions in 3-D problems works as described above for all modeling programs. However, some modeling programs do not support pressure-type loading on beam-type elements which can occur in 2-D problems. In these cases, a work-around has been implemented in PREBEST. Basically, the user still defines appropriate Load Set numbers using values from Table 9.3.12.1. However, instead of creating pressure loads on beam elements, nodal displacement-type boundary conditions are specified on each of the nodes connected to the element. The magnitude of the nodal displacements cannot vary over the element. When PREBEST detects that every node on an element has the same Load Set number *and* the same magnitude of ‘‘displacement,’’ the proper elemental boundary condition block (**BCSET) is generated in the GPBEST data file. If a single node on an element is found to have a different magnitude of ‘‘displacement’’ than the other nodes, no boundary condition is generated for that element and that Load Set number. Note that this work-around is not necessary for 3-D problems.

Some boundary conditions are allowed at interfaces. For example, the user may need to specify a traction in-between the surfaces at an interface. This can be accomplished by defining the boundary conditions as described above. Make sure that the boundary conditions (via ‘‘pressures’’) are defined on both sides of the interface. Refer to the INTErface card in Section 5.5 of the GPBEST User’s Manual for more information.

Table 9.3.12.1 Load Set IDs and Corresponding Boundary Conditions

LOAD SET ID	GPBEST Boundary Condition
100	Pressure (opposite sign of normal traction) (non-zero)*
101	X component of traction (non-zero)
102	Y component of traction (non-zero)
103	Z component of traction (non-zero)
104	X component of displacement (non-zero)
105	Y component of displacement (non-zero)
106	Z component of displacement (non-zero)
107	X component of displacement is restrained (zero)
108	Y component of displacement is restrained (zero)
109	Z component of displacement is restrained (zero)
110	X and Y components of displacement are restrained (zero)
111	Y and Z components of displacement are restrained (zero)
112	X and Z components of displacement are restrained (zero)
113	X, Y and Z components of displacement are restrained (zero)
114	Temperature boundary condition (zero and non-zero)
115	Pressure boundary condition (non-zero) (for acoustic and consolidation problems and hole elements only)
116	Pressure boundary condition (zero) (for acoustic and consolidation problems only)
117	Spring in X direction (non-zero)
118	Spring in Y direction (non-zero)
119	Spring in Z direction (non-zero)
120	Flux boundary condition (non-zero)
121	Convection boundary condition (non-zero)
122	Normal component of (local) displacement (non-zero)
124	Normal component of (local) displacement is restrained (zero)
125	Both tangential components of (local) displacement are restrained (zero)***
126	Spring in normal (local) direction (non zero)
127	Spring in tangential (local) direction (non zero)**

...continued

LOAD SET ID	GPBEST Boundary Condition
128	Normal component of (local) traction (non zero)
129	Impedance (non zero)
130	Admittance (non zero)
131	Velocity (non zero)
132	Tangent-2 component of (local) displacement is restrained (zero)***
133	Tangent-3 component of (local) displacement is restrained (zero)
134	Tangent-2 component of (local) displacement (non-zero)
135	Tangent-3 component of (local) displacement (non-zero)
136	Tangent-2 component of (local) traction (non-zero)
137	Tangent-3 component of (local) traction (non-zero)
138	Spring in tangent-2 (local) direction (non-zero)**
139	Spring in tangent-3 (local) direction (non-zero)
140	X component of LOAD (non-zero)
141	Y component of LOAD (non-zero)
142	Z component of LOAD (non-zero)
143	HEAT LOAD (non-zero)
144	Normal component of (local) LOAD (non-zero)
145	Tangent-2 component of (local) LOAD (non-zero)
146	Tangent-3 component of (local) LOAD (non-zero)
147	TORQUE load (non-zero)****
148	GLOAD load (non-zero)*****

* For non-zero pressure (i.e. negative normal traction) in a hole element, use load set number 115. For pressure in acoustic and consolidation problems, use load set number 115 and 116.

** In 3-D analysis, load set 127 implies that both tangential components must have the same value of spring constants. To specify individual tangential components on springs, use load sets 138 and 139. In 2-D analysis, load sets 127 and 138 are equivalent.

*** In 2-D analysis, load sets 125 and 132 are equivalent.

**** When specifying nodes defining the axis of TORQUE application, the nodes must appear in the current GMR (GROUP) definition.

***** When specifying a node defining the location of a GLOAD load, the node must be defined but *not* appear in any GMR (GROUP) definition.

NOTES:

For axisymmetric analysis, X corresponds to the radial direction, Y corresponds to the axial direction and Z corresponds to the circumferential direction.

Default boundary conditions of zero tractions and zero flux are assumed on all elements unless otherwise specified.

If a component of displacement (or spring) is specified using the local coordinate system of an element, then all other components of displacement (or spring) prescribed on the element must be specified as a local component.

For local boundary conditions: See additional notes under the LOCAl card in the **BCSET section of the GPBEST manual.

9.3.13 BODY FORCES

In the current version of PREBEST, all body forces are defined interactively during the PREBEST session. The user cannot define any body forces, such as gravity loading, in the modeling program.

The specification of point sources or point forces requires the user to perform an extra action in the modeling program. In the modeling program, the user must perform the following two steps:

1. Extra nodes must be created where point sources or point forces will be defined in PREBEST.
2. The nodes must be included in the appropriate GROUP definitions, even though these nodes are not boundary points or sampling points.

PREBEST will detect any ‘‘free’’ nodes in a GMR and will be able to use them to define point sources or point forces during the PREBEST session.

9.3.14 OTHER MODELING CONSIDERATIONS

External Regions

External regions can be modeled and processed by PREBEST. This allows the ability to monitor sound in the far-field, monitor the temperature distribution in an infinite cylinder, etc. In such cases, the model does not have to extend far out and then be truncated, as is the case with finite element models. Only the boundary surfaces are modeled, and the mathematics of the boundary element method accounts for the behavior in the infinite region. No approximation or truncation is involved.

The user does not need to follow any special procedure for exterior problems. Just model the boundary surfaces as would normally be done for interior problems. When running PREBEST, the program will ask if this problem contains any exterior regions (GMRs). Answer ‘‘Yes.’’ While processing the GMRs, it will ask if the current GMR is an exterior region. Answer ‘‘Yes’’ as appropriate. The correct NORMal card will be generated by PREBEST, but it is worthwhile to check the normal direction of exterior regions in the GPBEST data file.

Since the user does not discretize the far-field, visualization of results there must be accomplished through sampling surfaces and sampling points. Refer to Sections 9.3.9 and 9.3.10 of this Manual for more information on defining sampling surfaces and sampling points.

Refer to the ‘‘EXTErior’’ card description in Section 5.3 of the GPBEST User’s Manual for more information on exterior (infinite) regions.

9.4 POSTBEST TRANSLATOR

9.4.1 POSTBEST FILES

POSTBEST requires a GPBEST neutral file as input. To begin a POSTBEST session, enter **postbest** at the system prompt. If the GPBEST system has been installed correctly, the operating system will be able to locate this program. POSTBEST then asks the user some questions. The user's answers help the program to translate the GPBEST neutral file into the desired model and results files.

POSTBEST creates several files while running:

1. A model file, containing the nodes, elements, and GMRs for the particular modeling program that the user chooses. GMRs are broken up into GROUPs, which can be viewed all together or viewed individually in the modeling program. In all cases, this model file is an ASCII file. When nodal tractions are requested, the model file will contain ''_NT'' as part of its name, signifying that this model file is only to be used to view the associated nodal traction results.
2. Results files, containing the appropriate results for the problem. In some modeling programs, such as I-DEAS and FEMAP, the results are included in the model file. In other programs such as PATRAN and HYPERMESH, results are written to separate files.
3. A log file, which contains error messages and summary information about the model being translated.

In some cases, the user may wish to view the model (geometry) contained in a GPBEST data file and not wish to view the results. This is often the case when debugging a model, or when viewing problems obtained from the GPBEST example problems. This can easily be done by inserting a CHECk card and a NEUTral card in the **CASE block of the GPBEST data file and running GPBEST. For 2-D models, be sure to remove the CONTour card from **CASE. The job will usually only take a few seconds to run. The resulting neutral file will contain only model entities, which can be translated by POSTBEST for viewing purposes.

Unlike the PREBEST program, POSTBEST does not create a ''session file'' containing user responses. This is because the number of questions that must be answered in a POSTBEST session are very limited. Many of the questions have default responses that can be used by merely hitting <CR> after the questions, thus keeping the user's involvement to a minimum.

9.4.2 RENUMBERING ENTITIES

While POSTBEST is running, it will ask if the user wants to renumber entities. Responding with a 'N'o will leave all nodes and elements in their original order. Responding with a 'Y'es will renumber all nodes and elements, starting with 1, 2, 3, ... There are some implications that need to be considered in this regard. Refer to Section 9.3.8.3 in this manual for more information.

If the original model contains unique node and element numbers at all interfaces (which is the recommended approach), then the user should choose NOT to renumber entities in POSTBEST. The original node and element numbers will be retained.

If the original model contains a single row of node and elements at an interface (which are referenced by both GMRs on each side of the interface), the user should choose to renumber entities in POSTBEST. In this case, renumbering will create a second set of nodes and elements at the interfaces.

Refer to Section 9.3.8.3 in this manual for more information.

9.4.3 NODAL TRACTIONS

Usually, the standard results (i.e., displacements, stresses, etc.) post-processed from a GPBEST run are sufficient to determine the behavior of a model to the applied loads, etc. However, for certain problems, it makes more sense to view the nodal tractions separately. This is especially true when working with contact interfaces, where the contact pressure can vary substantially from one element to another. Merely viewing stress results for these situations may smooth out the results, due to the repeated averaging that takes place in FEM-based post-processors. For these special cases, nodal tractions can be used advantageously.

Nodal tractions are actually the resulting tractions (including pressure) computed from the GPBEST run on each element at each node on the element. For this reason, nodal tractions are not unique at any given node. Each element can produce a unique nodal traction at the specified node. Hence, a special boundary element model and a special results file is needed to post-process nodal tractions. (Nodal traction processing is merely a post-processing operation handled by the POSTBEST translator. The user does not need to submit a special GPBEST run to view nodal traction results.) Hence, the POSTBEST translator will prompt the user with a question asking if the user wants nodal traction results processed. Usually the user will respond with a ‘‘No’’. However, if nodal tractions are desired, then ‘‘Yes’’ is given in response to the question. It must be clearly understood that nodal traction results and post-processing models can only be used for this special purpose. To post-process conventional results, such as displacements and stresses, do not request nodal traction results.

A point must be made about node numbering of nodal traction results. Since the nodal tractions are not unique at a given node, a new post-processing model must be created which introduces new node numbers which are unique. The lowest numbered node is always left alone, while other node numbers are created with a sequence such as 400001, 400002, etc. Thus, if the user wants to determine the original node number (in the GPBEST data file) at a given location they should zoom in on the location and list all nodes in the vicinity. The lowest numbered node is the original node number.

A nodal traction run must by necessity create new node numbers (element numbers are left intact), so a re-sequencing of node numbers results. However, be aware that this is a different issue from the earlier question, where POSTBEST asks if it is desired to re-sequence the nodes and elements in the model. If the user answers ‘‘Yes’’ in response to the earlier question, then all nodes and elements will be in sequence from 1, 2, 3, ... etc. No gaps will appear in the node and element numbering sequence. When processing nodal tractions by POSTBEST, most often the time the user will not want to re-sequence node and element numbers in response to the earlier question. However, if needed, they can re-sequence. If they do re-sequence, then they lose the ability to determine the original node and element numbers that were used in the GPBEST data file.

While fringe plots for stress are normally quite smooth, fringe plots for normal traction results are often discontinuous. This is because no smoothing occurs at nodes. Every nodal traction result is

uniquely defined over each element so it is possible to have discontinuous fringe plots. However, this has the advantage of allowing the user to see exactly how results are varying from element to element, especially in problems involving contact pressure.

9.4.4 GPBEST DATA FILE CONSIDERATIONS

It is worthwhile to mention how several cards in the GPBEST data file affect POSTBEST processing.

First of all, the NEUTral card must be included in **CASE, because it is required to generate the GPBEST neutral file. POSTBEST must be able to read a GPBEST neutral file as input. The PREBEST translator includes the NEUTral card by default.

The CHECk card can be included in **CASE if you wish to place model entities in the GPBEST neutral file. Results are not written out in a CHECk run, but the model is.

First, the use of the CONTour card will be discussed for 2-D analysis. The CONTour card can be included or omitted from **CASE, depending on what you intend. If the CONTour card is omitted from **CASE, GPBEST will only place the original 2-D model entities in the GPBEST neutral file. This will include only the boundary elements, nodes and GMRs. The user will not be able to post-process any results in the interior of the mesh since there is no mesh there. Only entities and results on the boundary will be visible.

However, if the CONTour card is included in **CASE, GPBEST will not place the original 2-D model entities in the neutral file. Instead, it will automatically generate an interior mesh so the user can post-process the interior stresses, deflections, etc. The mesh that appears is not used by GPBEST in the solution phase. It is merely generated after the boundary element model has been solved for the sake of convenience.

The comments about the CONTour card in 2-D also apply for axisymmetric models.

The effect of the CONTour card on 3-D analysis is somewhat different. It is only relevent when discussing Line (Hole) elements. If the CONTour card is included, a 3-D surface is automatically generated inside any Line element for post-processing purposes. This allows the user to visualize the results inside the Line (Hole). Omitting the CONTour card in a 3-D analysis will result in Line (Hole) elements being ignored.

The PREBEST translator includes the CONTour card in the GPBEST data file that it creates by default.

In generalized axisymmetric problems, one half of the body (180°) is generated with the corresponding results. However, if you just want to view the original model (nodes, elements, and GMRs) in your modeling program, include a CHECk card in **CASE. No results will be generated, but the original model can be viewed and checked.

9.4.5 GPBEST RESULTS

The POSTBEST program will translate GPBEST results into the result format needed by the modeling program. The type of results that are translated depend on the particular analysis being run, the modeling program being used, and the results that the user chooses to translate. For example, I-DEAS calculates some results internally, so some result columns are not needed in the result file. For the other programs (PATRAN, HYPERMESH, and FEMAP), all of the result columns are available. Also, plastic strains are only available for PLASticity problems, and temperature and heat flux are the primary results available for HEAT transfer problems. For frequency response problems, such as FORCed response and PERIODIC ACOUstics, real, imaginary, and modulus results are available.

Tables 9.4.5.1, 9.4.5.2, 9.4.5.3, and 9.4.5.4 list the various results available from a POSTBEST run. These are provided to give the user a sense of the results that can be used in the post-processing phase.

Table 9.4.5.1 Nodal Results

Result Column	Description
1	Temperature/(Pore) Pressure (θ) or (p)
2	Displacement component 1 (u_x) or (u_r)
3	Displacement component 2 (u_y) or (u_z)
4	Displacement component 3 (u_z) or (u_θ)
5	Stress component - 11 (σ_{xx}) or (σ_{rr})
6	Stress component - 22 (σ_{yy}) or (σ_{zz})
7	Stress component - 33 (σ_{zz}) or ($\sigma_{\theta\theta}$)
8	Stress component - 12 (σ_{xy}) or (σ_{rz})
9	Stress component - 13 (σ_{xz}) or ($\sigma_{r\theta}$)
10	Stress component - 23 (σ_{yz}) or ($\sigma_{\theta z}$)
11	Equivalent Stress (σ_{eq})
12	Principal Stress component - 1 (σ_1)
13	Principal Stress component - 2 (σ_2)
14	Principal Stress component - 3 (σ_3)
15	Strain component - 11 (ϵ_{xx}) or (ϵ_{rr})
16	Strain component - 22 (ϵ_{yy}) or (ϵ_{zz})
17	Strain component - 33 (ϵ_{zz}) or ($\epsilon_{\theta\theta}$)
18	Strain component - 12 (ϵ_{xy}) or (ϵ_{rz})
19	Strain component - 13 (ϵ_{xz}) or ($\epsilon_{r\theta}$)
20	Strain component - 23 (ϵ_{yz}) or ($\epsilon_{\theta z}$)
21	Equivalent Strain (ϵ_{eq})
22	Principal Strain component - 1 (ϵ_1)
23	Principal Strain component - 2 (ϵ_2)
24	Principal Strain component - 3 (ϵ_3)
25	GMR number
26	Plastic strain component - 11 (ϵ^p_{xx}) or (ϵ^p_{rr})
27	Plastic strain component - 22 (ϵ^p_{yy}) or (ϵ^p_{zz})
28	Plastic strain component - 33 (ϵ^p_{zz}) or ($\epsilon^p_{\theta\theta}$)
29	Plastic strain component - 12 (ϵ^p_{xy}) or (ϵ^p_{rz})
30	Plastic strain component - 13 (ϵ^p_{xz}) or ($\epsilon^p_{r\theta}$)
31	Plastic strain component - 23 (ϵ^p_{yz}) or ($\epsilon^p_{\theta z}$)
32	Equivalent plastic strain (ϵ^p_{eq})
33	Principal plastic strain component - 1 (ϵ^p_1)
34	Principal plastic strain component - 2 (ϵ^p_2)
35	Principal plastic strain component - 3 (ϵ^p_3)

Table 9.4.5.2 Element Results

Result Column	Description
1	Normal velocity or flux
2	Global traction component (t_x)
3	Global traction component (t_y)
4	Global traction component (t_z)
5	Normal traction component (t_n)

Table 9.4.5.3 Nodal Traction Results

Result Column	Description
1	Pressure ($= -t_n$)
2	Global traction component (t_x)
3	Global traction component (t_y)
4	Global traction component (t_z)
5	Normal traction component (t_n)
6	Tangential traction magnitude (t_t)
7	Global traction norm (t_{rms})
8	Absolute value of pressure ($\|t_n\|$)

Table 9.4.5.4 Nodal Acoustic Results

Result Column	Description
1	Pressure (real)
2	Pressure (imaginary)
3	Pressure (modulus)
4	Pressure Level (dB)
5	Normal Intensity
6	Normal Intensity (dB)
7	Intensity-X
8	Intensity-Y
9	Intensity-Z
10	Intensity-X (dB)
11	Intensity-Y (dB)
12	Intensity-Z (dB)
13	Normal Velocity (real)
14	Normal Velocity (imaginary)
15	Normal Velocity (modulus)
16	Velocity-X (real)
17	Velocity-Y (real)
18	Velocity-Z (real)
19	Velocity-X (imaginary)
20	Velocity-Y (imaginary)
21	Velocity-Z (imaginary)
22	Velocity-X (modulus)
23	Velocity-Y (modulus)
24	Velocity-Z (modulus)
25	Energy Density
26	Energy Density (dB)

9.4.6 CONTROLLING RESULT OUTPUT

Some problems can generate massive amounts of result data. Eigenvalue analysis, frequency response analysis, nonlinear analysis and transient analysis problems can all generate voluminous result data. For a large problem, the GPBEST neutral file can swell to 300Mb or larger. Disk space may run out in the process of running a GPBEST job. In addition, POSTBEST duplicates the numerous results when it translates them into the modeling program format. Some users may experience significant waiting periods while POSTBEST runs and while the modeling program (I-DEAS, etc.) loads up the results files.

There are several methods available to control the amount of results that are output. First, in the GPBEST data file there are several **CASE cards that control output. Refer to Section 5.1 of the GPBEST User's Manual. The NEUTral card and its various forms can be used to control specific types of data and results that are written to the GPBEST neutral file. The PRINTout-control card, the TIMEs-output card, the FREQuency-output card, the FREQuency SWEEP card, the HISTory-quantities card, the EIGEnvalue-options SHIFT card, and the EIGEnvalue OUTPUT all control various aspects of result output. These control the output to the GPBEST printed output file, the GPBEST neutral file, the HISTORY file, etc. The user is encouraged to study these cards in Section 5.1 of the GPBEST User's Manual when dealing with large amounts of result data.

In addition to the above, POSTBEST also allows the user to control the translation of the results stored in the GPBEST neutral file. In a multi time-step job, the user is asked for a range of time-steps (or frequencies) to post-process. For example, the user may request to translate only time-steps 3 through 5 of a 20-step run. Also, the user can request that only certain results be post-processed. For example, the user may specify that only displacements and Von-Mises Stresses be translated. This drastically reduces the size of the results file.

9.5 PATRAN

PATRAN is a general purpose, 3-D Mechanical Computer Aided Engineering (MCAE) software system that uses interactive graphics to create engineering designs and perform results evaluation. It utilizes an open-ended ‘‘gateway’’ architecture that facilitates access to most design, analysis and manufacturing software programs. PATRAN was originally developed, supported, and maintained by PDA Engineering of California, but more recently is supported by The MacNeal-Schwendler Corporation (MSC).

PATRAN 2 is no longer supported by MSC. It is supported by the PREBEST and POSTBEST translators. However, the capabilities for this release of PATRAN are frozen. There will be no changes made in the future to support this release of PATRAN.

PATRAN 3 (covering releases 3,4,5,6, etc.) is currently supported by MSC and the Boundary Element Software Technology Corporation. Throughout this chapter, ‘‘PATRAN-3’’ refers to PATRAN releases 3 and subsequent releases.

9.5.1 PREBEST USING PATRAN

Currently there are two versions, PATRAN-2 and PATRAN-3, that are available. The neutral file format for both versions are almost identical. Therefore, the translation program is almost the same. The major difference lies in the manner in which the boundary conditions must be entered in the two versions. The procedure has been elaborately discussed in subsequent sections.

9.5.1.1 SUPPORTED PATRAN NEUTRAL FILE PACKETS

The supported PATRAN Neutral File packet types are listed below for the sake of convenience. If the user is experiencing trouble in attempting to translate a PATRAN neutral file, it is best to compare the PATRAN neutral file with this Table to confirm that the items being translated are supported. Unsupported packet numbers are permissible, but are ignored by PREBEST.

Table 9.5.1.1.1 Supported PATRAN Neutral File Packet Types

PATRAN Neutral File Packet Number	Packet Description
01	Node
02	Element
03	Material Properties
04	Element Properties
05	Coordinate System
06	Load/Boundary Condition
08	Boundary Condition
21	Named Component (GMR)
25	Title
26	Summary Data
99	End of File Flag

9.5.1.2 SUPPORTED PATRAN ELEMENTS

Tables 9.5.1.2.1 and 9.5.1.2.2 list the PATRAN directives to build GPBEST elements for 2-D and 3-D problems respectively.

Table 9.5.1.2.1 PATRAN Element Library (2-D)

PATRAN CFEG CODE	GPBEST Element Name
Boundary Elements	
BAR /2	Linear 2-noded surface element
BAR /3	Quadratic 3-noded surface element
Volume Cells	
TRI /3	Linear 3-noded volume cell
QUAD /4	Linear 4-noded volume cell
TRI /6	Quadratic 6-noded volume cell
QUAD /8	Quadratic 8-noded volume cell

NOTE : Nodal numbering sequence in PATRAN is different from GPBEST. Refer to the PATRAN Manual for the order used in PATRAN.

Table 9.5.1.2.2 PATRAN Element Library (3-D)

PATRAN CFEG CODE	GPBEST Element Name
Boundary Elements	
BAR /2 + PFEG parameter	2-noded hole element
BAR /3 + PFEG parameter	3-noded hole element
TRI /3	Linear 3-noded surface element
QUAD /4	Linear 4-noded surface element
TRI /6	Quadratic 6-noded surface element
QUAD /8	Quadratic 8-noded surface element
QUAD /9	Quadratic 9-noded surface element
Volume Cells	
TET /4	Linear 4-noded volume cell
WEDGE /6	Linear 6-noded volume cell
HEX /8	Linear 8-noded volume cell
TET /10	Quadratic 10-noded volume cell
WEDGE /15	Quadratic 15-noded volume cell
HEX /20	Quadratic 20-noded volume cell

NOTE:

1. Nodal numbering sequence in PATRAN is different from GPBEST. Refer to the PATRAN Manual for the order used in PATRAN.
2. The PFEG parameter mentioned above is applicable for PATRAN-2 only. Users of PATRAN-3 must input the radius value in the GPBEST data file manually.

Line (Hole) Elements

A line (hole) element in GPBEST is a two- or three-noded BAR element with a radius property parameter. Line elements are applicable to 3-D models only. To specify a Line (hole) element, a BAR (beam) element is first defined and stored in the appropriate GROUP.

Users of PATRAN-2 can input the radius of the hole element via the PFEG directive. For example, to create a three-noded hole element with a radius of 0.05 from a pre-defined line (ID 1), the following command must be used:

```
PFEG,1L,BAR/3, ''HOLE''/0.05,,1
```

Users of PATRAN-3 must input the hole element radius in the GPBEST data file.

9.5.1.3 MODELING GEOMETRY IN PATRAN

PATRAN is primarily designed for finite element modeling. At the same time, its features can also be used for efficient boundary element modeling. Generally, at first it is challenging to create GMRs within PATRAN and to maintain the interface compatibility among GMRs. The following are a few basic hints that may be helpful to the new user while modeling three-dimensional problems.

1. At the geometric level of the model-building process, the user should identify cutting planes or surfaces along which he/she intends to sub-structure the model into GMRs.
2. Before meshing the entire model, surfaces (patches) should be built on these interfaces. These surfaces (only at the interfaces) should be duplicated by performing a zero-translation copy.
3. The GROUPs, or ‘‘named components’’ are defined at this stage with one set of interface surfaces. Each group is meshed, taking care that the same elements are generated at a common interface on both surfaces of the groups to which that interface belongs. This can be achieved by using the same *mesh seed* on the bounding lines of the surfaces. The mesh of each group is stored or saved in the same groups.
4. At this stage, node-equivalencing is carried out one GROUP at a time. This method of creating the model will have interfaces with unique node and element IDs, which is the recommended approach.
5. The user may then proceed to define the material properties and element properties, and assign these to elements. Boundary conditions are also modeled, as described in a later section.

It must be emphasized that the above steps are not rigid in terms of model-building. They are merely a set of suggested guidelines. The user may pre-process data in any other convenient manner.

9.5.1.4 MODELING BOUNDARY CONDITIONS IN PATRAN

Boundary conditions in PATRAN are quite straight-forward if the methods of Section 9.3.12 are applied. However, some specifics for PATRAN are given in this section.

3-D Boundary Conditions in PATRAN-3

1. Look through Table 9.5.12.1 to identify the Load Set IDs that are applicable to your problem.
2. In PATRAN-3, when you are ready to start applying boundary conditions, select the menu-button 'Load Cases'. Create load cases with the set ID numbers that you have identified as the 'Load Case Name'.
3. At the end of step 2, the 'Existing Load Cases' window should display all the set IDs that you wish to use.
4. Select the 'Load/BCs' menu-button. Make appropriate selection so that you have the following setting:

$$\text{Action} \Longrightarrow \text{Create}$$
$$\text{Object} \Longrightarrow \text{Pressure}$$
$$\text{Type} \Longrightarrow \text{Element Uniform}$$
$$\text{Analysis Type} \Longrightarrow \text{Structural}$$
$$\text{Target Element Type} \Longrightarrow \text{2-D (i.e. shell elements)}$$

5. Click on the 'Current Load Case' box and make a selection from the list of set IDs.
6. Enter a name in the 'New Set Name' box.
7. Select 'Input Data' box and enter the value of the boundary condition in the 'Top Surf Pressure' box. You may enter a zero value. Ignore the other boxes for input.
8. Click on the 'Select Application Region' and make a selection of the elements or patches over which you intend to apply the boundary condition. Make sure that these elements or patches appear on the 'Application Region' window.
9. Finally, click on 'Apply' to complete definition of that particular boundary condition.
10. Repeat steps 5-9 for the other boundary condition sets.

2-D Boundary Conditions in PATRAN-3

1. Look through Table 9.5.12.2 to identify the Load Set IDs that are applicable for the problem.
2. In PATRAN-3, when you are ready to start applying boundary conditions, select the menu button 'Load Cases'. Create load cases with the set IDs that you have already identified in step 1 as the 'Load Case Name'.

3. At the end of step 2, the ‘Existing Load Cases’ window should display all the set IDs that you wish to use.
4. Select the ‘Load/BCs’ menu button. Make appropriate selections so that you have the following setting:

$$\text{Action} \Longrightarrow \text{Create}$$
$$\text{Object} \Longrightarrow \text{Displacement}$$
$$\text{Type} \Longrightarrow \text{Nodal}$$
$$\text{Analysis Type} \Longrightarrow \text{Structural}$$

5. Click on the ‘Current Load Case’ box and make a selection from the list of set IDs.
6. Enter a name in the ‘New Set Name’ box.
7. Select ‘Input Data . . .’ box and enter the value of the boundary condition in the ‘Translations’ box. You may enter a zero or a non-zero value. It is important to note that this value will correspond to the ‘T1’ value in PATRAN-3. Icons indicated in the global ‘1’ direction may show up. Though this may appear confusing, it has no bearing on the GPBEST boundary conditions sets that are generated by PREBEST. Ignore the other boxes for input.
8. Click on the ‘Select Application Region’ and turn the ‘FEM’ button on. Now select the nodes on which you wish to apply the boundary condition. It is important to note that you have to select all the nodes of a particular element in order to have the boundary condition applied to it. For example, if your model has 3-noded beam elements, you must select all 3 nodes in order to apply a boundary condition to that element. Make sure that the nodes you select appear on the ‘Application Region’ window.
9. Finally, click on ‘Apply’ to complete definition of that particular boundary condition set.
10. Repeat steps 5-9 for the other boundary condition sets.

Boundary Conditions in PATRAN-2

1. To apply a pressure (negative normal traction) of 500 over elements 5, 6, 7 and 8 which were generated from patch 11, the command is:

```
DFEG,P11,PRES/E,500,100
```

2. To apply a traction of 300 in the z-direction over the elements generated from patch 20, the command is:

```
DFEG,P20,PRES/E,//300,101
```

3. In a 2-D problem, a local tangential spring of magnitude 50 has to be applied over elements 2 and 3, which are two of all the elements generated from line 21. The command is:

```
DFEG,21L,PRES/E,/50,126,EL2T3
```

Note: It is apparent from the above examples that except for boundary conditions with set IDs 101, 104, 117 and 126, the value for all the others must be input in the first field of the ‘data’.

9.5.2 POSTBEST USING PATRAN

9.5.2.1 PATRAN RESULT FILES

When POSTBEST finishes translating each time-step, several files of the form PATRAN.XXX.n are created for result post-processing in PATRAN. The parameter 'n' is the time-step or frequency number, and XXX is any of the following:

- Real variable analysis:

  DIS - Boundary nodal displacements in the format of a PATRAN Displacement Results Data File

  NOD - Nodal temperature (or pore pressure), displacements, stresses and strains at all nodes (boundary and interior) in the format of a PATRAN Nodal Results Data File

  ELS - Element normal velocity, flux and traction in the format of a PATRAN Element Results Data File

  NOT - Normal tractions, in the format of a PATRAN Nodal Results Data File

- Complex variable analysis:

  DIR - Real part of boundary nodal displacements in the format of a PATRAN Displacements Results Data File

  DII - Imaginary part of boundary nodal displacements in the format of a PATRAN Displacements Results Data File

  DIM - Absolute value of boundary nodal displacements in the format of a PATRAN Displacements Results Data File

  NOR - Real part of nodal pressures, displacements, stresses and strains at all nodes (boundary and interior) in the format of a PATRAN Nodal Results Data File

  NOI - Imaginary part of nodal pressures, displacements, stresses and strains at all nodes (boundary and interior) in the format of a PATRAN Nodal Results Data File

  NOM - Absolute value of nodal pressures, displacements, stresses and strains at all nodes (boundary and interior) in the format of a PATRAN Nodal Results Data File

  ELR - Real part of element velocity, flux and traction in the format of PATRAN Element Results Data File

ELI - Imaginary part of element velocity, flux and traction in the format of PATRAN Element Results Data File

ELM - Absolute value of element velocity, flux and traction in the format of PATRAN Element Results Data File

Column assignments within each file are defined in Table 9.5.2.1.1. For a heat conduction analysis, the PATRAN.NOD.n file contains only one column where temperature information is stored. Similarly, for an acoustic analysis, the PATRAN.NOD.n file contains only one column where pressure information is stored. For all other types of analyses, PATRAN.NOD.n file contains 25 or 35 columns, depending on the type of problem. Note that PATRAN-3 can read in PATRAN-2 files.

Users of PATRAN-2 must refer to Table 9.5.2.1.1 for post-processing various results in order to find the column number for each type of result.

Table 9.5.2.1.2 lists the complex-valued results.

Table 9.5.2.1.1 PATRAN2 Post-processing File Column Definition
Real-Valued Results

GENERAL FILE DEFINITION:

Filename	PATRAN File Type	Contents
PATRAN.DIS.n	DISPLACEMENT	Boundary Source Points
PATRAN.NOD.n	NODAL	All Points
PATRAN.ELS.n	ELEMENTAL	All Boundary Elements
PATRAN.NOT.n	NODAL	All Points (Nodal Tractions)

NOMENCLATURE

θ: temperature
p: pore pressure
t_n: normal traction component
u_i: displacement
σ_{ij}: stress
ϵ_{ij}: strain

SPECIFIC FILE DEFINITION:

Filename	Column	Quantity
PATRAN.DIS.n*	1	Displacement component 1 (u_x) or (u_r)
	2	Displacement component 2 (u_y) or (u_z)
	3	Displacement component 3 (u_z) or (u_θ)
PATRAN.NOD.n**	1	Temperature/(Pore) Pressure (θ) or (p)
	2	Displacement component 1 (u_x) or (u_r)
	3	Displacement component 2 (u_y) or (u_z)
	4	Displacement component 3 (u_z) or (u_θ)
	5	Stress component - 11 (σ_{xx}) or (σ_{rr})
	6	Stress component - 22 (σ_{yy}) or (σ_{zz})
	7	Stress component - 33 (σ_{zz}) or ($\sigma_{\theta\theta}$)
	8	Stress component - 12 (σ_{xy}) or (σ_{rz})
	9	Stress component - 13 (σ_{xz}) or ($\sigma_{r\theta}$)
	10	Stress component - 23 (σ_{yz}) or ($\sigma_{\theta z}$)
	11	Equivalent Stress (σ_{eq})
	12	Principal Stress component - 1 (σ_1)

	13	Principal Stress component - 2 (σ_2)
	14	Principal Stress component - 3 (σ_3)
	15	Strain component - 11 (ϵ_{xx}) or (ϵ_{rr})
	16	Strain component - 22 (ϵ_{yy}) or (ϵ_{zz})
	17	Strain component - 33 (ϵ_{zz}) or ($\epsilon_{\theta\theta}$)
	18	Strain component - 12 (ϵ_{xy}) or (ϵ_{rz})
	19	Strain component - 13 (ϵ_{xz}) or ($\epsilon_{r\theta}$)
	20	Strain component - 23 (ϵ_{yz}) or ($\epsilon_{\theta z}$)
	21	Equivalent Strain (ϵ_{eq})
	22	Principal Strain component - 1 (ϵ_1)
	23	Principal Strain component - 2 (ϵ_2)
	24	Principal Strain component - 3 (ϵ_3)
	25	GMR number*
	26	Plastic strain component - 11 (ϵ^p_{xx}) or (ϵ^p_{rr})
	27	Plastic strain component - 22 (ϵ^p_{yy}) or (ϵ^p_{zz})
	28	Plastic strain component - 33 (ϵ^p_{zz}) or ($\epsilon^p_{\theta\theta}$)
	29	Plastic strain component - 12 (ϵ^p_{xy}) or (ϵ^p_{rz})
	30	Plastic strain component - 13 (ϵ^p_{xz}) or ($\epsilon^p_{r\theta}$)
	31	Plastic strain component - 23 (ϵ^p_{yz}) or ($\epsilon^p_{\theta z}$)
	32	Equivalent plastic strain (ϵ^p_{eq})
	33	Principal plastic strain component - 1 (ϵ^p_1)
	34	Principal plastic strain component - 2 (ϵ^p_2)
	35	Principal plastic strain component - 3 (ϵ^p_3)
PATRAN.ELS.n***	1	Normal velocity or flux
	2	Global traction component (t_x)
	3	Global traction component (t_y)
	4	Global traction component (t_z)
	5	Normal traction component (t_n)
PATRAN.NOT.n**	1	Pressure ($= -t_n$)
	2	Global traction component (t_x)
	3	Global traction component (t_y)
	4	Global traction component (t_z)
	5	Normal traction component (t_n)
	6	Tangential traction magnitude (t_t)
	7	Global traction norm (t_{rms})
	8	Absolute value of pressure ($\|t_n\|$)

* This value is the GMR number according to the order as it appears in the data set. This value can be used in a PATRAN fringe plot for easy recognition of region breakup by color coding.

Table 9.5.2.1.2 PATRAN2 Post-processing File Column Definition Complex-Valued Results

GENERAL FILE DEFINITION:

Filename	PATRAN File Type	Contents
PATRAN.DI?.n	DISPLACEMENT	Boundary Source Points
PATRAN.NO?.n	NODAL	All Points
PATRAN.EL?.n	ELEMENTAL	All Boundary Elements

NOMENCLATURE

θ: temperature
p: pore pressure
t_n: normal traction component
u_i: displacement
σ_{ij}: stress
ϵ_{ij}: strain

SPECIFIC FILE DEFINITION:

Filename	Column	Quantity
PATRAN.DI?.n	1	Displacement component 1 (u_x) or (u_r)
	2	Displacement component 2 (u_y) or (u_z)
	3	Displacement component 3 (u_z) or (u_θ)
PATRAN.NO?.n	1	Temperature/(Pore) Pressure (θ) or (p)
	2	Displacement component 1 (u_x) or (u_r)
	3	Displacement component 2 (u_y) or (u_z)
	4	Displacement component 3 (u_z) or (u_θ)
	5	Stress component - 11 (σ_{xx}) or (σ_{rr})
	6	Stress component - 22 (σ_{yy}) or (σ_{zz})
	7	Stress component - 33 (σ_{zz}) or ($\sigma_{\theta\theta}$)
	8	Stress component - 12 (σ_{xy}) or (σ_{rz})
	9	Stress component - 13 (σ_{xz}) or ($\sigma_{r\theta}$)
	10	Stress component - 23 (σ_{yz}) or ($\sigma_{\theta z}$)
	15	Strain component - 11 (ϵ_{xx}) or (ϵ_{rr})
	16	Strain component - 22 (ϵ_{yy}) or (ϵ_{zz})
	17	Strain component - 33 (ϵ_{zz}) or ($\epsilon_{\theta\theta}$)
	18	Strain component - 12 (ϵ_{xy}) or (ϵ_{rz})

	19	Strain component - 13 (ϵ_{xz}) or ($\epsilon_{r\theta}$)
	20	Strain component - 23 (ϵ_{yz}) or ($\epsilon_{\theta z}$)
	25	GMR number*
PATRAN.EL?.n	1	Normal velocity or flux
	2	Global traction component (t_x)
	3	Global traction component (t_y)
	4	Global traction component (t_z)

Additional Information:

In the nodal results files, the values for columns 11 to 14 and 21 to 24 are set to zero.

? This symbol stands for R, I and M indicating that the corresponding files contain real, imaginary or magnitude values of results.

* This value is the GMR number according to the order as it appears in the data set. This value can be used in a PATRAN fringe plot for easy recognition of region breakup by color-coding.

9.5.2.2 PATRAN-3 RESULT TEMPLATE FILES

Users of PATRAN-3 must copy some template files provided with the GPBEST distribution to the /res_templates directory of their PATRAN installation directory. This allows PATRAN to label the columns of GPBEST results with descriptive names.

It may be that the system administrator may have to copy these files, since they likely reside in a system area on the disk. A command similar to this may be used (but adapted for the user's system):

```
cp /usr/local/gpbest/templates/*tmpl   /msc/patran/res_templates/.
```

The template files are:

gpbest_dis.res_tmpl

gpbest_nod.res_tmpl

gpbest_acou_nod.res_tmpl

gpbest_els.res_tmpl

gpbest_not.res_tmpl

During post-processing of results, the user must select one of these files before reading in the PATRAN.XXX.n file. The contents of these files are shown in the rest of this section. For an example of this procedure, refer to the Quick-Start Manual.

File gpbest_dis.res_tmpl for PATRAN.DIS files

```
KEYLOC = 0

TYPE = vector
COLUMN = 1, 2, 3
PRI = Deformations
SEC = Displacements
CTYPE = global

TYPE = END
```

File gpbest_nod.res_tmpl for PATRAN.NOD files

```
KEYLOC = 0

TYPE = scalar
COLUMN = 1
PRI = Temperature
SEC = Thermal Analysis
```

```
TYPE = vector
COLUMN = 2, 3, 4
PRI = Displacement
SEC = Components
CTYPE = GLOBAL

TYPE = tensor
COLUMN = 5, 6, 7, 8, 10, 9
PRI = Stress
SEC = Components
CTYPE = element

TYPE = scalar
COLUMN = 11
PRI = Equivalent (Von Mises)
SEC = Stress

TYPE = scalar
COLUMN = 12
PRI = Major Principal Stress
SEC = (Component 1)

TYPE = scalar
COLUMN = 13
PRI = Intermediate Principal Stress
SEC = (Component 2)

TYPE = scalar
COLUMN = 14
PRI = Minor Principal Stress
SEC = (Component 3)

TYPE = tensor
COLUMN = 15, 16, 17, 18, 20, 19
PRI = Strain
SEC = Components
CTYPE = element

TYPE = scalar
COLUMN = 21
PRI = Equivalent
SEC = Strain

TYPE = scalar
COLUMN = 22
```

```
PRI = Major Principal Strain
SEC = (Component 1)

TYPE = scalar
COLUMN = 23
PRI = Intermediate Principal Strain
SEC = (Component 2)

TYPE = scalar
COLUMN = 24
PRI = Minor Principal Strain
SEC = (Component 3)

TYPE = scalar
COLUMN = 25
PRI = GMR
SEC = Number

TYPE = tensor
COLUMN = 26,27,28,29,31,30
PRI = Plastic Strain
SEC = Components
CTYPE = element

TYPE = scalar
COLUMN = 32
PRI = Equivalent
SEC = Plastic Strain

TYPE = scalar
COLUMN = 33
PRI = Major Principal Plastic Strain
SEC = (Component 1)

TYPE = scalar
COLUMN = 34
PRI = Intermediate Principal Plastic Strain
SEC = (Component 2)

TYPE = scalar
COLUMN = 35
PRI = Minor Principal Plastic Strain
SEC = (Component 3)

TYPE = END
```

File gpb_acou_nod.res_tmpl for PATRAN.NOD files

(To be used for post-processing acoustic results)

```
KEYLOC = 0

TYPE = scalar
COLUMN = 1
PRI = Pressure
SEC = Real

TYPE = scalar
COLUMN = 2
PRI = Pressure
SEC = Imaginary

TYPE = scalar
COLUMN = 3
PRI = Pressure
SEC = Magnitude

TYPE = scalar
COLUMN = 4
PRI = Pressure
SEC = Magnitude (dB)

TYPE = scalar
COLUMN = 5
PRI = Normal Intensity
SEC = Real

TYPE = scalar
COLUMN = 6
PRI = Normal Intensity
SEC = Magnitude (dB)

TYPE = vector
COLUMN = 7, 8, 9
PRI = Intensity
SEC = Real
CTYPE = GLOBAL

TYPE = vector
COLUMN = 10, 11, 12
PRI = Intensity
SEC = Magnitude (dB)
```

```
CTYPE = GLOBAL

TYPE = scalar
COLUMN = 13
PRI = Normal Velocity
SEC = Real

TYPE = scalar
COLUMN = 14
PRI = Normal Velocity
SEC = Imaginary

TYPE = scalar
COLUMN = 15
PRI = Normal Velocity
SEC = Magnitude

TYPE = vector
COLUMN = 16, 17, 18
PRI = Velocity
SEC = Real
CTYPE = GLOBAL

TYPE = vector
COLUMN = 19, 20, 21
PRI = Velocity
SEC = Imaginary
CTYPE = GLOBAL

TYPE = vector
COLUMN = 22, 23, 24
PRI = Velocity
SEC = Magnitude
CTYPE = GLOBAL

TYPE = scalar
COLUMN = 25
PRI = Energy Density
SEC = Real

TYPE = scalar
COLUMN = 26
PRI = Energy Density
SEC = Magnitude (dB)
```

```
TYPE = END
```

File gpbest_els.res_tmpl

(To be used for post-processing element results)

```
KEYLOC = 0

TYPE = scalar
COLUMN = 1
PRI = Flux / Velocity
SEC = Thermal or Acoustic Analysis

TYPE = vector
COLUMN = 2, 3, 4
PRI = Traction
SEC = Global Components

TYPE = scalar
COLUMN = 5
PRI = Traction
SEC = Normal Component

TYPE = END
```

File gpbest_not.res_tmpl for PATRAN.NOT files

(To be used for post-processing nodal traction results)

```
KEYLOC = 0

TYPE = scalar
COLUMN = 1
PRI = Pressure
SEC = Stress

TYPE = vector
COLUMN = 2, 3, 4
PRI = Tractions
SEC = Components
CTYPE = GLOBAL

TYPE = scalar
COLUMN = 5
PRI = Normal Traction
SEC = Stress

TYPE = scalar
COLUMN = 6
PRI = Tangential Traction
SEC = Stress

TYPE = scalar
COLUMN = 7
PRI = RMS Magnitude of Traction
SEC = Stress

TYPE = scalar
COLUMN = 8
PRI = Absolute Value of Pressure
SEC = Stress

TYPE = END
```

9.6 I-DEAS

I-DEAS is an integrated Mechanical Computer Aided Engineering (MCAE) software system that uses interactive graphics to create engineering design and results evaluation. It provides full function design, testing and NC programming for mechanical design and automation. It is developed, supported, and maintained by Structural Dynamics Research Corporation, Milford, Ohio.

The original version of I-DEAS that was supported by GPBEST translators was I-DEAS VI. This is still available. However, the support for this version has been frozen. No changes to the translators will be made for this version in the future.

I-DEAS MS 7 is the latest version supported by PREBEST.

9.6.1 PREBEST USING I-DEAS

It is assumed that the user is familiar with I-DEAS. Therefore, only details relevant to the use of the interface PREBEST will be provided in this section. In addition, it must be pointed out that since I-DEAS creates models for use within a finite element environment, special steps must be adopted to make the data usable by PREBEST and GPBEST.

9.6.1.1 SUPPORTED I-DEAS UNIVERSAL FILE BLOCKS

Table 9.6.1.1.1 Supported I-DEAS Universal File Dataset Types

I-DEAS Universal File Dataset Number	Dataset Description
15 / 781 / 2411	Node
151	Title
752 / 2417 / 2429 / 2430 / 2432 / 2435	Permanent Groups (GMR)
773 / 1710	Material Properties
775 / 776	Beam Properties
780 / 2412	Element
782 / 790	Element Load/Boundary Condition
791	Nodal Boundary Condition
18 / 2420	Coordinate System

9.6.1.2 SUPPORTED I-DEAS ELEMENTS

Tables 9.6.1.2.1 and 9.6.1.2.2 list the elements that can be used in I-DEAS.

Table 9.6.1.2.1 I-DEAS Element Library (2-D)

I-DEAS ELEMENT-TYPE / NODES	GPBEST Element Name
Boundary Elements	
21 / 2	Linear 2-noded surface element
24 / 3	Quadratic 3-noded surface element
Volume Cells	
91 / 3	Linear 3-noded surface element
94 / 4	Linear 4-noded surface element
92 / 6	Quadratic 6-noded surface element
95 / 8	Quadratic 8-noded surface element

Table 9.6.1.2.2 I-DEAS Element Library (3-D)

I-DEAS ELEMENT-TYPE / NODES	GPBEST Element Name
Boundary Elements	
21 / 2	Linear 2-noded hole element
24 / 3	Quadratic 3-noded hole element
91 / 3	Linear 3-noded surface element
94 / 4	Linear 4-noded surface element
92 / 6	Quadratic 6-noded surface element
95 / 8	Quadratic 8-noded surface element
Volume Cells	
111 / 4	Linear 4-noded volume cell
112 / 6	Linear 6-noded volume cell
115 / 8	Linear 8-noded volume cell
118 / 10	Quadratic 10-noded volume cell
113 / 15	Quadratic 15-noded volume cell
116 / 20	Quadratic 20-noded volume cell

NOTE : Unlike PATRAN, the sequence of nodal definition in I-DEAS is identical to the one used in GPBEST.

Line (Hole) Elements

It is possible to define Line (hole) elements in a 3-D model within I-DEAS. A Line (hole) element in GPBEST is a two- or three-noded beam element with a radius property. To specify a hole element, a beam element is first defined and stored in the appropriate GROUP. They may be unconnected elements lying within the problem domain. The user must then input the hole element radius by manually editing the GPBEST data file.

9.6.1.3 MODELING GEOMETRY IN I-DEAS

I-DEAS is an integrated CAD package that is primarily designed for finite element modeling. However, it has enough features that it can be utilized for efficient boundary element modeling. In I-DEAS, the usage of solid-model primitives for building parts is greatly emphasized. Therefore, when a solid model is built in I-DEAS or is imported from another solid-modeler, it contains *volumes* associated with parts. These volumes can be very conveniently used for the purpose of sub-structuring the model into GMRs. It should also be mentioned that these volumes are associated with the bounding surfaces of which they are made. Generally, the new user finds it difficult to create GMRs within I-DEAS and to maintain the interface compatibility among GMRs. Based on the observations just stated, the following are a few basic hints that may be of some help while modeling 3-D problems.

1. From the solid model, the user should identify *volumes* to be used as GMRs. If the model contains too many small *volumes*, then some of them can be merged judiciously to have an appropriate GMR break-up. On the other hand, sometimes the entire model may be defined as one model. If substructuring of such a problem is required, then the single volume may be subdivided by passing *cutting planes* as necessary. At this stage, one set of surfaces on the interface, (i.e., junction of volumes) already exists.

2. Use of *Free Mesh* capability of I-DEAS is made to mesh all the surfaces of the volumes including the interface surfaces. This might sometimes produce unnecessarily dense meshes in certain areas. To avoid that, one can use a *Mapped Mesh* in those particular areas, taking care of the compatibility with adjacent surfaces. At the end of this stage, the entire model is meshed with a single set of elements and nodes on the interfaces.

3. Next, the GMRs must be physically defined via the *PERMANENT GROUPs* facility. The process of grouping is essentially selecting sets of nodes and elements belonging to certain *volumes* and naming them. No other entities need to be grouped. The following schematically represents the sequence of commands to be executed for creating the groups:

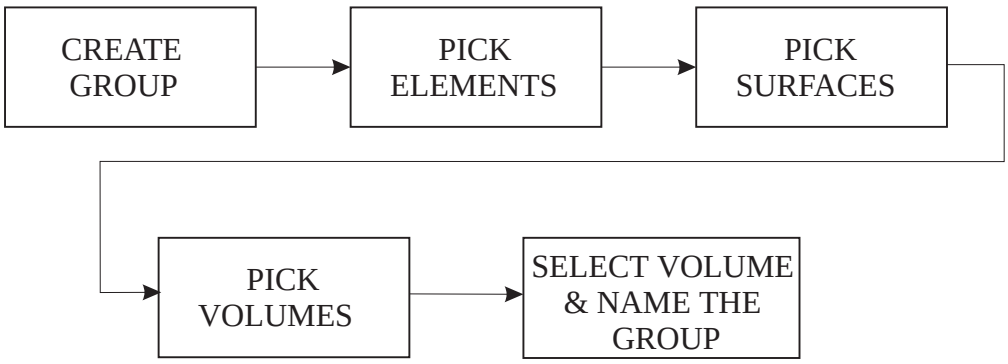

This process will group the elements. Next, the nodes belonging to that volume need to be grouped:

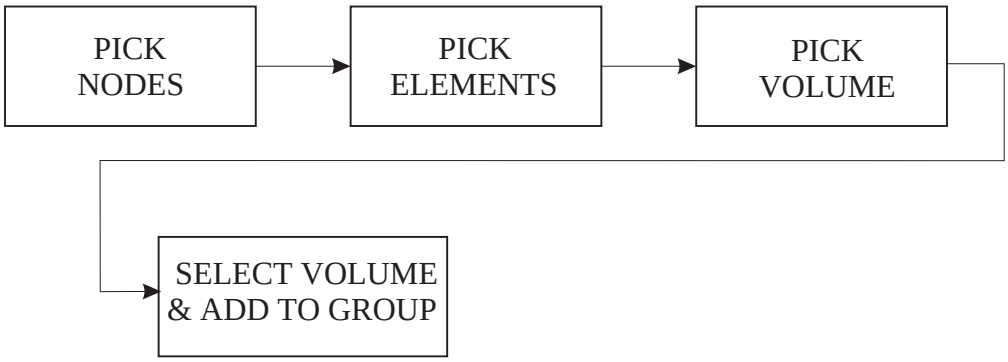

The methodology mentioned above produces non-unique nodes and elements at the interfaces. This is perfectly acceptable for GPBEST. While post-processing however, the user *must* renumber the nodes and elements during the POSTBEST session because these nodes will have two sets of results associated with them (see Section 9.3.8.3). The I-DEAS Universal file generated after a POSTBEST session must therefore be read in as a new FE-model.

4. Once the mesh and groups are created, then proceed to define material properties, assign property IDs, and apply boundary conditions.

5. The boundary conditions applied over elements do not need to be saved in the groups. PREBEST automatically sorts all the pertinent information and assigns them proper GMR names.

It must be emphasized that the above steps are not rigid in terms of model-building. They are merely a set of suggested guidelines. Within I-DEAS there are usually various paths available to achieve the same result. The user may pre-process data in any other convenient manner.

9.6.1.4 SCALING OF DIMENSIONS IN I-DEAS

A special explanation is required in regard to units used in I-DEAS. I-DEAS allows users the freedom to specify any set of units they choose to work with. On the surface, this may seem to be an extremely useful feature. However, there is a serious drawback. Internally, I-DEAS stores *all* data in SI (Meter-Newton) units. More importantly, when exporting data for use with other programs, I-DEAS converts everything into SI units, even if that is not what was intended.

We are assuming that users can keep track of their own units. The user should decide on a consistent set of units, such as mm-Newton-sec. It may be helpful to refer to Appendix B in the manual ''Introduction to GPBEST: Elastic Analysis,'' where preferred sets of units are presented. *However, in order to tell I-DEAS to turn off the units conversion, you must specify SI as the units you want to work with in I-DEAS.* Even if you work with inches-point-force-sec, you should still tell I-DEAS that you are going to be working in SI. This is accomplished in the Options / Units menu. This turns off all scaling, which is the recommended approach. However, use your own units whenever entering dimensions, material properties, pressures, etc. in I-DEAS. As long as you pick a consistent set of units, everything will be correct.

Due to the inherent problems with unit conversion, we strongly recommend the above approach. As a consequence, answer ''No'', which is the default response, to the requests by PREBEST and POSTBEST regarding scaling of dimensions. It is not recommended that users respond ''Yes'' to this question unless the resulting dimensions, results, etc. are thoroughly checked.

In summary, it is recommended that I-DEAS users:

1. Select a consistent set of units and use them throughout the model-building and results post-processing phases.
2. Specify ''SI'' units in I-DEAS, even though you are using your own set of units. This turns off the scaling of dimensions by I-DEAS.
3. Tell PREBEST and POSTBEST *Not* to scale the model or results.

9.6.2 POSTBEST USING I-DEAS

9.6.2.1 I-DEAS RESULTS

The following Tables summarize the GPBEST results available in I-DEAS.

Table 9.6.2.1.1 IDEAS-VI Post-processing Parameter Definition (Nodal Results)
Universal File Dataset Type : 55

Records 1 - 5	ID Lines	
Record 6	Field 1 =	1 (Structural for Elastic Analysis)
	Field 1 =	2 (Heat Transfer or Acoustic Analysis)
	Field 2 =	4 (Transient Analysis)
	Field 2 =	5 (Frequency Response)
	Field 3 =	1 (Scalar for Temperature/Potential)
	Field 3 =	2 (for Displacement)
	Field 3 =	4 (for Stress and Strain)
	Field 4 =	2 (Stress)
	Field 4 =	3 (Strain)
	Field 4 =	5 (Temperature/Potential/Pressure)
	Field 4 =	8 (Displacement)
	Field 5 =	2 (Real)
	Field 5 =	5 (Complex)
	Field 6 =	Number of data values at each node (NDV)
Record 7	Field 1 =	2
	Field 2 =	1
	Field 3 =	Load Case Number
	Field 4 =	Time Step or Frequency Step Number
Record 8	Field 1 =	Time or Frequency Value
Record 9	Field 1 =	Node Number
Record 10	Field 1 =	Value of data for node number in Record 9*

The post-processing is carried within I-DEAS in the usual manner. The user is referred to the documentation with I-DEAS for the guidelines for post-processing FEM results.

* For complex data, there will be 2*NDV data lines at each node. The order is: real part for value 1, imaginary part for value 1, etc. for all points.

Table 9.6.1.2.2 IDEAS-VI Post-processing Parameter Definition (Elemental Results)
Universal File Dataset Type : 56

Records 1 - 5	ID Lines	
Record 6	Field 1 =	1 (Structural for Elastic Analysis)
	Field 1 =	2 (Heat Transfer or Acoustic Analysis)
	Field 2 =	4 (Transient Analysis)
	Field 2 =	5 (Frequency Response)
	Field 3 =	1 (Scalar for Normal Velocity/Flux /Traction)
	Field 4 =	1 (Global and Normal Traction Component)
	Field 4 =	6 (Heat Flux)
	Field 4 =	11 (Velocity)
	Field 5 =	2 (Real)
	Field 5 =	5 (Complex)
	Field 6 =	Number of data values at each element (NDV)
Record 7	Field 1 =	2
	Field 2 =	1
	Field 3 =	Load Case Number
	Field 4 =	Time Step or Frequency Step Number
Record 8	Field 1 =	Time or Frequency Value
Record 9	Field 1 =	Element Number
Record 10	Field 1 =	Value of data for element number in Record 9*

The post-processing is carried within I-DEAS in the usual manner. The user is referred to the documentation with I-DEAS for the guidelines for post-processing FEM results.

* For complex data, there will be 2*NDV data lines at each element. The order is: real part for value 1, imaginary part for value 1, etc. for all elements.

Table 9.6.1.2.3 IDEAS-MS Post-processing Parameter Definition
Universal File Dataset Type : 2414

Record 1	Field 1 =	Load Case Number (1,2,3, etc.)
Record 2	Field 1 =	GPBEST RESULTS
Record 3	Field 1 =	1 (Data at Nodes)
	Field 1 =	2 (Data on Elements)
Records 4-8	ID Lines	
Record 9	Field 1 =	1 (Structural for Elastic Analysis)
	Field 1 =	2 (Heat Transfer or Acoustic Analysis)
	Field 2 =	4 (Transient Analysis)
	Field 2 =	5 (Frequency Response)
	Field 3 =	1 (Scalar for Temperature/Potential/Velocity/Traction)
	Field 3 =	2 (for Displacement)
	Field 3 =	4 (for Stress and Strain)
	Field 4 =	2 (Stress)
	Field 4 =	3 (Strain)
	Field 4 =	6 (Heat Flux)
	Field 4 =	5 (Temperature/Potential/Pressure)
	Field 4 =	8 (Displacement)
	Field 4 =	11 (Velocity)
	Field 4 =	94 (Local Traction)
	Field 4 =	95 (Global Traction)
	Field 5 =	2 (Real)
	Field 5 =	5 (Complex)
	Field 6 =	Number of data values at each node (NDV)
	Field 6 =	Number of data values each element (NDV)
Record 10	Field 1 =	Time Step on Frequency Step Number
Record 11	Field 1 =	0
Record 12	Field 1 =	Time or Frequency Value

Record 13	Field 1 =	0.0 (Not applicable)
Record 14	Field 1 =	Node Number
	Field 1 =	Element Number
	Field 2 =	Number of data values in this element
Record 15	Field 1 =	Value of data for node number in Record 14*

The post-processing is carried within I-DEAS in the usual manner and the user is referred to the documentation with I-DEAS for the guidelines for post-processing FEM results.

* For complex data, there will be 2*NDV data lines at each node. The order is: real part for value 1, imaginary part for value 1, etc. for all points.

9.7 HYPERMESH

HYPERMESH is a general purpose, 3-D Mechanical Computer Aided Engineering software system that uses interactive graphics to create engineering designs and permit results evaluation. It is quite popular among automotive engineers. While HYPERMESH is primarily used for finite element modeling, it is also quite useful for developing boundary element models for GPBEST analysis. It utilizes an open-ended ‘‘gateway’’ architecture that facilitates access to most design, analysis and manufacturing software programs. HYPEREMSH is developed, supported, and maintained by Altair Computing, Inc. of Detroit, Michigan.

HYPERMESH is in many respects similar to PATRAN-3. Many of the guidelines stated previously regarding PATRAN-3 also apply to HYPERMESH.

9.7.1 PREBEST USING HYPERMESH

The HYPERMESH user must be sure to use the ASCII neutral file option when exporting a model for PREBEST. The default HYPERMESH database is a binary format and cannot be used by PREBEST.

9.7.1.1 SUPPORTED HYPERMESH NEUTRAL FILE PACKETS

Table 9.7.1.1.1 Supported HYPERMESH ASCII Neutral File Packet Types

HYPERMESH ASCII Neutral File Packet	Packet Description
*node	Node
*quad8, *bar3, etc.	Element
*material	Material Properties
*dictionary	Analysis-Specific Properties
*property	Element Properties
*system	Coordinate System
*loadcollector	Load/Boundary Condition Set
*constraint	Boundary Condition
*pressure	Pressure
*component	Component/Collector (GMR)

9.7.1.2 SUPPORTED HYPERMESH ELEMENTS

Tables 9.7.1.2.1 and 9.7.1.2.2 list the elements available in HYPERMESH for GPBEST analysis.

Table 9.7.1.2.1 HYPERMESH Element Library (2-D)

HYPERMESH CODE	GPBEST Element Name
Boundary Elements	
bar / bar2	Linear 2-noded surface element
bar3	Quadratic 3-noded surface element
Volume Cells	
tria3	Linear 3-noded volume cell
quad4	Linear 4-noded volume cell
tria6	Quadratic 6-noded volume cell
quad8	Quadratic 8-noded volume cell

NOTE:

1. The nodal numbering sequence in HYPERMESH is different from GPBEST. Refer to the HYPERMESH Manual for the order used in HYPERMESH.
2. HYPERMESH 2.0 only supports 2-noded bar elements. HYPERMESH 2.0 users should specify "LINEAR FUNCTIONAL VARIATION" when translating 2-D models. HYPERMESH 2.1 and later releases support 2-noded and 3-noded elements.

Table 9.7.1.2.2 HYPERMESH Element Library (3-D)

HYPERMESH CODE	GPBEST Element Name
Boundary Elements	
bar / bar2	2-noded hole element
bar3	3-noded hole element
tria3	Linear 3-noded surface element
quad4	Linear 4-noded surface element
tria6	Quadratic 6-noded surface element
quad8	Quadratic 8-noded surface element
Volume Cells	
tetra4	Linear 4-noded volume cell
penta6	Linear 6-noded volume cell
hexa8	Linear 8-noded volume cell
tetra10	Quadratic 10-noded volume cell
penta15	Quadratic 15-noded volume cell
hexa20	Quadratic 20-noded volume cell

NOTE:

1. The nodal numbering sequence in HYPERMESH is different from GPBEST. Refer to the HYPERMESH Manual for the nodal connectivity used in HYPERMESH. Note that the nodal numbering sequence for HYPERMESH is identical to PATRAN.
2. Users of HYPERMESH must input the radius value for Line (hole) elements in the GPBEST data file.
3. HYPERMESH 2.0 only supports 2-noded bar elements. HYPERMESH 2.1 supports 2-noded and 3-noded bar elements.

Line (Hole) Elements

A Line (hole) element in GPBEST is a two- or three-noded BAR element with a radius property parameter. Line (hole) elements are applicable to 3-D models only. To specify a Line (hole) element, a BAR (beam) element must first be defined and stored in the appropriate GROUP. Users of HYPERMESH must input the hole element radius in the GPBEST data file manually.

9.7.1.3 MODELING GEOMETRY IN HYPERMESH

The HYPEREMSH program is designed for finite element modeling, but at the same time, its features can also be used for efficient boundary element modeling. Generally, the new user finds it challenging to create GMRs within HYPERMESH and to maintain the interface compatibility between GMRs. The following are a few basic hints that may be helpful to the new user while modeling three-dimensional problems.

1. At the geometric level of the model-building process, the user should identify cutting planes or surfaces where it is intended to sub-structure the model into GMRs.

2. Before meshing the entire model, surfaces (patches) should be built on the interfaces. These surfaces (only at the interfaces) should be duplicated by executing a zero translation.

3. The element ‘‘COMPONENTS’’ (also known as ‘‘COLLECTORS’’ in HYPERMESH) correspond to GMRs in GPBEST. These are defined at this stage with one set of interface surfaces. Each COMPONENT is meshed, taking care that the same elements are generated at a common interface on both surfaces of the groups to which that interface belongs.

4. At this stage, node-equivalencing is carried out one COLLECTOR at a time.

   This method of creating the model will have interfaces with duplicate element IDs and node IDs. This is depicted in Figure 9.3.8.3.2.

5. The user may then proceed to define the material properties, assign property IDs, and assign boundary conditions.

6. In HYPERMESH, elements are written to components (GROUPs) based on property (plate thickness). Although GPBEST does not use this information, be aware that different properties (and therefore elements) are written to different components. This is also true if a model is imported into HYPERMESH. For example, if a PATRAN neutral file only contains one named component (i.e., GROUP), but elements within it contain six different element properties. This file will be treated as a six-component (six-GROUP) model if it is imported into HYPERMESH. This does not present a limitation for the user. The user just needs to be aware that this occurs.

7. HYPERMESH 2.0 supports only 2-noded bar elements. HYPERMESH 2.1 supports both 2-noded and 3-noded bar elements.

It must be emphasized that the above steps are not rigid in terms of model-building. They are merely a set of suggested guidelines. The user may pre-process data in any other convenient manner.

The HYPERMESH user should be aware of the following limitations:

1. ‘‘Components’’ in HYPERMESH correspond to GROUPs in other modeling programs. However, Components can only contain elements. Therefore, free sampling points, free nodes used to apply loads, etc. are not supported by the HYPERMESH translator in PREBEST.
2. HYPERMESH does not allow a single element to be referenced in more than one Component. Therefore, users must have unique nodes and elements at all interfaces between GMRs. This allows each component (GROUP) to be independent of all others.
3. Only elements are placed in Components in HYPERMESH. Nodes are implied due to their attachment to elements. PREBEST translates them properly into POINTs within GMRs. However, the user is unable to model free sampling points in HYPERMESH.
4. Only isotropic elastic material properties are supported in HYPERMESH by the current version of PREBEST.
5. Since HYPERMESH only allows one property ID per component (GROUP), this presents a problem if the user wants to use property IDs to partition GMRs into separate surfaces. As discussed in Section 9.3.6.2, in this case the user can use the prefix ‘‘SU’’ to define component (GROUP) names for surfaces. For example, if GMR5 is to be divided into two surfaces, instead of creating a component named ‘‘GMR5’’, the user would create two other components named ‘‘SU14_GMR5’’ and ‘‘SU55_GMR5’’. These latter two components would be translated by PREBEST into two separate surfaces within GMR5, the equivalent of assigning property ID 14 to some elements and property ID 55 to the rest to define the two surfaces.

9.7.1.4 MODELING BOUNDARY CONDITIONS IN HYPERMESH

Modeling boundary conditions in HYPERMESH are very similar to modeling them in PATRAN-3. Refer to Sections 9.3.12 and 9.5.1.4 for more information.

Guidelines for Boundary Condition Application (3-D)

1. Look through Table 9.3.12.1 to identify the Load Set IDs that are applicable to your problem.
2. In HYPERMESH, when you are ready to start applying boundary conditions, select the menu-button '[collectors]', then select '[loadcols].' All boundary conditions and loads are specified in Load Collectors. The name of the Load Collector is the number of the Load Set in Table 9.3.12.1. Immediately after a Load Collector is created, it is made 'current.'
3. In applying boundary conditions to 3-D problems, remember that all loads and boundary condition constraints are specified on elements and not on nodes. The following outlines the general procedure:

   Select [pressures]
   Select the elements to apply load/B.C
   Specify the [magnitude] (if applicable)

4. Repeat steps 1-3 for the other boundary condition sets.

Guidelines for Boundary Condition Application (2-D)

1. Look through Table 9.3.12.1 to identify the Load Set IDs that are applicable for the problem.
2. In HYPERMESH, when you are ready to start applying boundary conditions, select the menu-button '[collectors]', then select '[loadcols].' All boundary conditions and loads are specified in Load Collectors. The name of the Load Collector is the number of the Load Set in Table 9.3.12.1. Immediately after a Load Collector is created, it is made 'current.'
3. In applying boundary conditions to 2-D problems, remember that all loads and boundary condition constraints are specified on nodes and not on elements directly. All the nodes on a given element must be selected for a load/B.C. in order for the element load/B.C. to be created by PREBEST. The following outlines the general procedure:

   Select [constraints]
   Select the nodes to apply load/B.C
   Specify the [X-dof] magnitude (if applicable)

   Note that the 'X-dof' can be zero or non-zero, depending on the particular Load Set ID that is being used from Table 9.3.12.1.

4. Repeat steps 1-3 for the other boundary condition sets.

9.7.2 POSTBEST USING HYPERMESH

Running POSTBEST using the HYPERMESH option is quite similar to using the PATRAN option. Hence, statements made regarding PATRAN with POSTBEST apply here.

There is a certain limitation regarding the renumbering of entities in POSTBEST, which only affects HYPERMESH users. HYPERMESH does not permit an element to exist in two components (GROUPs) at the same time. It can only belong to one or the other. The following situations should be considered:

1. If the GPBEST data file has unique node and element numbers at interfaces, the user can choose *Not* to renumber when prompted by POSTBEST. This will preserve all node and element numbering, and the components (GROUPs) will be correct.
2. If the GPBEST data file has only one row of node and elements at interfaces (i.e., they are shared between the two GMRs), the user *must* choose to renumber when prompted by POSTBEST. When the entities are renumbered, unique node and element numbers will appear at all interfaces.

9.7.2.1 HYPERMESH RESULTS FILES

The file **`HYPER.GEOM`** contains the HYPERMESH model data from a POSTBEST run. It can be imported into HYPERMESH using the **`hmascii`** format.

When POSTBEST processes each result time-step, several files in the form of PATRAN.xxx.n are created for result post-processing. They are binary PATRAN results files. They must be converted to HYPERMESH result-file format using the **`hmpatran`** program which is supplied with HYPERMESH. Since the result files are initially in PATRAN result file format, refer to Section 9.5.2.1 for the various result options supported by the PATRAN result files.

After completing the POSTBEST program, use the following command to convert the PATRAN result files into a corresponding HYPERMESH binary results file (called '**`file1.res`**'):

```
hmpatran PATRAN file1.res
```

Once the HYPERMESH binary results file has been successfully created, the PATRAN result files can be deleted as they are no longer needed and can take up valuable disk space.

9.8 FEMAP

FEMAP is a general purpose, 3-D Mechanical Computer Aided Engineering software system that uses interactive graphics to create engineering designs and enables results evaluation. It is quite popular among engineers on the PC platform. While FEMAP is primarily used for finite element modeling, it is also quite useful for developing boundary element models for GPBEST analysis. It utilizes an open-ended ‘‘gateway’’ architecture that facilitates access to most design, analysis and manufacturing software programs. FEMAP is developed, supported, and maintained by Enterprise Software, Inc. of Exton, Pennsylvania.

FEMAP is in many respects similar to I-DEAS and PATRAN-3. Many of the guidelines stated previously regarding these programs also apply to FEMAP.

9.8.1 PREBEST USING FEMAP

The FEMAP user must be sure to export their model to the ASCII FEMAP neutral file format. The default database used by FEMAP is binary and cannot be used by PREBEST.

9.8.1.1 SUPPORTED FEMAP NEUTRAL FILE BLOCKS

Table 9.8.1.1.1 Supported FEMAP ASCII Neutral File Packet Types

FEMAP ASCII Neutral File Packet	Packet Description
403	Node
404	Element
401 / 601	Material Properties
402	Element Properties
405	Coordinate Sytstems
507	Load/Boundary Condition
408	Group (GMR)
100	Title/Header

9.8.1.2 SUPPORTED FEMAP ELEMENTS

Table 9.8.1.2.1 FEMAP Element Library (2-D)

ELEM TYPE / TOPOLOGY	GPBEST Element Name
Boundary Elements	
2 /	(bar) Linear 2-noded surface element
5 /	(beam) Linear 2-noded surface element
Volume Cells	
17 / 2	(tri3) Linear 3-noded volume cell
17 / 4	(quad4) Linear 4-noded volume cell
18 / 3	(tri6) Quadratic 6-noded volume cell
18 / 5	(quad8) Quadratic 8-noded volume cell

NOTE:

1. The nodal numbering sequence in FEMAP is different from GPBEST. Refer to the FEMAP User's Manual for the connectivity used in FEMAP.
2. FEMAP only supports 2-noded bar elements. FEMAP users should request ''LINEAR FUNCTIONAL VARIATION'' when translating 2-D models.

Table 9.8.1.2.2 FEMAP Element Library (3-D)

ELEM TYPE / TOPOLOGY	GPBEST Element Name
Boundary Elements	
bar	2-noded hole element
17 / 2	(tri3) Linear 3-noded surface element
17 / 4	(quad4) Linear 4-noded surface element
18 / 3	(tri6) Quadratic 6-noded surface element
18 / 5	(tri8) Quadratic 8-noded surface element
Volume Cells	
25 / 6	(tet4) Linear 4-noded volume cell
25 / 7	(wedge6) Linear 6-noded volume cell
25 / 8	(brick8) Linear 8-noded volume cell
26 / 10	(tet10) Quadratic 10-noded volume cell
26 / 11	(wedge15) Quadratic 15-noded volume cell
26 / 12	(brick20) Quadratic 20-noded volume cell

NOTE:

1. The nodal numbering sequence in FEMAP is different from GPBEST. Refer to the FEMAP User's Manual for the order used in FEMAP. Note that the nodal numbering sequence for FEMAP is similar to PATRAN.
2. Users of FEMAP must input the radius value for Line (hole) elements in the GPBEST data file.
3. FEMAP only supports 2-noded bar elements.

Line (Hole) Elements

It is possible to define Line (hole) elements in a 3-D model within FEMAP. A Line (hole) element in GPBEST is a two- or three-noded beam element with a radius property. To specify a hole element, a bar (beam) element must first be defined and stored in the appropriate GROUP. They may be unconnected elements lying within the problem domain. The user must then input the hole element radius by manually editing the GPBEST data file.

Bar Elements in FEMAP

FEMAP only supports 2-noded bar elements. It does not support 3-noded bars. Since it is preferable to use quadratic geometry in GPBEST, this is a severe limitation when modeling the boundary of 2-D problems and Line (hole) elements in 3-D problems.

A work-around is provided in the current release of PREBEST and POSTBEST. The mid-node can be specified as the ‘‘orientation node’’ of the bar element. However, the orientation node cannot be colinear with the bar element. If the bars are simulating a curve, this is no problem since the mid-node will not be colinear.

If the bars are simulating straight lines, the user must create the midnodes *outside* of the X-Y plane, tie them to the bar elements as orientation nodes, and then move the mid-nodes back to the X-Y plane just before modeling is completed.

Whatever situation the user is trying to model, PREBEST will translate these ‘‘orientation nodes’’ as midnodes for the elements. Thus, curved elements in GPBEST are still possible even though FEMAP only supports 2-noded bars. POSTBEST will also generate 2-noded bars with the midnodes simulated by the ‘‘orientation nodes.’’ Chapter 4 of the ‘‘Introduction to GPBEST: Elastic Analysis’’ Manual contains an example of this approach where a 2-D problem is modeled.

This work-around is not flawless, but it does allow the FEMAP user to circumvent this severe limitation that FEMAP has when working with bar elements. Hopefully, FEMAP will support 3-noded bar elements in the future.

9.8.1.3 MODELING GEOMETRY IN FEMAP

FEMAP is a CAE software system that is primarily designed for finite element modeling, but at the same time, its features can also be used for efficient boundary element modeling. The following are a few basic hints that may be helpful to the new user while modeling for GPBEST analysis.

1. At the geometric level of the model-building process, the user should identify cutting planes or surfaces where it is intended to sub-structure the model into GMRs.

2. Before meshing the entire model, surfaces (patches) should be built on the interfaces. These surfaces (only at the interfaces) should be duplicated by executing a zero-translation copy.

3. The GROUPs, which correspond to GMRs in GPBEST, are defined at this stage with one set of interface surfaces. Each GROUP should be meshed, making sure that the same elements are generated at a common interface on both surfaces of the groups to which that interface belongs.

4. At this stage, node-equivalencing is carried out on one GROUP at a time. This method of creating the model will have interfaces with unique element IDs and node IDs.

5. The user may then proceed to define the material properties, assign property IDs, and assign boundary conditions. The PREBEST translator does not require material properties to be assigned to elements. However, the FEMAP program requires a property and material to be defined when creating elements. Therefore, the FEMAP user should use a dummy property. All the different types of materials to be used must be defined as multiple sets. During the interactive data preparation via PREBEST, the user will be asked to assign a material set to each GMR only if multiple material definitions exist. Material properties in a GPBEST analysis need to be homogeneous over an entire GMR.

6. FEMAP only supports 2-noded bar elements.

It must be emphasized that the above steps are not rigid in terms of model-building. They are merely a set of suggested guidelines. The user may pre-process data in any other convenient manner.

9.8.1.4 MODELING BOUNDARY CONDITIONS IN FEMAP

Guidelines for Boundary Condition Application (3-D)

1. Look through Table 9.3.12.1 to identify the Load Set IDs that are applicable to your problem.
2. In FEMAP, when you are ready to begin applying boundary conditions, use the LOADs option. All boundary conditions and loads are specified through LOADs. The ID label of the Load Set is the number in Table 9.3.12.1. Immediately after a Load Set is created, it is made 'current.'
3. In applying boundary conditions to 3-D problems, remember that all loads and boundary condition constraints are specified on elements and not on nodes.

   Define a Load Set with the appropriate number using Model / Load / Set
   Apply the ''pressure'' load using Model / Load / Elemental
   Specify the ''pressure'' magnitude (if applicable)
   Specify Face 1 (always)

4. Repeat steps 1-3 for the other boundary condition sets.

Guidelines for Boundary Condition Application (2-D)

1. Look through Table 9.3.12.1 to identify the Load Set IDs that are applicable for the problem.
2. In FEMAP, when you are ready to start applying boundary conditions, use the LOADs option. All boundary conditions and loads are specified through LOADs. The ID label of the Load Set is the number in Table 9.3.12.1. Immediately after a Load Set is created, it is made 'current.'
3. In applying boundary conditions to 2-D problems, remember that all loads and boundary condition constraints are specified on elements (as distributed loads) and not on nodes.

   Note that the 'X-dof' can be zero or non-zero, depending on the particular Load Set ID that is being used from Table 9.3.12.1.

   Define a Load Set with the appropriate number using Model / Load / Set
   Apply the ''Distributed Load'' using Model / Load / Elemental
   Specify the same magnitude at both ends of the ''beam''
   Specify Global-X (always)

4. Repeat steps 1-3 for the other boundary condition sets.

9.8.2 POSTBEST USING FEMAP

9.8.2.1 FEMAP RESULTS

The results available for FEMAP are similar to those described for PATRAN-3 and I-DEAS. FEMAP results are placed in the FEMAP neutral file along with the model entities; separate results files are not used. Refer to Section 9.4.5 for a description of the results that are available.

10.0 GPBEST NEUTRAL FILE FORMAT

The GPBEST neutral file is designed as a general interface for post-processing of GPBEST results. Included in the neutral file are the material and geometrical properties of the model, the interface and boundary conditions, all body force definitions and the results at each time step.

The name of the neutral file is NEUTRAL.OUT. It is a formatted, direct-access file, and each record is 80 characters in length. The number of records is based on the size and type of analysis.

On the following page, a description of the contents of the GPBEST neutral file is given. This is followed by an outline of the order in which the sections appear in the neutral file, along with indexing information for retrieving the appropriate records.

SECTION **PAGE**

10.0 - GPBEST Neutral File Format 10.1
10.0.1 - Outline of Neutral File 10.4
10.1 - Problem (Case Input) Description 10.6
10.1.1 - Main Header 10.6
10.2 - Material Description 10.12
10.2.1 - Material Header 10.13
10.2.2 - Temperature Input Values for Temperature-Dependent Material 10.16
10.2.3 - Elastic Modulus Input Values for Temperature-Dependent Material . . . 10.17
10.2.4 - Thermal Coefficient Input Values for Temperature-Dependent Material . 10.18
10.2.5 - Compliance Matrix 10.19
10.2.6 - Stiffness Matrix 10.20
10.2.7 - Thermal Coefficient of Expansion Tensor 10.21
10.2.8 - Conductivity Tensor 10.22
10.2.9 - Orientation Angle/Vector 10.23
10.3 - GMR Description 10.24
10.3.1 - GMR Header 10.24
10.3.2 - Nodal Coordinates 10.27
10.3.3 - Boundary Element Connectivity 10.29
10.3.4 - Hole Element Connectivity 10.33
10.3.5 - Sampling Surface Element Connectivity 10.35
10.4 - Interface Description 10.36
10.4.1 - Interface Header 10.36
10.4.2 - First Geometry Set Definition 10.37
10.4.3 - Element List - 1 . . . . . 10.38
10.4.4 - Source Point List - 1 . . . . . 10.39
10.4.5 - Second Geometry Set Definition 10.40
10.4.6 - Element List - 2 . . . . . 10.41

SECTION **PAGE**

10.4.7 - Source Point List - 2 . . . . . 10.42
10.4.8 - Fit, Offset and Contact Interface Record 10.43
10.4.9 - Thermal and Generalized Convection Record 10.44
10.4.10 - Spring Interface Record 10.45
10.4.11 - Interface Symmetry Record 10.46
10.5 - Boundary Condition Description 10.47
10.5.1 - Boundary Condition Header 10.47
10.5.2 - Geometry Definition 10.50
10.5.3 - Element List 10.51
10.5.4 - Source Point List 10.52
10.5.5 - Spring or Convection Condition 10.53
10.5.6 - List of Time Values 10.54
10.5.7 - Type of Degree of Freedom 10.55
10.5.8 - Value of Degree of Freedom 10.56
10.6 - Body Force Description 10.57
10.6.1 - Body Force Header 10.57
10.6.2 - Thermal Body Force Header 10.58
10.6.2.1 - List of Time Values 10.59
10.6.2.2 - Continuous Thermal Variation Values of Polynomial Terms . . . 10.61
10.6.2.3 - Nodal or Least Square Variation Nodal Temperature Values . . 10.64
10.6.3 - Centrifugal Body Force Header 10.67
10.6.3.1 - Reference Point and Direction Record 10.68
10.6.3.2 - List of Time Values 10.69
10.6.3.3 - Speeds of Rotation 10.71
10.6.4 - Inertial Body Force Header 10.73
10.6.4.1 - Direction Record 10.74
10.6.4.2 - List of Time Values 10.75
10.6.4.3 - Acceleration Values 10.77
10.6.5 - Generalized Plane Stress/Strain Body Force Header 10.79
10.6.5.1 - List of Time Values 10.80
10.6.5.2 - Values of Polynomial Terms 10.82
10.7 - Result Description 10.85
10.7.1 - Result Header 10.85
10.7.2 - Boundary Element Scalar Results (temperature, flux, normal displacement) 10.88
10.7.3 - Boundary Element Vector Results (displacement and tractions) 10.90
10.7.4 - Boundary Element Normal Vector 10.91
10.7.5 - Hole Element Scalar Results (temperature, flux) 10.92
10.7.6 - Boundary Element Load Calculation (heat and/or load balance) 10.93
10.7.7 - Hole Element Load Calculation (heat and/or load balance) 10.94
10.7.8 - Nodal-Based Scalar Results (temperature) 10.95
10.7.9 - Nodal-Based Vector Results (displacements) 10.97

SECTION **PAGE**

10.7.10 - Nodal-Based Stress Results (stresses) 10.98
10.7.11 - Nodal-Based Strain Results (strains) 10.100
10.7.12 - Nodal-Based Plastic Strain Results (plastic strains) 10.102

10.0.1 OUTLINE OF NEUTRAL FILE

(RECORD ORDER AND INDEXING INFORMATION)

Section	Record Number of this record appears on
MAIN HEADER (always record 1)	- - -
MATERIAL HEADER (GMR 1)	main header
Material data for GMR 1	material 1 header
(Material header and data are recorded once for each GMR)	
MATERIAL HEADER (GMR N)	material N-1 header
Material data for GMR N	material N header
GMR HEADER (GMR 1)	main header
GMR data for GMR 1	GMR 1 header
(GMR header and data is recorded for each GMR)	
GMR Header (GMR N)	GMR N-1 header
GMR data for GMR N	GMR N header
INTERFACE HEADER (INTERFACE SET 1)	main header
Interface data for INTERFACE SET 1	INTERFACE SET 1 header
(Interface header and data is recorded for each Interface set)	
INTERFACE HEADER (INTERFACE SET N)	INTERFACE SET N-1 header
Interface data for INTERFACE SET N	INTERFACE SET N header
BOUNDARY CONDITION HEADER (BCSET 1)	main header
Boundary Condition data for BCSET 1	BCSET 1 header
(Boundary Condition header and data are recorded for each Boundary Condition set)	
BOUNDARY CONDITION HEADER (BCSET N)	BCSET N-1 header
Boundary Condition data for BCSET N	BCSET N header
BODY FORCE HEADER (BODY FORCE SET 1)	main header
Boundary Condition data for BODY FORCE SET 1	BODY FORCE SET 1 header

(Boundary Condition header and data are recorded for each Boundary Condition set)

BODY FORCE HEADER (BODY FORCE SET N)	BODY FORCE SET N-1 header
Boundary Condition data for BODY FORCE SET N	BODY FORCE SET N header
RESULT HEADER (time 1)	main header
Results for Time 1	result header for time 1

(Result header and results are recorded for each time step)

RESULT HEADER (time N)	result header for time N-1
Results for Time N	result header for time N

NOTE: Indexing information for the data within a section is found on the header card of the corresponding section.

10.1 PROBLEM (CASE INPUT) DESCRIPTION

10.1.1 MAIN HEADER

The main header is always the first two records of the neutral file. It describes the basic information about the problem of indexing information. The main header has the following format:

		Column Fields
1)	Problem type:	(1 - 4)
	= ACOU if Steady-state Acoustic Analysis (complex domain)	
	= CONS if Consolidation (Poroelastic) analysis	
	= CTHE if Concurrent Thermal analysis	
	= DIFF if Diffusion analysis	
	= DIST if Thermal distortion analysis	
	= ELAS if Elastic analysis	
	= FLUI if Fluid Dynamic analysis	
	= FORC if Forced Vibration analysis (Complex domain)	
	= FREE if Free Vibration analysis	
	= HEAT if Heat Transfer analysis	
	= NCON if Nonlinear Consolidation analysis	
	= NCTH if Nonlinear Concurrent Thermal analysis	
	= PLAS if Plasticity analysis	
	= RACO if Transient or Eigenfrequency Acoustic analysis (Real domain)	
	= TRAN if Transient elastodynamic analysis problem	
2)	Dimensionality of the problem:	(6 - 7)
	= AX if Problem is axisymmetry	
	= A+ if Problem is axisymmetry with internal cells or (contour) discretization	
	= 2D if Problem is a 2-D	
	= 2+ if Problem is 2D with internal cells or (contour) discretization	
	= 3D if Problem is a 3-D	
	= GA if Problem is a generalized axisymmetry	
3)	Symmetry of Problem :	(8 - 9)
	= blank if Problem does not specify symmetry	
	= HF if Problem has symmetry about the Y-Z plane ($R-\theta$ symmetry in axisymmetry)	
	= QU if Problem has symmetry about the X-Z & Y-Z planes	
	= OC if Problem has symmetry about the X-Z, Y-Z & X-Y planes	
4)	Restart condition:	(11 - 14)
	= WRIT Write (save) all intergration files generated	
	= READ Read bypasses intergration phase for run	
	= HOLE Hole-related coefficients are recomputed & stored	
	= VELO Restart a fluid dynamics problem	

= SOLV Use the decomposed system matrix from previous run

5)	Problem precision:	(16 - 19)
	= HIGH Uses a 4 x 4 integration on each sub-element	
	= MEDI Uses a 3 x 3 integration on each sub-element	
	= LOW Uses a 2 x 2 integration on each sub-element	
6)	Total number of user-defined boundary conditions and interface condition sets	(20 - 24)
7)	Record number of the header of the first interface or boundary condition set	(25 - 30)
8)	Total number of user-defined body force sets	(31 - 35)
9)	Record number of the header of the first body force set	(36 - 40)
10)	Total number of user-defined material sets	(42 - 43)
11)	Total number of GMRs (geometric modeling regions)	(45 - 46)
12)	Total number of output times or frequencies as requested by the user (also see Main header, card 3)	(48 - 50)
13)	Total number of records in this neutral file, based on the number of output times in item #12 (also see Main header, card 3)	(52 - 57)
14)	Record number of the header of the first material (=0 if no material data is present)	(59 - 64)
15)	Geometric data flag (=0 header info only ; =1 complete geometric data)	(66 - 66)
16)	Record number of the header of the first GMR	(68 - 72)
17)	Record number of the header of the results of the first time or frequency step (=0 if no results are present)	(74 - 79)
18)	Continuation flag	(80 - 80)

<u>GPBEST neutral file main header data format (CARD 1)</u>

```
  1  2 3    4    5    6    7     8   9   10 11  12    13    14  15  16     17 18
ANAL DIM/S RES PREC  NO.  ST.   NO. ST. NO. NO. NO.  TOTAL MAT 1   GMR 1  RES.1
                    BC/IN NO.  BDF. NO. MAT GMR TME  NOR  HEADER  HEADER HEADER
----+----1----+----2----+----3----+----4----+----5----+----6----+----7----+----8
CCCC CCCC CCCC CCCC xxxx xxxxx xxxx xxxx xx xx xxx xxxxxx xxxxxx x xxxxx xxxxxx*
----+----1----+----2----+----3----+----4----+----5----+----6----+----7----+----8
```

where:

C - any valid character (A - Z or a - z or 0 - 9 or SPACE)

x - any valid number (0 - 9)

* - indicates that the main header is continued on the next record.

GPBEST neutral file main header data format (CARD 2)

The second main header card has the following format:

		Column Fields
1)	Title	(1 - 72)
2)	Continuation flag	(80 - 80)

```
                                    1                                   2
                                  TITLE
----+----1----+----2----+----3----+----4----+----5----+----6----+----7----+----8
cccccccccccccccccccccccccccccccccccccccccccccccccccccccccccccccccccccccccccc       *
----+----1----+----2----+----3----+----4----+----5----+----6----+----7----+----8
```

where:

C - any valid character (A - Z or a - z or 0 - 9 or SPACE)

* - indicates that the main header is continued on the next record.

Note: In periodic analyses, the time is replaced by frequency.

GPBEST neutral file main header data format (CARD 3)

The third main header card has the following format:

		Column Fields
1)	Actual number of successful output times (or frequencies) contained in this neutral file. May be different from item 12 on main header card #2	(1 - 6)
2)	Actual number of records in this neutral file (may be different from item 13 on main header card #2	(8 - 16)
3)	Number of fatal errors from current analysis (= -1 for an aborted run that did not exit gracefully)	(18 - 22)
4)	Number of warnings that occurred (= -1 for an aborted run that did not exit gracefully)	(24 - 28)
5)	Number of informational messages from current analysis (= -1 for an aborted run that did not exit gracefully)	(30 - 34)
6)	Continuation Flag	(80)

```
         GPBEST Neutral File Main Header Data Format (CARD 3)
   1       2       3     4     5                                                6
ACTUAL ACTUAL #  FATAL WARN. INFO.                                              C
TIMES  RECORDS   ERROR MESG. MESG.
----+----1----+----2----+----3----+----4----+----5----+----6----+----7----+----8
xxxxxx xxxxxxxxx xxxxx xxxxx xxxxx                                              *
----+----1----+----2----+----3----+----4----+----5----+----6----+----7----+----8
```

where:

x - any valid number (0 - 9) * - continuation character

GPBEST neutral file main header data format (CARD 4)

The fourth main header card has the following format:

		Column Fields
1)	Acoustic Reference Pressure (zero for non-acoustic analysis)	(2 - 3)
2)	Acoustic Reference Intensity (zero for non-acoustic analysis)	(15 - 26)
3)	Acoustic Reference Power (zero for non-acoustic analysis)	(28 - 39)
4)	Acoustic Reference Energy (zero for non-acoustic analysis)	(41 - 52)
5)	Flag indicating the units for output of frequency values where 1=Hertz and 2=Radians per second	(79)

```
          GPBEST Neutral File Main Header Data Format (CARD 4)
    1             2            3            4                                5
REFERENCE     REFERENCE    REFERENCE    REFERENCE                           FREQ
PRESSURE      INTENSITY    POWER        ENERGY                              UNIT
----+----1----+----2----+----3----+----4----+----5----+----6----+----7----+----8
s.xxxxxxEsxx s.xxxxxxEsxx s.xxxxxxEsxx s.xxxxxxEsxx                          x
----+----1----+----2----+----3----+----4----+----5----+----6----+----7----+----8
```

where:

x - any valid number (0 - 9)

s - is the sign of the mantissa and the exponent.

. - is the decimal point and is required.

E - is an exponent sign and is required.

10.2 MATERIAL DESCRIPTION

A material description is defined once for every GMR in the analysis regardless of the number of user-defined material sets in the GPBEST input data file of the problem. The reason for this is that certain material properties may be temperature-dependent (and/or a function of velocity in fluids analysis). Even if the same material set is used for two or more GMRs, the material properties assumed in the analysis may be different for each GMR since the temperature (and/or velocity) assumed in the integration (see TINT and VINT cards in **GMR input) may be different for each GMR.

10.2.1 MATERIAL HEADER

The material header consists of two subsequent records. Each material will have a material header that contains material data and indexing information.

MATERIAL HEADER (CARD 1)

The first material header card has the following format:

		Column Fields
1)	GMR ID	(1-7)
2)	Material ID	(10 - 17)
3)	Number of temperature values at which temperature-dependent material properties are defined (= 0 for temperature-independent)	(19-20)
4)	Starting record for temperature values at which temperature-dependent properties are defined	(22 - 27)
5)	Number of temperature-dependent moduli of elasticity	(29-30)
6)	Starting record for temperature-dependent elastic modulus	(32 - 37)
7)	Number of temperature-dependent thermal coefficient	(39 - 40)
8)	Starting record for temperature-dependent thermal coefficient of expansion	(42 - 47)
9)	Starting record of compliance matrix (= 0 if not applicable to analysis)	(53-58)
10)	Starting record of stiffness matrix (= 0 if not applicable to analysis)	(60-65)
11)	Record number of thermal coefficient of expansion tensor (= 0 if not applicable to analysis)	(67-72)
12)	Record number of header for next material	(76 - 79)
13)	Continuation flag:	(80)

```
   1        2     3    4    5    6    7     8         9     10     11     12  13
  GMR    MATERIAL No. 1st.  No. 1st.  No.  1st.     COMP. STIFF.  ALPHA  NEXT
   ID       ID   TEMP TEMP EMOD EMOD ALPH ALPHA    MATRIX MATRIX TENSOR HEADER C
----+----1----+----2----+----3----+----4----+----5----+----6----+----7----+----8
CCCCCCCC CCCCCCCC xx xxxxxx xx xxxxxx xx xxxxxx     xxxxxx xxxxxx xxxxxx xxxxxx*
----+----1----+----2----+----3----+----4----+----5----+----6----+----7----+----8
```

where:

C - any valid character (A-Z or a-z or 0-9 or space)

x - any valid number (0-9)

* - indicates the material header is continued on the next record

MATERIAL HEADER (CARD 2)

The second material header card has the following format:

		Column Fields
1)	Integration temperature (see TINT card in **GMR)	(2 - 13)
2)	Modulus of elasticity assumed for integration	(15 - 26)
3)	Thermal coefficient of expansion assumed for integration	(28 - 39)
4)	Poisson's ratio	(41 - 52)
5)	Density #	(54 - 65)
6)	Speed of sound #	(67 - 78)
7)	Continuation Flag	(80)

```
      1            2            3            4            5            6
 INTEGRATION  INTEGRATION  INTEGRATION   POISSON'S     DENSITY      SPEED OF   7
 TEMPERATURE     EMOD         ALPHA        RATIO                    SOUND     C
----+----1----+----2----+----3----+----4----+----5----+----6----+----7----+----8
  s.xxxxxEsxx  s.xxxxxEsxx  s.xxxxxEsxx  s.xxxxxEsxx  s.xxxxxEsxx  s.xxxxxEsxx *
----+----1----+----2----+----3----+----4----+----5----+----6----+----7----+----8
```

where:

x - any valid number (0-9)

s - is the sign of the mantissa and exponent

. - is the decimal point and is required

E - is an exponent sign and is required

* - indicates the material header is continued on the next record

#only for periodic acoustic and forced vibration analyses.

MATERIAL HEADER (CARD 3)

The third material header card has the following format:

		Column Fields
1)	Starting record of the general conductivity tensor (= 0 if not applicable to analysis)	(2 - 7)
2)	Starting record of the anisotropic material orientation (=0 if not applicable to analysis)	(9 - 14)
3)	Conductivity assumed for integration	(28 - 39)
4)	Specific heat	(41 - 52)

```
    1     2                       3             4
CONDUCT  ORIE.
TENSOR   VECTORS             CONDUCTIVITY   SPEC.HEAT
----+----1----+----2----+----3----+----4----+----5----+
 xxxxxx xxxxxx              s.xxxxxEsxx  s.xxxxxEsxx
----+----1----+----2----+----3----+----4----+----5----+
```

where:

x - any valid number (0-9)
s - is the sign of the mantissa and exponent
. - is the decimal point and is required
E - is an exponent sign and is required
* - either * or blank

10.2.2 TEMPERATURE INPUT VALUES FOR TEMPERATURE-DEPENDENT MATERIAL

The temperature values at which temperature-dependent material properties are defined are stored in the following format:

		Column Fields
1)	Temperature value one	(2 - 13)
2)	Temperature value two	(15 - 26)
3)	Temperature value three	(28 - 39)
4)	Temperature value four	(41 - 52)
5)	Temperature value five	(54 - 65)
6)	Temperature value six	(67 - 78)
7)	Continuation flag	(80)

```
      1            2            3            4            5            6       7
 TEMPERATURE1 TEMPERATURE2 TEMPERATURE3 TEMPERATURE4 TEMPERATURE5 TEMPERATURE8 C
----+----1----+----2----+----3----+----4----+----5----+----6----+----7----+----8
  s.xxxxxEsxx  s.xxxxxEsxx  s.xxxxxEsxx  s.xxxxxEsxx  s.xxxxxEsxx  s.xxxxxEsxx *
----+----1----+----2----+----3----+----4----+----5----+----6----+----7----+----8
```

where:

x - any valid number (0-9)
s - is the sign of the mantissa and exponent
. - is the decimal point and is required
E - is an exponent sign and is required
* - either * or blank

For more than six values, the continuation flag '*' is used and data is continued on the next record. Repeat with as many records as necessary until all values are accounted for.

10.2.3 ELASTIC MODULUS INPUT VALUES FOR TEMPERATURE-DEPENDENT MATERIAL

The elastic modulus values for which temperature values are defined and are stored in the following format:

		Column Fields
1)	Elastic modulus for temperature value one	(2 - 13)
2)	Elastic modulus for temperature value two	(15 - 26)
3)	Elastic modulus for temperature value three	(28 - 39)
4)	Elastic modulus for temperature value four	(41 - 52)
5)	Elastic modulus for temperature value five	(54 - 65)
6)	Elastic modulus for temperature value six	(67 - 78)
7)	Continuation flag:	(80)

```
     1            2            3            4            5            6       7
  E-MODULUS1   E-MODULUS2   E-MODULUS3   E-MODULUS4   E-MODULUS5   E-MODULUS6
----+----1----+----2----+----3----+----4----+----5----+----6----+----7----+----8
  s.xxxxxEsxx  s.xxxxxEsxx  s.xxxxxEsxx  s.xxxxxEsxx  s.xxxxxEsxx  s.xxxxxEsxx
----+----1----+----2----+----3----+----4----+----5----+----6----+----7----+----8
```

where:

x - any valid number (0-9)
s - is the sign of the mantissa and exponent
. - is the decimal point and is required
E - is an exponent sign and is required
* - either * or blank

For more than six values, the continuation flag '*' is used and the data is continued on the next record. Repeat with as many records as necessary until all values are accounted for.

10.2.4 THERMAL COEFFICIENT INPUT VALUES FOR TEMPERATURE-DEPENDENT MATERIAL

The values of the thermal coefficient of expansion corresponding to the temperature input values of a temperature-dependent material are defined and are stored in the following format:

		Column Fields
1)	Elastic modulus for temperature value one	(2 - 13)
2)	Elastic modulus for temperature value two	(15 - 26)
3)	Elastic modulus for temperature value three	(28 - 39)
4)	Elastic modulus for temperature value four	(41 - 52)
5)	Elastic modulus for temperature value five	(54 - 65)
6)	Elastic modulus for temperature value six	(67 - 78)
7)	Continuation flag:	(80)

```
      1            2            3            4            5            6       7
    ALPHA1       ALPHA2       ALPHA3       ALPHA4       ALPHA5       ALPHA6
----+----1----+----2----+----3----+----4----+----5----+----6----+----7----+----8
  s.xxxxxEsxx  s.xxxxxEsxx  s.xxxxxEsxx  s.xxxxxEsxx  s.xxxxxEsxx  s.xxxxxEsxx
----+----1----+----2----+----3----+----4----+----5----+----6----+----7----+----8
```

where:

x - any valid number (0-9)
s - is the sign of the mantissa and exponent
. - is the decimal point and is required
E - is an exponent sign and is required
* - either * or blank

For more than six values, the continuation flag '*' is used and the data is continued on the next record. Repeat with as many records as necessary until all values are accounted for.

10.2.5 COMPLIANCE MATRIX

The compliance matrix corresponding to the modulus of elasticity used during integration relates the stress and strain (defined in global coordinates) in the following manner:

$$\begin{pmatrix} \epsilon_{xx} \\ \epsilon_{yy} \\ \epsilon_{zz} \\ \epsilon_{xy} \\ \epsilon_{xz} \\ \epsilon_{yz} \end{pmatrix} = \begin{pmatrix} C_{11} & C_{12} & C_{13} & C_{14} & C_{15} & C_{16} \\ C_{21} & C_{22} & C_{23} & C_{24} & C_{25} & C_{26} \\ C_{31} & C_{32} & C_{33} & C_{34} & C_{35} & C_{36} \\ C_{41} & C_{42} & C_{43} & C_{44} & C_{45} & C_{46} \\ C_{51} & C_{52} & C_{53} & C_{54} & C_{55} & C_{56} \\ C_{61} & C_{62} & C_{63} & C_{64} & C_{65} & C_{66} \end{pmatrix} \begin{pmatrix} \sigma_{xx} \\ \sigma_{yy} \\ \sigma_{zz} \\ \sigma_{xy} \\ \sigma_{xz} \\ \sigma_{yz} \end{pmatrix}$$

where the σ_{ij} are stresses, and ε_{ij} are tensor strains.

Each row of the compliance matrix is stored on a record for a total of six records in 3D and four records in 2D. Furthermore, in 2D, the fifth and sixth values of each of the four records corresponding to the fifth and sixth columns of the compliance matrix are given as zero values.

The format of the records are:

		Column Fields
1)	Value corresponding to column one	(2 - 13)
2)	Value corresponding to column two	(15 - 26)
3)	Value corresponding to column three	(28 - 39)
4)	Value corresponding to column four	(41 - 52)
5)	Value corresponding to column five	(54 - 65)
6)	Value corresponding to column six	(67 - 78)
7)	Continuation flag:	(80)

```
      1            2            3            4            5            6       7
    COLUMN 1     COLUMN 2     COLUMN 3     COLUMN 4     COLUMN 5     COLUMN 6
----+----1----+----2----+----3----+----4----+----5----+----6----+----7----+----8
  s.xxxxxEsxx  s.xxxxxEsxx  s.xxxxxEsxx  s.xxxxxEsxx  s.xxxxxEsxx  s.xxxxxEsxx *
----+----1----+----2----+----3----+----4----+----5----+----6----+----7----+----8
```

where:

- x - any valid number (0-9)
- s - is the sign of the mantissa and exponent
- . - is the decimal point and is required
- E - is an exponent sign and is required
- * - either * or blank

The continuation flag '$*$' is used to indicate that the data is continued on the next card.

10.2.6 STIFFNESS MATRIX

The stiffness matrix corresponding to the modulus of elasticity used during integration relates the stress and strain (defined in global coordinates) in the following manner:

$$\begin{pmatrix} \sigma_{xx} \\ \sigma_{yy} \\ \sigma_{zz} \\ \sigma_{xy} \\ \sigma_{xz} \\ \sigma_{yz} \end{pmatrix} = \begin{pmatrix} S_{11} & S_{12} & S_{13} & S_{14} & S_{15} & S_{16} \\ S_{21} & S_{22} & S_{23} & S_{24} & S_{25} & S_{26} \\ S_{31} & S_{32} & S_{33} & S_{34} & S_{35} & S_{36} \\ S_{41} & S_{42} & S_{43} & S_{44} & S_{45} & S_{46} \\ S_{51} & S_{52} & S_{53} & S_{54} & S_{55} & S_{56} \\ S_{61} & S_{62} & S_{63} & S_{64} & S_{65} & S_{66} \end{pmatrix} \begin{pmatrix} \epsilon_{xx} \\ \epsilon_{yy} \\ \epsilon_{zz} \\ \epsilon_{xy} \\ \epsilon_{xz} \\ \epsilon_{yz} \end{pmatrix}$$

where the σ_{ij} are stresses, and ε_{ij} are tensor strains.

Each row of the stiffness matrix is stored on a record for a total of six records in 3D and four records in 2D. Furthermore, in 2D, the fifth and sixth values of each of the four records corresponding to the fifth and sixth columns of the stiffness matrix are given as zero values.

The format of the records are:

		Column Fields
1)	Value corresponding to column one	(2 - 13)
2)	Value corresponding to column two	(15 - 26)
3)	Value corresponding to column three	(28 - 39)
4)	Value corresponding to column four	(41 - 52)
5)	Value corresponding to column five	(54 - 65)
6)	Value corresponding to column six	(67 - 78)
7)	Continuation flag:	(80)

```
      1            2            3            4            5            6       7
    COLUMN 1     COLUMN 2     COLUMN 3     COLUMN 4     COLUMN 5     COLUMN 6
----+----1----+----2----+----3----+----4----+----5----+----6----+----7----+----8
  s.xxxxxEsxx  s.xxxxxEsxx  s.xxxxxEsxx  s.xxxxxEsxx  s.xxxxxEsxx  s.xxxxxEsxx *
----+----1----+----2----+----3----+----4----+----5----+----6----+----7----+----8
```

where:

x - any valid number (0-9)
s - is the sign of the mantissa and exponent
. - is the decimal point and is required
E - is an exponent sign and is required
* - either * or blank

The continuation flag '$*$' is used to indicate that the data is continued on the next card.

10.2.7 THERMAL COEFFICIENT OF EXPANSION TENSOR

The thermal coefficient of expansion tensor given in global coordinates relates temperature to thermal strains.

$$\begin{pmatrix} \epsilon_{xx} \\ \epsilon_{yy} \\ \epsilon_{zz} \\ \epsilon_{xy} \\ \epsilon_{xz} \\ \epsilon_{yz} \end{pmatrix} = \begin{pmatrix} \alpha_{11} \\ \alpha_{22} \\ \alpha_{33} \\ \alpha_{12} \\ \alpha_{13} \\ \alpha_{23} \end{pmatrix} * \text{Temperature}$$

in which thermal strains are defined as tensor strains. For isotropic material, $\alpha_{11} = \alpha_{22} = \alpha_{33}$ and $\alpha_{12} = \alpha_{13} = \alpha_{23} = 0$.

The following format is used:

		Column Fields
1)	Value of α_{11}	(2 - 13)
2)	Value of α_{22}	(15 - 26)
3)	Value of α_{33}	(28 - 39)
4)	Value of α_{12}	(41 - 52)
5)	Value of α_{13}	(54 - 65)
6)	Value of α_{23}	(67 - 78)

```
     1            2            3            4            5            6
   ALPHA-11     ALPHA-22     ALPHA-33     ALPHA-12     ALPHA-13     ALPHA-23
----+----1----+----2----+----3----+----4----+----5----+----6----+----7----+----8
  s.xxxxxEsxx  s.xxxxxEsxx  s.xxxxxEsxx  s.xxxxxEsxx  s.xxxxxEsxx  s.xxxxxEsxx
----+----1----+----2----+----3----+----4----+----5----+----6----+----7----+----8
```

where:

x - any valid number (0-9)
s - is the sign of the mantissa and exponent
. - is the decimal point and is required
E - is an exponent sign and is required
* - either * or blank

10.2.8 CONDUCTIVITY TENSOR

The conductivity matrix used during integration of an anisotropic body relates the temperature gradient to the flux vector as follows (define in global coordinates):

$$\begin{pmatrix} f_x \\ f_y \\ f_z \end{pmatrix} = \begin{pmatrix} k_{11} & k_{12} & k_{13} \\ k_{21} & k_{22} & k_{23} \\ k_{31} & k_{32} & k_{33} \end{pmatrix} \begin{pmatrix} \theta_{,x} \\ \theta_{,y} \\ \theta_z \end{pmatrix}$$

Due to symmetry, there are only six independent terms in the conductivity tensor which are stored on a single record as follows:

		Column Fields
1)	Value of k_{11}	(2 - 13)
2)	Value of k_{22}	(15 - 26)
3)	Value of k_{33}	(28 - 39)
4)	Value of $k_{12}(= k_{21})$	(41 - 52)
5)	Value of $k_{13}(= k_{31})$	(54 - 65)
6)	Value of $k_{23}(= k_{32})$	(67 - 78)

```
      1            2            3            4            5            6
     k-11         k-22         k-33         k-12         k-13         k-23
----+----1----+----2----+----3----+----4----+----5----+----6----+----7----+----8
  s.xxxxxEsxx  s.xxxxxEsxx  s.xxxxxEsxx  s.xxxxxEsxx  s.xxxxxEsxx  s.xxxxxEsxx
----+----1----+----2----+----3----+----4----+----5----+----6----+----7----+----8
```

where:

x - any valid number (0-9)
s - is the sign of the mantissa and exponent
. - is the decimal point and is required
E - is an exponent sign and is required
* - either * or blank

10.2.9 ORIENTATION ANGLE/VECTOR

The orientation angle in 2D analysis or the direction vector of the first and second direction defining the orientation of the anisotropic material in 3D analysis. The third direction vector is found by the cross product of the vector defining direction 1 into the vector defining direction 2.

The format is as follows:

		Column Fields
1)	Vector 1, Component 1 (or the angle in 2D analysis)	(2 - 13)
2)	Vector 1, Component 2 (or zero in 2D analysis)	(15 - 26)
3)	Vector 1, Component 3 (or zero in 2D analysis)	(28 - 39)
4)	Vector 2, Component 1 (or zero in 2D analysis)	(41 - 52)
5)	Vector 2, Component 2 (or zero in 2D analysis)	(54 - 65)
6)	Vector 2, Component 3 (or zero in 2D analysis)	(67 - 78)

```
     1            2            3            4            5            6
   (VEC1)-1     (VEC1)-2     (VEC1)-3     (VEC2)-1     (VEC2)-2     (VEC2)-3
----+----1----+----2----+----3----+----4----+----5----+----6----+----7----+----8
  s.xxxxxEsxx  s.xxxxxEsxx  s.xxxxxEsxx  s.xxxxxEsxx  s.xxxxxEsxx  s.xxxxxEsxx
----+----1----+----2----+----3----+----4----+----5----+----6----+----7----+----8
```

where:

x - any valid number (0-9)
s - is the sign of the mantissa and exponent
. - is the decimal point and is required
E - is an exponent sign and is required
* - either * or blank

10.3 GMR DESCRIPTION

10.3.1 GMR HEADER

The GMR header consists of three subsequent records. Each GMR will have a header that contains GMR data and indexing information.

GMR HEADER (CARD 1)

The first GMR header card has the following format:

		Column Fields
1)	GMR's ID:	(1 - 8)
2)	Material ID for region:	(10 - 17)
3)	Total number of surfaces in this GMR:	(22 - 25)
4)	Total number of points in this GMR:	(27 - 30)
5)	Total number of boundary elements in this GMR:	(32 - 35)
6)	Total number of boundary source points in this GMR:	(37 - 40)
7)	Total number of hole elements in this GMR:	(42 - 45)
8)	Total number of hole source points in this GMR:	(47 - 50)
9)	Total number of volume cells in this GMR:	(52 - 55)
10)	Total number of volume source points in GMR:	(57 - 60)
11)	Total number of sampling points in this GMR:	(62 - 65)
12)	Total number of sampling surfaces in this GMR:	(67 - 69)
13)	Record number of header for next GMR: (=0 for last GMR)	(74 - 79)
14)	Continuation flag:	(80)

```
    1        2         3    4    5    6    7    8    9   10  11   12       13 14
   GMR   MATERIAL      NO.  NO.  NO.  NO. NO.  NO.  NO.  NO. NO.  NO.    NEXT
   ID       ID         SURF PTS  B-EL SP  H-EL HSP  CELL VSP SAMP S.S.   HEADER
----+----1----+----2----+----3----+----4----+----5----+----6----+----7----+----8
CCCCCCCC CCCCCCCC    xxxx xxxx xxxx xxxx xxxx xxxx xxxx xxxx xxxx xxx    xxxxxx*
----+----1----+----2----+----3----+----4----+----5----+----6----+----7----+----8
```

where:

C - any valid character (A - Z or a - z or 0 - 9 or SPACE)

x - any valid number (0 - 9)

* - indicates that the GMR header is continued on the next record

GMR HEADER (CARD 2)

The second GMR header card, which contains indexing information, has the following format:

		Column Fields
1)	Starting record number of coordinate data	(2 - 7)
2)	Number of records for coordinate data	(9 - 12)
3)	Starting record number of boundary element connectivity	(14 - 19)
4)	Number of records for boundary element connectivity data	(26 - 31)
5)	Starting record number of hole/insert element connectivity	(26 - 31)
6)	Number of records for hole/insert element connectivity data	(33 - 36)
7)	Starting record number of volume cell connectivity	(38 - 43)
8)	Number of records for volume cell connectivity data	(45 - 48)
9)	Starting record number of sampling surface element connectivity	(50 - 55)
10)	Number of sampling surface elements (Since sampling surface elements require only one record per element, this is also equal to the number of records for sampling surface element data)	(57 - 60)
11)	Indicates that the GMR header is continued on the next record	(80)

```
   1     2     3     4     5     6     7     8     9     10                  11
  1st.        1st.        1st.        1st.        1st   NELE
 COORD. NOR  B-ELEM NOR  H-ELEM NOR   CELL  NOR  SS-ELE NOR                   C
----+----1----+----2----+----3----+----4----+----5----+----6----+----7----+----8
 xxxxxx xxxx xxxxxx xxxx xxxxxx xxxx xxxxxx xxxx xxxxxx xxxx                  *
----+----1----+----2----+----3----+----4----+----5----+----6----+----7----+----8
```

where:

x - any valid number (0-9)

GMR HEADER (CARD 3)

The third GMR header card, which contains the reference (initial) temperature of the region and the temperature used at integration, is given in the following format:

		Column Fields
1)	Reference (initial) temperature of GMR (see TREF card in **GMR)	(2 - 13)
2)	Temperature used at integration	(15 - 26)

```
      1            2
  REFERENCE   INTEGRATION
 TEMPERATURE  TEMPERATURE
----+----1----+----2----+----3----+----4----+----5----+----6----+----7----+----8
  s.xxxxxEsxx  s.xxxxxEsxx
----+----1----+----2----+----3----+----4----+----5----+----6----+----7----+----8
```

where:

x - any valid number (0-9)

s - is the sign of the mantissa and exponent

. - is the decimal point and is required

E - is an exponent sign and is required

10.3.2 NODAL COORDINATES

The nodal coordinate records have the following format:

		Column Fields
1)	GMR ID	(1 - 8)
2)	Node type 1 = U, if the node is user defined = P, if the node is generated by the program	(10)
3)	Node type 2 = R regular coordinate = H hole or insert coordinate = S sampling point coordinate = U unreferenced (Node is not contained in element nor cell connectivity and does not have results associated with it)	(12)
4)	Node ID	(16 - 21)
5)	Format identifier* (Either a SPACE or the letter M, where M stands for Modified format)	(23)
6)	x coordinate (or r coordinate)	(24 - 34) or (25 - 38)*
7)	y coordinate (or z coordinate)	(37 - 47) or (40 - 53)*
8)	z coordinate	(50 - 60) or (55 - 68)*

Default Format - If column 23 is blank, then this record will have the following format:

```
    1    2 3     4    5    6            7            8
   GMR   NODE   NODE       X            Y            Z
   ID    TYPE    ID  FI COORDINATE   COORDINATE   COORDINATE
----+----1----+----2----+----3----+----4----+----5----+----6----+----7----+----8
CCCCCCCC C C   xxxxxx  s.xxxxxEsxx  s.xxxxxEsxx  s.xxxxxEsxx
----+----1----+----2----+----3----+----4----+----5----+----6----+----7----+----8
```

where:

C - any valid character (A - Z or a - z or 0 - 9 or SPACE)
x - any valid number (0 - 9)
s - is the sign of the mantissa and the exponent
. - is the decimal point and is required
E - is an exponent sign and is required

* There are two formats used for this card. The Default format and the Modified format. GPBEST will always produce the Default format unless the card 'NEUTRAL MODIFIED' is included in the **CASE input.

Modified Format - If column 23 contains the letter M, then this record will have the following format:

```
    1    2 3     4    5       6               7             8
   GMR   NODE   NODE          X               Y             Z
   ID    TYPE    ID  FI   COORDINATE      COORDINATE    COORDINATE
----+----1----+----2----+----3----+----4----+----5----+----6----+----7----+----8
CCCCCCCC C C   xxxxxx M s.xxxxxxxxEsxx s.xxxxxxxxEsxx s.xxxxxxxxEsxx
----+----1----+----2----+----3----+----4----+----5----+----6----+----7----+----8
```

where:

C - any valid character (A - Z or a - z or 0 - 9 or SPACE)

M - the character ‘M’

x - any valid number (0 - 9)

s - is the sign of the mantissa and the exponent

. - is the decimal point and is required

E - is an exponent sign and is required

10.3.3 BOUNDARY ELEMENT CONNECTIVITY

BOUNDARY CONNECTIVITY (CARD 1)

The first boundary element connectivity card has the following format:

		Column Fields
1)	Surface ID	(1 - 8)
2)	Number of geometric nodes (plus additional nodes corresponding to higher order functional quantities) †	(10 - 11)
3)	Element type (special element indicator) = R for regular element = P for program-generated element (internal cell) = C for user-defined cell	(13)
4)	Element type (functional variation) = B for linear = C for quadratic Serendipity = D for quadratic Lagrangian = G for quartic Serendipity = H for quartic Lagrangian	(15)
5)	Boundary element ID number	(18 - 23)
6)	ID number of first node of boundary element	(25 - 30)
7)	ID number of second node of boundary element	(32 - 37)
8)	ID number of third node of boundary element	(39 - 44)
9)	ID number of fourth node of boundary element	(46 - 51)
10)	ID number of fifth node of boundary element	(53 - 58)
11)	ID number of sixth node of boundary element	(60 - 65)
12)	ID number of seventh node of boundary element	(67 - 72)
13)	ID number of eighth node of boundary element	(74 - 79)
14)	Continuation flag	(80)

```
   1     2  3 4    5     6      7      8      9      10     11     12     13  14
  SURF.  NO ELEM  ELEM  NODE   NODE   NODE   NODE   NODE   NODE   NODE   NODE
   ID    PT TYP    ID    1      2      3      4      5      6      7      8    C
----+----1----+----2----+----3----+----4----+----5----+----6----+----7----+----8
CCCCCCCC xx C C  xxxxxx xxxxxx xxxxxx xxxxxx xxxxxx xxxxxx xxxxxx xxxxxx xxxxxx*
----+----1----+----2----+----3----+----4----+----5----+----6----+----7----+----8
```

where:

C - any valid character (A - Z or a - z or 0 - 9 or SPACE)
x - any valid number (0-9)
* - either * or blank

† In 2-D, the number of nodes are 3 or 5 (6 or 8 with internal cells). In 3-D, the number of nodes are 6,8,9,15,17 or 25. See figures on following page for diagrams of connectivity order.

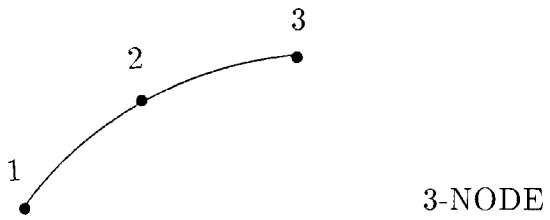

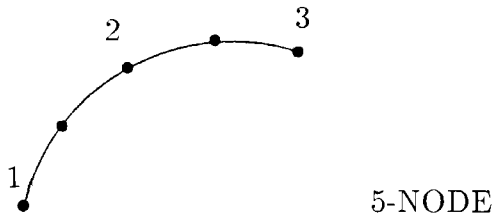

Figure of Neutral File Connectivity for Two-Dimensional
Boundary Elements - Functional Variation

Note: If the CONTour card is input in **CASE, then internal cell connectivity is output in place of boundary element connectivity (see next page).

For general axisymmetry, 3-D element connectivity is output (see next page).

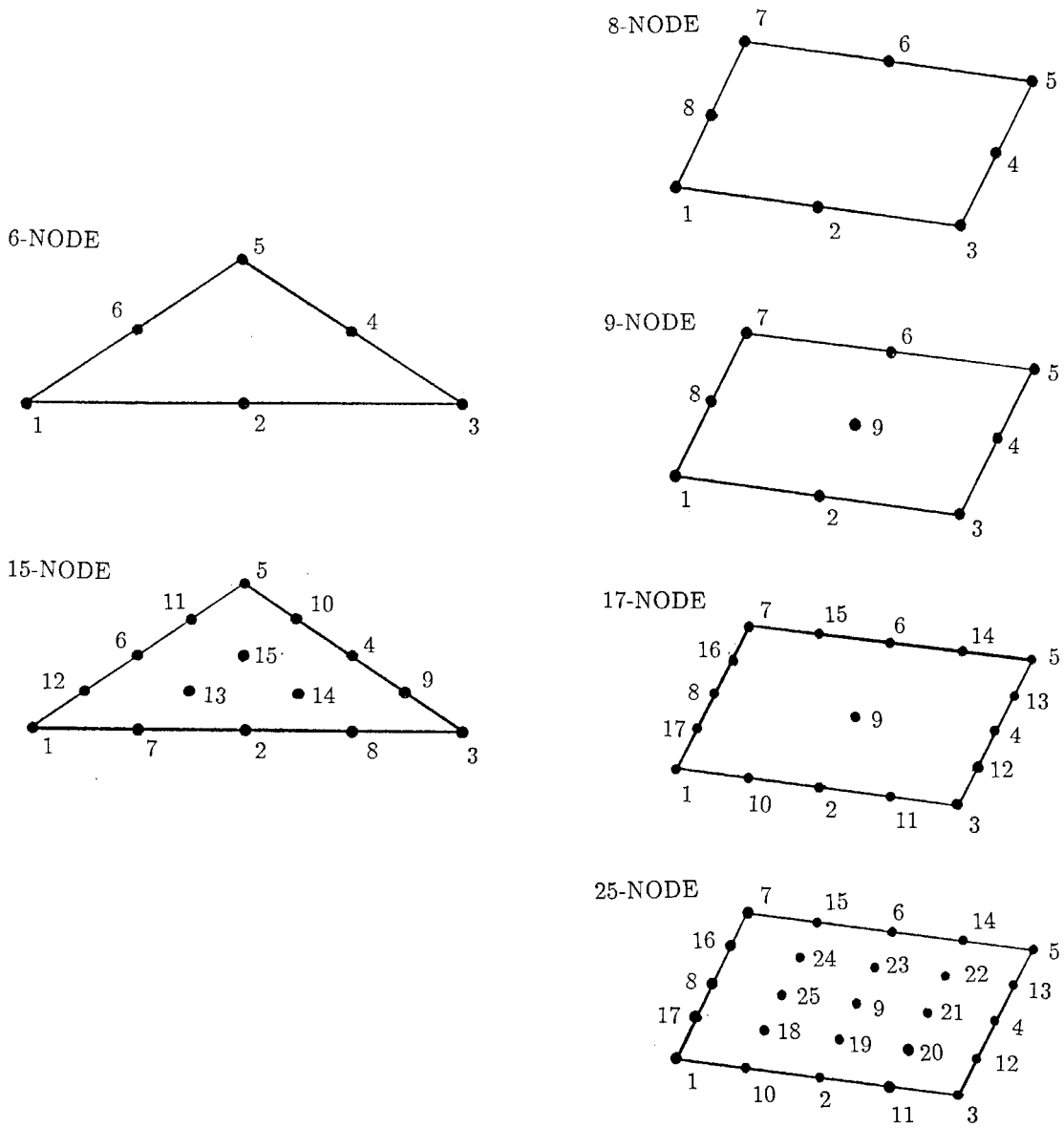

Figure of Neutral File Connectivity for Three-Dimensional
Boundary Elements and Two-Dimensional Volume Cells

BOUNDARY CONNECTIVITY (CARD 2)

The second boundary element connectivity card has the following format:

		Column Fields
1)	ID number of ninth node of boundary element	(4 - 9)
2)	ID number of tenth node of boundary element	(11 - 16)
3)	ID number of eleventh node of boundary element	(18 - 23)
4)	ID number of twelfth node of boundary element	(25 - 30)
5)	ID number of thirteenth node of boundary element	(32 - 37)
6)	ID number of fourteenth node of boundary element	(39 - 44)
7)	ID number of fifteenth node of boundary element	(46 - 51)
8)	ID number of sixteenth node of boundary element	(53 - 58)
9)	ID number of seventeenth node of boundary element	(60 - 65)
10)	ID number of eighteenth node of boundary element	(67 - 72)
11)	ID number of nineteenth node of boundary element	(74-79)
12)	Continuation flag	(80)

```
     1      2      3      4      5      6      7      8      9      10     11 12
    NODE   NODE   NODE   NODE   NODE   NODE   NODE   NODE   NODE   NODE   NODE
     9      10     11     12     13     14     15     16     17     18     19  C
----+----1----+----2----+----3----+----4----+----5----+----6----+----7----+----8
   xxxxxx xxxxxx xxxxxx xxxxxx xxxxxx xxxxxx xxxxxx xxxxxx xxxxxx xxxxxx xxxxxx*
----+----1----+----2----+----3----+----4----+----5----+----6----+----7----+----8
```

where:

C - any valid character (A - Z or a - z or 0 - 9 or SPACE)

x - any valid number (0-9)

* - either * or blank

Note: May be continued on third card, if necessary, using the format of card 2.

10.3.4 HOLE ELEMENT CONNECTIVITY

HOLE ELEMENT CONNECTIVITY (CARD 1)

The first hole connectivity card has the following format:

		Column Fields
1)	Hole indicator (= HOLE)	(1 - 4)
2)	Number of user-defined geometric point in the hole element	(6 - 7)
3)	Element type (number of functional variational nodes in the circumferential direction)	(9)
4)	Element type (functional variation in axial direction) = L for linear = Q for quadratic	(11)
5)	Hole element ID number	(15 - 19)
6)	ID number of first node of hole element	(21 - 26)
7)	ID number of second node of hole element	(28 - 33)
8)	ID number of third node of hole element	(35 - 40)
9)	Radius of hole/insert	(42 - 53)
10)	Continuation flag (= * if the number of functional variational nodes in the circumferential direction (item #3) is greater than 1)	(80)

```
 1   2  3 4     5     6      7      8         9                                10
HOLE NO ELEM   ELEM  NODE   NODE   NODE     RADIUS
DEF. PT TYPE    ID    1      2      3      OF HOLE                             C
----+----1----+----2----+----3----+----4----+----5----+----6----+----7----+----8
HOLE xx C C   xxxxx xxxxxx xxxxxx xxxxxx  s.xxxxxEsxx                           *
----+----1----+----2----+----3----+----4----+----5----+----6----+----7----+----8
```

where:

C - any valid character (A - Z or a - z or 0 - 9 or SPACE)
x - any valid number (0 - 9)
s - is the sign of the mantissa and the exponent
. - is the decimal point and is required
E - is an exponent sign and is required
* - either * or blank

HOLE CONNECTIVITY (CARD 2)

If the hole/insert has a trigonometric functional variation in the circumferential direction, the connectivity (generated by the program) is defined in the following format:

		Column Fields
1)	Number of total functional variational nodes in this element	(1 - 2)
2)	ID number of first node	(4 - 9)
3)	ID number of second node	(11 - 16)
4)	ID number of third node	(18 - 23)
5)	ID number of fourth node	(25 - 30)
6)	ID number of fifth node	(32 - 37)
7)	ID number of sixth node	(39 - 44)
8)	ID number of seventh node	(46 - 51)
9)	ID number of eighth node	(53 - 58)
10)	ID number of ninth node	(60 - 65)

```
1    2      3      4      5      6      7      8      9      10
NO  NODE   NODE   NODE   NODE   NODE   NODE   NODE   NODE   NODE
PT   1      2      3      4      5      6      7      8      9
----+----1----+----2----+----3----+----4----+----5----+----6----+----7----+----8
xx xxxxxx xxxxxx xxxxxx xxxxxx xxxxxx xxxxxx xxxxxx xxxxxx xxxxxx
----+----1----+----2----+----3----+----4----+----5----+----6----+----7----+----8
```

where:

x - any valid number (0-9)

10.3.5 SAMPLING SURFACE ELEMENT CONNECTIVITY

The sampling surface element connectivity card has the following format:

		Column Fields
1)	Sampling surface ID	(1 - 8)
2)	Number of geometric points in the element	(10)
3)	Sampling surface element ID	(12 - 17)
4)	ID number of first node of element	(19 - 24)
5)	ID number of second node of element	(26 - 31)
6)	ID number of third node of element	(33 - 38)
7)	ID number of fourth node of element	(40 - 45)
8)	ID number of fifth node of element	(47 - 52)
9)	ID number of sixth node of element	(54 - 59)
10)	ID number of seventh node of element	(61 - 66)
11)	ID number of eighth node of element	(68 - 73)
12)	ID number of ninth node of element	(75 - 80)

```
   1     2   3      4      5      6      7      8      9      10     11     12
S-SURF. NO. ELEM.  NODE   NODE   NODE   NODE   NODE   NODE   NODE   NODE   NODE
   ID.  PT   ID     1      2      3      4      5      6      7      8      9
----+----1----+----2----+----3----+----4----+----5----+----6----+----7----+----8
CCCCCCCC x xxxxxx xxxxxx xxxxxx xxxxxx xxxxxx xxxxxx xxxxxx xxxxxx xxxxxx xxxxxx
----+----1----+----2----+----3----+----4----+----5----+----6----+----7----+----8
```

where:

C - any valid character (A - Z or a - z or 0 - 9 or SPACE)

x - any valid number (0 - 9)

10.4 INTERFACE DESCRIPTION

An interface description is defined for each interface (**INTE) record in the GPBEST data set.

10.4.1 INTERFACE HEADER

The interface header consists of one record. Each interface set has an interface header which contains indexing information.

INTERFACE HEADER

The interface header card has the following format:

		Column Fields
1)	Interface identifier (INTE):	(1 - 8)
2)	Interface type : INTERFAC - indicates a standard interface CYCLIC - indicates a cyclic symmetry interface	(10 - 17)
3)	Starting record number for GMR1 information:	(19 - 24)
4)	Starting record number for GMR2 information:	(26 - 31)
5)	Starting record number for interface properties:	(47 - 52)
6)	Type of interface connection: (=0 other ; =1 bonded ; =2 sliding) (=3 spring/resistance ; =4 generalized convection)	(57 - 58)
7)	Local interface condition: (=0 not local ; =1 local)	(60 - 61)
8)	Record number of header for next interface or boundary condition (= 0 for last interface/boundary condition)	(73 - 79)

```
   1       2        3      4                    5       6   7                8
 IDENT.   INTE     1ST    1ST                  1ST    INTE LOC             NEXT
 (INTE)   NAME     GMR1   GMR2                 PROP   TYPE                HEADER
----+----1----+----2----+----3----+----4----+----5----+----6----+----7----+----8
CCCCCCCC CCCCCCCC xxxxxx xxxxxx               xxxxxx    xx xx           xxxxxxx
----+----1----+----2----+----3----+----4----+----5----+----6----+----7----+----8
```

where:

C - any valid character (A - Z or a - z or 0 - 9 or SPACE)

x - any valid number (0 - 9)

10.4.2 FIRST GEOMETRY SET RECORD

The ID's of the first GMR, the corresponding surface (SURF) and the number of elements and source point that make up the interface condition are defined in the following format:

		Column Fields
1)	GMR ID:	(1 - 8)
2)	Surface ID or HOLE :	(10 - 17)
3)	Total number of elements :	(22 - 25)
4)	Total number of source points :	(27 - 30)

```
   1         2         3    4
  GMR     SURFACE     NO.   NO.
   ID       ID       ELEM SPOINT
----+----1----+----2----+----3----+----4----+----5----+----6----+----7----+----8
CCCCCCCC CCCCCCCC    xxxx xxxx
----+----1----+----2----+----3----+----4----+----5----+----6----+----7----+----8
```

where:

C - any valid character (A - Z or a - z or 0 - 9 or SPACE)

x - any valid number (0 - 9)

10.4.3 ELEMENT LIST - 1

The list of user element IDs associated with the surface on the first GMR in the interface condition has the following format:

		Column Fields
1)	ID of first element	(2 - 6)
2)	ID of second element	(8 - 12)
3)	ID of third element	(14 - 18)
4)	ID of fourth element	(20 - 24)
5)	ID of fifth element	(26 - 30)
6)	ID of sixth element	(32 - 36)
7)	ID of seventh element	(38 - 42)
8)	ID of eighth element	(44 - 48)
9)	ID of ninth element	(50 - 54)
10)	ID of tenth element	(56 - 60)
11)	ID of eleventh element	(62 - 66)
12)	ID of twelfth element	(68 - 72)
13)	ID of thirteenth element	(74 - 78)
14)	Link the next record identifier:	(80 - 80)

```
   1     2     3     4     5     6     7     8     9    10    11    12    13  14
  ELEM  ELEM  ELEM  ELEM  ELEM ELEM  ELEM   ELEM  ELEM ELEM  ELEM  ELEM  ELEM
   1     2     3     4     5     6     7     8     9    10    11    12    13 LINK
----+----1----+----2----+----3----+----4----+----5----+----6----+----7----+----8
 xxxxx xxxxx xxxxx xxxxx xxxxx xxxxx xxxxx xxxxx xxxxx xxxxx xxxxx xxxxx xxxxx *
----+----1----+----2----+----3----+----4----+----5----+----6----+----7----+----8
```

where:

x - any valid number (0 - 9)

* - either * or blank

Note: The '*' character at the 80th column position will identify whether the next record of data is 'LINKED' to the current record. This occurs when the number of elements exceeds the limit of 13 on this record and must be continued onto more records with the same format as this one.

10.4.4 SOURCE POINT LIST - 1

The list of user node IDs signifying the source points associated with the elements on the surface in the interface condition has the following format:

		Column Fields
1)	ID of first node	(2 - 7)
2)	ID of second node	(9 - 14)
3)	ID of third node	(16 - 21)
4)	ID of fourth node	(23 - 28)
5)	ID of fifth node	(30 - 35)
6)	ID of sixth node	(37 - 42)
7)	ID of seventh node	(44 - 49)
8)	ID of eighth node	(51 - 56)
9)	ID of ninth node	(58 - 63)
10)	ID of tenth node	(65 - 70)
11)	ID of eleventh node	(72 - 77)
14)	Link the next record identifier:	(80 - 80)

```
   1      2      3      4      5      6      7      8      9      10     11   12
  NODE   NODE   NODE   NODE   NODE   NODE   NODE   NODE   NODE   NODE   NODE
   1      2      3      4      5      6      7      8      9      10     11 LINK
----+----1----+----2----+----3----+----4----+----5----+----6----+----7----+----8
 xxxxxx xxxxxx xxxxxx xxxxxx xxxxxx xxxxxx xxxxxx xxxxxx xxxxxx xxxxxx xxxxxx  *
----+----1----+----2----+----3----+----4----+----5----+----6----+----7----+----8
```

where:

x - any valid number (0 - 9)

* - either * or blank

Note: The '*' character at the 80th column position will identify whether the next record of data is 'LINKED' to the current record. This occurs when the number of nodes exceeds the limit of 11 on this record and must be continued onto more records with the same format as this one.

10.4.5 SECOND GEOMETRY SET RECORD

The ID's of the second GMR, the corresponding surface (SURF) and the number of elements and source point that make up the interface condition are defined in the following format:

		Column Fields
1)	GMR ID:	(1 - 8)
2)	Surface ID or HOLE :	(10 - 17)
3)	Total number of elements :	(22 - 25)
4)	Total number of source points :	(27 - 30)

```
   1         2         3    4
  GMR     SURFACE     NO.  NO.
   ID       ID       ELEM SPOINT
----+----1----+----2----+----3----+----4----+----5----+----6----+----7----+----8
CCCCCCCC CCCCCCCC    xxxx xxxx
----+----1----+----2----+----3----+----4----+----5----+----6----+----7----+----8
```

where:

C - any valid character (A - Z or a - z or 0 - 9 or SPACE)

x - any valid number (0 - 9)

10.4.6 ELEMENT LIST - 2

The list of user element IDs associated with the surface on the second GMR in the interface condition has the following format:

		Column Fields
1)	ID of first element	(2 - 6)
2)	ID of second element	(8 - 12)
3)	ID of third element	(14 - 18)
4)	ID of fourth element	(20 - 24)
5)	ID of fifth element	(26 - 30)
6)	ID of sixth element	(32 - 36)
7)	ID of seventh element	(38 - 42)
8)	ID of eighth element	(44 - 48)
9)	ID of ninth element	(50 - 54)
10)	ID of tenth element	(56 - 60)
11)	ID of eleventh element	(62 - 66)
12)	ID of twelfth element	(68 - 72)
13)	ID of thirteenth element	(74 - 78)
14)	Link the next record identifier:	(80 - 80)

```
   1     2     3     4     5     6     7     8     9    10    11    12    13  14
  ELEM  ELEM  ELEM  ELEM  ELEM ELEM  ELEM   ELEM  ELEM ELEM  ELEM  ELEM  ELEM
   1     2     3     4     5     6     7     8     9    10    11    12    13 LINK
----+----1----+----2----+----3----+----4----+----5----+----6----+----7----+----8
 xxxxx xxxxx xxxxx xxxxx xxxxx xxxxx xxxxx xxxxx xxxxx xxxxx xxxxx xxxxx xxxxx *
----+----1----+----2----+----3----+----4----+----5----+----6----+----7----+----8
```

where:

x - any valid number (0 - 9)

* - either * or blank

Note: The '*' character at the 80th column position will identify whether the next record of data is 'LINKED' to the current record. This occurs when the number of elements exceeds the limit of 13 on this record and must be continued onto more records with the same format as this one.

10.4.7 SOURCE POINT LIST - 2

The list of user node IDs making up the source points associated with the elements on the surface in the second GMR in the interface condition has the following format:

		Column Fields
1)	ID of first node	(2 - 7)
2)	ID of second node	(9 - 14)
3)	ID of third node	(16 - 21)
4)	ID of fourth node	(23 - 28)
5)	ID of fifth node	(30 - 35)
6)	ID of sixth node	(37 - 42)
7)	ID of seventh node	(44 - 49)
8)	ID of eighth node	(51 - 56)
9)	ID of ninth node	(58 - 63)
10)	ID of tenth node	(65 - 70)
11)	ID of eleventh node	(72 - 77)
14)	Link the next record identifier:	(80 - 80)

```
   1      2      3      4      5      6      7      8      9      10     11   12
  NODE   NODE   NODE   NODE   NODE   NODE   NODE   NODE   NODE   NODE   NODE
   1      2      3      4      5      6      7      8      9      10     11 LINK
----+----1----+----2----+----3----+----4----+----5----+----6----+----7----+----8
 xxxxxx xxxxxx xxxxxx xxxxxx xxxxxx xxxxxx xxxxxx xxxxxx xxxxxx xxxxxx xxxxxx  *
----+----1----+----2----+----3----+----4----+----5----+----6----+----7----+----8
```

where:

x - any valid number (0 - 9)

* - either * or blank

Note: The '*' character at the 80th column position will identify whether the next record of data is 'LINKED' to the current record. This occurs when the number of nodes exceeds the limit of 11 on this record and must be continued onto more records with the same format as this one.

10.4.8 FIT, OFFSET AND CONTACT INTERFACE RECORD

The interface fit, the interface offset and the contact interface data have the following format:

		Column Fields
1)	Interference fit flag: (= 0 if not specified) (= 1 if specified)	(1 - 2)
2)	Value of interference fit: (=0.0 if item #1 is zero)	(4 - 14)
3)	Contact interference flag: (= 0 if not specified) (= 1 if specified)	(16 - 17)
4)	Value of friction on contact interface (= 0.0 if item #3 is zero)	(19 - 29)
5)	Offset flag: (= 0 if not specified) (= 1 if offset mismatch is specified) (= 2 if offset value is specified)	(31 - 32)
6)	Value at offset (ELEMENT BASED) (= 0.0 if item #5 is zero or one)	(34 - 44)

```
1        2    3         4    5        6
FIT   INTERF CONT   CONTACT OFFS   OFFSET
FLAG   FIT   FLAG  FRICTION FLAG   VALUE
----+----1----+----2----+----3----+----4----+----5----+----6----+----7----+----8
xx s.xxxxxEsxx xx s.xxxxxEsxx xx s.xxxxxEsxx
----+----1----+----2----+----3----+----4----+----5----+----6----+----7----+----8
```

where:

x - any valid number (0-9)
s - is the sign of the mantissa and exponent
. - is the decimal point and is required
E - is an exponent sign and is required

10.4.9 THERMAL RESISTANCE OR GENERALIZED CONVECTION RECORD

The thermal resistance and generalized convection data for the interface has the following format:

		Column Fields
1)	Thermal resistance flag: (IFLAG = 0 if neither is specified) (IFLAG = 1 if thermal resistance) (IFLAG = 2 if generalized convection)	(1 - 2)
2)	Thermal resistance value (if IFLAG = 1) or Constant A1 (if IFLAG = 2) (=0.0 if IFLAG = 0)	(4 - 15)
3)	Constant B1 for generalized convection (=0.0 if IFLAG = 0 or if IFLAG = 1)	(17 - 28)
4)	Constant TA1 for generalized convection (=0.0 if IFLAG = 0 or if IFLAG = 1)	(30 - 41)
5)	Constant A2 for generalized convection (=0.0 if IFLAG = 0 or if IFLAG = 1)	(43 - 54)
6)	Constant B2 for generalized convection (=0.0 if IFLAG = 0 or if IFLAG = 1)	(56 - 67)
7)	Constant TA2 for generalized convection (=0.0 if IFLAG = 0 or if IFLAG = 1)	(69 - 80)

```
 1       2            3           4             5           6            7
THER  RESIST/      CONSTANT    CONSTANT     CONSTANT     CONSTANT     CONSTANT
FLAG  CONST-A1       B1          TA1           A2           B2           TA2
----+----1----+----2----+----3----+----4----+----5----+----6----+----7----+----8
xx  s.xxxxxEsxx  s.xxxxxEsxx  s.xxxxxEsxx  s.xxxxxEsxx  s.xxxxxEsxx  s.xxxxxEsxx
----+----1----+----2----+----3----+----4----+----5----+----6----+----7----+----8
```

where:

x - any valid number (0 - 9)
s - is the sign of the mantissa and the exponent
. - is the decimal point and is required
E - is an exponent sign and is required

10.4.10 SPRING INTERFACE RECORD

The spring coefficient data associated with a linear interface condition (i.e. SPRING card not used along with NONL card) has the following format:

		Column Fields
1)	Spring flag: (=0 if not present) (=1 if spring interface present)	(1 - 2)
2)	Spring coefficient normal to the interface (=0.0 if not present)	(4 - 15)
3)	Spring coefficient tangential to the interface (=0.0 if not present)	(17 - 28)
4)	Initial deflection flag (0 = no deflection) (1= spring has an initial deflection)	(43-44)
5)	Value of initial deflection in spring	(45-56)

```
 1       2            3                  4      5
SPRNG SPRING        SPRING               ID   INITIAL
FLAG  COEFF-N      COEFF-T               FLG  DEFLECTION
----+----1----+----2----+----3----+----4----+----5----+----6----+----7----+----8
xx  s.xxxxxEsxx  s.xxxxxEsxx              xx s.xxxxxEsxx
----+----1----+----2----+----3----+----4----+----5----+----6----+----7----+----8
```

where:

x - any valid number (0 - 9)
s - is the sign of the mantissa and the exponent
. - is the decimal point and is required
E - is an exponent sign and is required

10.4.11 INTERFACE SYMMETRY RECORD

Cyclic symmetry conditions may be prescribed for an interface. The associated parameters are written to the GPBEST neutral file in the following format:

		Column Fields
1)	Symmetry Flag (=0 if non prescribed; =1 if CYCLIC)	(1 - 2)
2)	Angle of rotation (if CYCLIC) (=0.0 if not present)	(4 - 15)
3)	X-Direction for the axis of rotation (if CYCLIC) (=0.0 in 2D, or if not present)	(17 - 28)
4)	Y-Direction for the axis of rotation (if CYCLIC) (=0.0 in 2D, or if not present)	(30 - 41)
5)	Z-Direction for the axis of rotation (if CYCLIC) (=0.0 in 2D, or if not present)	(43 - 54)

```
 1       2            3           4            5
SYMM   ANGLE     X-DIRECTION  Y-DIRECTION  Z-DIRECTION
FLAG
----+----1----+----2----+----3----+----4----+----5----+----6----+----7----+----8
xx  s.xxxxxEsxx  s.xxxxxEsxx  s.xxxxxEsxx  s.xxxxxEsxx
----+----1----+----2----+----3----+----4----+----5----+----6----+----7----+----8
```

where:

- x - any valid number (0 - 9)
- s - is the sign of the mantissa and the exponent
- . - is the decimal point and is required
- E - is an exponent sign and is required

10.5 BOUNDARY CONDITION DESCRIPTION

A boundary condition description is defined for each boundary condition (**BCSE) record in the GPBEST data set.

10.5.1 BOUNDARY CONDITION HEADER

The boundary condition header consists of two records. Each boundary condition set has a boundary condition header which contains properties and indexing information.

BOUNDARY CONDITION HEADER (CARD 1)

The first boundary condition header card has the following format:

		Column Fields
1)	Boundary condition identifier (BCSE):	(1 - 8)
2)	BCSET ID :	(10 - 17)
3)	Starting record number for GMR information:	(19 - 24)
4)	Number of time values specified: (one value assumed for zero time values)	(33 - 38)
5)	Starting record number for time-based input: (=0 if not present)	(40 - 45)
6)	Type of boundary condition: (=1 VALUE ; =2 RELATION)	(57 - 58)
7)	Local boundary condition specifier: (=0 not LOCAL ; =1 LOCAL)	(60 - 61)
8)	Variable boundary condition specifier: (=0 not VARIABLE ; =1 VARIABLE)	(63 - 64)
9)	Record number of header for next boundary condition (= 0 for last boundary condition)	(73 - 79)
10)	Link to the next record identifier	(80 - 80)

```
   1       2        3             4      5              6   7  8            9
 IDENT.   BCSE     1ST           NO.    1ST           BCSE LOC            NEXT
 (BCSE)   NAME     GMR1         TIMES   TIME          TYPE    VAR         HEADER
----+----1----+----2----+----3----+----4----+----5----+----6----+----7----+----8
CCCCCCCC CCCCCCCC xxxxxx        xxxxxx xxxxxx           xx xx xx        xxxxxxx*
----+----1----+----2----+----3----+----4----+----5----+----6----+----7----+----8
```

where:

C - any valid character (A - Z or a - z or 0 - 9 or SPACE)
x - any valid number (0 - 9)
* - indicates the boundary condition header is continued on the next record

BOUNDARY CONDITION HEADER (CARD 2)

The second boundary condition header card contains indexing information and has the following format:

		Column Fields
1)	Number of degrees of freedom specified: (=0 for RELATION BCSET)	(1 - 2)
2)	Starting record number for first degree of freedom: (=0 for RELATION BCSET)	(7 - 12)
3)	Starting record number for second degree of freedom: (=0 if not present)	(14 - 19)
4)	Starting record number for third degree of freedom: (=0 if not present)	(21 - 26)
5)	Starting record number for fourth degree of freedom: (=0 if not present)	(28 - 33)

```
 1       2      3     4      5
NO.     1ST    1ST   1ST    1ST
DOF     DOF1   DOF2  DOF3   DOF4
----+----1----+----2----+----3----+----4----+----5----+----6----+----7----+----8
xx    xxxxxx xxxxxx xxxxxx xxxxxx
----+----1----+----2----+----3----+----4----+----5----+----6----+----7----+----8
```

where:

C - any valid character (A - Z or a - z or 0 - 9 or SPACE)

x - any valid number (0 - 9)

10.5.2 GEOMETRY DEFINITION RECORD

The IDs of the GMR, the corresponding surface (SURF) and the number of elements and source points that make up the boundary condition are defined in the following format:

		Column Fields
1)	GMR ID:	(1 - 8)
2)	Surface ID or HOLE :	(10 - 17)
3)	Total number of elements :	(22 - 25)
4)	Total number of source points :	(27 - 30)

```
   1         2         3    4
  GMR     SURFACE     NO.   NO.
   ID       ID       ELEM SPOINT
----+----1----+----2----+----3----+----4----+----5----+----6----+----7----+----8
CCCCCCCC CCCCCCCC    xxxx xxxx
----+----1----+----2----+----3----+----4----+----5----+----6----+----7----+----8
```

where:

C - any valid character (A - Z or a - z or 0 - 9 or SPACE)

x - any valid number (0 - 9)

10.5.3 ELEMENT LIST

The list of user element IDs associated with the surface on the GMR in the boundary condition has the following format:

		Column Fields
1)	ID of first element	(2 - 6)
2)	ID of second element	(8 - 12)
3)	ID of third element	(14 - 18)
4)	ID of fourth element	(20 - 24)
5)	ID of fifth element	(26 - 30)
6)	ID of sixth element	(32 - 36)
7)	ID of seventh element	(38 - 42)
8)	ID of eighth element	(44 - 48)
9)	ID of ninth element	(50 - 54)
10)	ID of tenth element	(56 - 60)
11)	ID of eleventh element	(62 - 66)
12)	ID of twelfth element	(68 - 72)
13)	ID of thirteenth element	(74 - 78)
14)	Link the next record identifier:	(80 - 80)

```
   1     2     3     4     5     6     7     8     9    10    11    12    13  14
  ELEM  ELEM  ELEM  ELEM  ELEM ELEM  ELEM   ELEM  ELEM ELEM  ELEM  ELEM  ELEM
   1     2     3     4     5     6     7     8     9    10    11    12    13 LINK
----+----1----+----2----+----3----+----4----+----5----+----6----+----7----+----8
 xxxxx xxxxx xxxxx xxxxx xxxxx xxxxx xxxxx xxxxx xxxxx xxxxx xxxxx xxxxx xxxxx *
----+----1----+----2----+----3----+----4----+----5----+----6----+----7----+----8
```

where:

x - any valid number (0 - 9)

* - either * or blank

Note: The '*' character at the 80th column position will identify whether the next record of data is 'LINKED' to the current record. This occurs when the number of elements exceeds the limit of 13 on this record and must be continued onto more records with the same format as this one.

10.5.4 SOURCE POINT LIST

The list of user node IDs specifying the source points associated with the elements on the surface in the boundary condition has the following format:

		Column Fields
1)	ID of first node	(2 - 7)
2)	ID of second node	(9 - 14)
3)	ID of third node	(16 - 21)
4)	ID of fourth node	(23 - 28)
5)	ID of fifth node	(30 - 35)
6)	ID of sixth node	(37 - 42)
7)	ID of seventh node	(44 - 49)
8)	ID of eighth node	(51 - 56)
9)	ID of ninth node	(58 - 63)
10)	ID of tenth node	(65 - 70)
11)	ID of eleventh node	(72 - 77)
14)	Link the next record identifier:	(80 - 80)

```
   1      2      3      4      5      6      7      8      9      10     11   12
  NODE   NODE   NODE   NODE   NODE   NODE   NODE   NODE   NODE   NODE   NODE
   1      2      3      4      5      6      7      8      9      10     11 LINK
----+----1----+----2----+----3----+----4----+----5----+----6----+----7----+----8
 xxxxxx xxxxxx xxxxxx xxxxxx xxxxxx xxxxxx xxxxxx xxxxxx xxxxxx xxxxxx xxxxxx  *
----+----1----+----2----+----3----+----4----+----5----+----6----+----7----+----8
```

where:

x - any valid number (0 - 9)

* - either * or blank

Note: The '*' character at the 80th column position will identify whether the next record of data is 'LINKED' to the current record. This occurs when the number of nodes exceeds the limit of 11 on this record and must be continued onto more records with the same format as this one.

10.5.5 SPRING OR CONVECTION RECORD

NOTE : ONLY FOR RELATION TYPE-BOUNDARY CONDITION SET

The spring and convection data required with a RELATION-type BCSET has the following format. The SPRING data relates to an ELASTIC analysis, while CONVECTION data relates to a CTHERM analysis type.

		Column Fields
1)	Spring / Convection Identifier (='SPRI' if SPRING; ='CONV' for CONVECTION)	(1 - 8)
2)	Component direction for SPRI relation (is left BLANK if CONV is specified)	(10 - 11)
3)	Spring constant if SPRI specified or Film coefficient if CONV specified (Note: this entry is the real part of spring constant for a free vibration analysis)	(13 - 24)
4)	Imaginary part of spring constant if SPRI specified and complex analysis type or ambient temperature if CONV specified (is left BLANK if time-dependent ambient temperature prescribed) (Note: Time-dependent ambient temperature is handled similar to other time-dependent data items)	(26 - 37)

```
    1     2        3          4
  SPRI  DIRE    SPR-CONST   SPR-CONST
 /CONV         /FILM-COEF  /AMB.TEMP
----+----1----+----2----+----3----+----4----+----5----+----6----+----7----+----8
CCCCCCCC xx  s.xxxxxEsxx  s.xxxxxEsxx
----+----1----+----2----+----3----+----4----+----5----+----6----+----7----+----8
```

where:

C - any valid character (A - Z or a - z or 0 - 9 or SPACE)
x - any valid number (0 - 9)
s - is the sign of the mantissa and the exponent
. - is the decimal point and is required
E - is an exponent sign and is required

10.5.6 LIST OF TIME VALUES

NOTE: THIS RECORD IS ONLY PRESENT IF THE NUMBER OF USER-SPECIFIED TIME VALUES ARE NOT ZERO

The list of user-specified time values at which the boundary conditions are prescribed is written to the GPBEST neutral file in the following format. This record is not included if no times are specified. For all RELATION-type BCSETs, except for the time-dependent ambient temperature case, this record is ignored.

		Column Fields
1)	First time value	(2 - 13)
2)	Second time value	(15 - 26)
3)	Third time value	(28 - 39)
4)	Fourth time value	(41 - 52)
5)	Fifth time value	(54 - 65)
6)	Sixth time value	(67 - 78)
7)	Link the next record identifier:	(80 - 80)

```
       1            2             3           4            5            6      7
   TIME VALUE   TIME VALUE    TIME VALUE  TIME VALUE   TIME VALUE  TIME VALUE
       1            2             3           4            5            6    LNK
----+----1----+----2----+----3----+----4----+----5----+----6----+----7----+----8
  s.xxxxxEsxx  s.xxxxxEsxx  s.xxxxxEsxx  s.xxxxxEsxx  s.xxxxxEsxx  s.xxxxxEsxx *
----+----1----+----2----+----3----+----4----+----5----+----6----+----7----+----8
```

where:

x - any valid number (0 - 9)

s - is the sign of the mantissa and the exponent

. - is the decimal point and is required

E - is an exponent sign and is required

* - either * or blank

Note: The '*' character at the 80th column position will identify whether the next record of data is 'LINKED' to the current record. This occurs when the number of time values exceeds the limit of 6 on this record and must be continued onto more records with the same format as this one.

10.5.7 TYPE OF DEGREE OF FREEDOM

NOTE: ONLY FOR VALUE-TYPE BOUNDARY CONDITION SET EXCEPT TIME-DEPENDENT CONVECTION BOUNDARY CONDITION

The type of the degree of freedom which dictates the current boundary condition specification, along with the component (if relevent), is written in the following format. Notably, boundary conditions may be prescribed on a maximum of four degrees of freedom. Thus, the present record may be repeated four times in a single BCSET definition. This record must be followed by all prescribed values relating to this degree of freedom before the next degree of freedom is taken up.

		Column Fields
1)	Type of degree of freedom: (may be PRES, FLUX, DISP, TRAC, VELO or TEMP based on analysis type) (=TAMB for Time-dependent convection BCSET)	(1 - 8)
2)	Component of degree of freedom: (=0 if not relevent)	(10 - 11)
3)	Continuity identifier: (indicates next record must follow this record)	(80 - 80)

```
    1       2                                                                   3
  TYPE    COMP                                                               CONT
   DOF                                                                       FLAG
----+----1----+----2----+----3----+----4----+----5----+----6----+----7----+----8
CCCCCCCC   xx                                                                  *
----+----1----+----2----+----3----+----4----+----5----+----6----+----7----+----8
```

where:

C - any valid character (A - Z or a - z or 0 - 9 or SPACE)

x - any valid number (0 - 9)

10.5.8 VALUES SPECIFIED FOR DEGREE OF FREEDOM

NOTE: THIS RECORD FOLLOWS THE PREVIOUS WHICH ESTABLISHED THE DEGREE OF FREEDOM TYPE

The user-specified values of the boundary conditions prescribed for a particular degree of freedom is written to the GPBEST neutral file in the following format. The record always starts with the value of the time at which these BCSET values are prescribed. This is followed by the value of the boundary condition at each source point in the source point list (specified earlier) with the same order as the source points. If more than five points are present in the source point list, then this record is repeated with the same format until all source points are accounted for.

		Column Fields
1)	Time value	(2 - 13)
	(=0.0 if no time is specified or relevent)	
2)	Value at first source point	(15 - 26)
2)	Value at second source point	(28 - 39)
3)	Value at third source point	(41 - 52)
4)	Value at fourth source point	(54 - 65)
5)	Value at fifth source point	(67 - 78)
6)	Link the next record identifier:	(80 - 80)

```
       1            2             3           4            5            6      7
   TIME VALUE     VALUE         VALUE       VALUE        VALUE        VALUE
                  SP-1          SP-2        SP-3         SP-4         SP-5  LINK
----+----1----+----2----+----3----+----4----+----5----+----6----+----7----+----8
  s.xxxxxEsxx  s.xxxxxEsxx  s.xxxxxEsxx  s.xxxxxEsxx  s.xxxxxEsxx  s.xxxxxEsxx *
----+----1----+----2----+----3----+----4----+----5----+----6----+----7----+----8
```

where:

x - any valid number (0 - 9)

s - is the sign of the mantissa and the exponent

. - is the decimal point and is required

E - is an exponent sign and is required

* - either * or blank

Note: The '*' character at the 80th column position will identify whether the next record of data is 'LINKED' to the current record. This occurs when the number of source points exceeds the limit of 5 on this record and must be continued onto more records with the same format as this one.

10.6 BODY FORCE DESCRIPTION

A body force description is defined for each body force (**BODY) record in the GPBEST data set. The main BODY FORCE header provides the starting location for each of these body force sets in the GPBEST neutral file. Each body force set consists of a header card followed by the relevent information pertaining to that particular type of body force input.

10.6.1 BODY FORCE HEADER

The body force main header consists of one record. Each body force set in the GPBEST data set has an individual header. Each header card also identifies the type of body force.

The body force header card has the following format:

		Column Fields
1)	Body force identifier (BODY):	(1 - 8)
2)	Starting record number for THERMAL body force: (=0 if not present)	(10 - 16)
3)	Starting record number for CENTRIFUGAL body force: (=0 if not present)	(26 - 32)
4)	Starting record number for INERTIAL body force: (=0 if not present)	(42 - 48)
5)	Starting record number for GENERALIZED PLANE : STRESS/ STRAIN body force (=0 if not present)	(58 - 64)

```
   1        2               3               4               5
 IDENT.    1ST             1ST             1ST             1ST
 (BODY)   THERM           CENTR           INERT           GENPS
----+----1----+----2----+----3----+----4----+----5----+----6----+----7----+----8
CCCCCCCC xxxxxxx         xxxxxxx         xxxxxxx         xxxxxxx
----+----1----+----2----+----3----+----4----+----5----+----6----+----7----+----8
```

where:

C - any valid character (A - Z or a - z or 0 - 9 or SPACE)

x - any valid number (0 - 9)

10.6.2 THERMAL BODY FORCE HEADER

NOTE : ONLY REQUIRED IF A THERMAL BODY FORCE IS SPECIFIED

This record identifies the present and subsequent records as THERMAL body forces and contains a flag specifying the type of thermal body force variation is defined. The following format is used for this header:

		Column Fields
1)	Body force type (THERM):	(1 - 8)
2)	Identifier for type of thermal variation specified :	(10 - 17)
	(ITHTYP = 1 if CONTINUOUS thermal variation)	
	(ITHTYP = 2 if NODAL-based thermal variation)	
	(ITHTYP = 3 if LEAST SQUARE FIT thermal variation)	
3)	Total number of time values specified :	(18 - 26)
4)	Record number of header for next body force set	(74 - 80)
	(= 0 for last body force set)	

```
   1        2       3                                                        4
 IDENT.   TYPE     NO.                                                      NEXT
(THERM)  THERMAL  TIMES                                                  BF HEADER
----+----1----+----2----+----3----+----4----+----5----+----6----+----7----+----8
CCCCCCCC xxxxxxx xxxxxxx                                                  xxxxxxx
----+----1----+----2----+----3----+----4----+----5----+----6----+----7----+----8
```

where:

C - any valid character (A - Z or a - z or 0 - 9 or SPACE)

x - any valid number (0 - 9)

10.6.2.1 LIST OF TIME VALUES

The list of user-defined time values for any type of thermal variation (ITHTYP = 1,2 or 3) body force input at which the relevant input values are specified, is written using two types of records. The first card specifies a maximum of 3 time values. If more than 3 time values are specified, then the first three are written on CARD 1, then followed by CARD 2 which may contain up to six values. CARD 2 may be repeated as many times as required to account for all time values.

LIST OF TIME VALUES - CARD 1

The first time card has the following format:

		Column Fields
1)	First time value	(41 - 52)
2)	Second time value	(54 - 65)
3)	Third time value	(67 - 78)
4)	Link the next record identifier:	(80 - 80)

```
                                          1            2            3      4
                                     TIME VALUE   TIME VALUE  TIME VALUE
                                          1            2            3    LNK
----+----1----+----2----+----3----+----4----+----5----+----6----+----7----+----8
                                    s.xxxxxEsxx  s.xxxxxEsxx  s.xxxxxEsxx *
----+----1----+----2----+----3----+----4----+----5----+----6----+----7----+----8
```

where:

x - any valid number (0 - 9)

s - is the sign of the mantissa and the exponent

. - is the decimal point and is required

E - is an exponent sign and is required

* - either * or blank

Note: The '*' character at the 80th column position will identify whether the next record of data is 'LINKED' to the current record. This occurs when the number of time values exceeds the limit of 3 on this record and must be continued onto more records with the format of CARD 2.

LIST OF TIME VALUES - CARD 2

The second time card has the following format:

		Column Fields
1)	Fourth time value	(2 - 13)
2)	Fifth time value	(15 - 26)
3)	Sixth time value	(28 - 39)
4)	Seventh time value	(41 - 52)
5)	Eighth time value	(54 - 65)
6)	Ninth time value	(67 - 78)
7)	Link the next record identifier:	(80 - 80)

```
       1            2             3           4            5            6      7
   TIME VALUE   TIME VALUE    TIME VALUE  TIME VALUE   TIME VALUE  TIME VALUE
       4            5             6           7            8            9    LNK
----+----1----+----2----+----3----+----4----+----5----+----6----+----7----+----8
  s.xxxxxEsxx  s.xxxxxEsxx  s.xxxxxEsxx  s.xxxxxEsxx  s.xxxxxEsxx  s.xxxxxEsxx *
----+----1----+----2----+----3----+----4----+----5----+----6----+----7----+----8
```

where:

x - any valid number (0 - 9)

s - is the sign of the mantissa and the exponent

. - is the decimal point and is required

E - is an exponent sign and is required

* - either * or blank

Note: The '*' character at the 80th column position will identify whether the next record of data is 'LINKED' to the current record. This occurs when the number of time values exceeds the limit of 6 on this record and must be continued onto more records with the same format as this one.

10.6.2.2 CONTINOUS THERMAL VARIATION - VALUES OF POLYNOMIAL TERMS

The list of user-defined values of the various terms (see the table under CONT card in the body force (**BODY) section of GPBEST input manual) for a CONTINUOUS thermal variation (ITHTYP = 1) body force input is written using two types of records. The ten terms of the polynomial are defined in the following order : CONSTANT, XVAL, YVAL, XXVAL, YYVAL, XYVAL, ZVAL, ZZVAL, XZVAL and YZVAL.

This record is repeated for each GMR for which the polynomial terms are prescribed. Within each GMR definition, the record is repeated 10 times to account for each of the 10 terms required to be input for the continuous fit using a polynomial. The corresponding GMR ID only appears on first card of the set of 10 records.

It should be noted that all terms that are not explicitly defined are assumed to be zero.

In direct correspondence with the time values in the previous record, the first card specifies a maximum of 3 values. If more than 3 time values are specified, then the first three are written on CARD 1 which is then followed by CARD 2 which may contain up to six values. CARD 2 may be repeated as many times as is required to account for the values of the terms at all time values.

LIST OF VALUES FOR POLYNOMIAL TERMS - CARD 1

The first card has the following format:

		Column Fields
1)	GMR ID for which terms are defined	(1 - 8)
2)	Polynomial term number	(10 - 16)
	(1 = CONSTANT ; 2 = XVAL ; 3 = YVAL)	
	(4 = XXVAL ; 5 = YYVAL ; 6 = XYVAL)	
	(7 = ZVAL ; 8 = ZZVAL ; 9 = XZVAL)	
	(10 = YZVAL)	
3)	Value of term at first time value	(41 - 52)
4)	Value of term at second time value	(54 - 65)
5)	Value of term at third time value	(67 - 78)
14)	Link the next record identifier:	(80 - 80)

(a) IF TERM = 1 (CONSTANT) :

```
    1       2                                 3            4            5      6
   GMR    TERM                            TERM VALUE   TERM VALUE  TERM VALUE
   ID      NO.                                1            2            3    LNK
----+----1----+----2----+----3----+----4----+----5----+----6----+----7----+----8
CCCCCCCC xxxxxxx                         s.xxxxxEsxx  s.xxxxxEsxx  s.xxxxxEsxx *
----+----1----+----2----+----3----+----4----+----5----+----6----+----7----+----8
```

(b) IF TERM GREATER THAN 1:

```
            1                                   2            3            4      5
          TERM                              TERM VALUE   TERM VALUE  TERM VALUE
           NO.                                  1            2            3    LNK
----+----1----+----2----+----3----+----4----+----5----+----6----+----7----+----8
         xxxxxxx                          s.xxxxxEsxx  s.xxxxxEsxx  s.xxxxxEsxx *
----+----1----+----2----+----3----+----4----+----5----+----6----+----7----+----8
```

where:

x - any valid number (0 - 9)

s - is the sign of the mantissa and the exponent

. - is the decimal point and is required

E - is an exponent sign and is required

* - either * or blank

Note: The '*' character at the 80th column position will identify whether the next record of data is 'LINKED' to the current record. This occurs when the number of time values exceeds the limit of 3 on this record and must be continued onto the next record (CARD 2).

LIST OF VALUES FOR POLYNOMIAL TERMS - CARD 2

The second card has the following format:

		Column Fields
1)	Fourth term value	(2 - 13)
2)	Fifth term value	(15 - 26)
3)	Sixth term value	(28 - 39)
4)	Seventh term value	(41 - 52)
5)	Eighth term value	(54 - 65)
6)	Ninth term value	(67 - 78)
7)	Link the next record identifier:	(80 - 80)

```
       1            2             3           4            5            6      7
   TERM VALUE   TERM VALUE    TERM VALUE  TERM VALUE   TERM VALUE  TERM VALUE
       4            5             6           7            8            9    LNK
----+----1----+----2----+----3----+----4----+----5----+----6----+----7----+----8
  s.xxxxxEsxx  s.xxxxxEsxx  s.xxxxxEsxx  s.xxxxxEsxx  s.xxxxxEsxx  s.xxxxxEsxx *
----+----1----+----2----+----3----+----4----+----5----+----6----+----7----+----8
```

where:

x - any valid number (0 - 9)

s - is the sign of the mantissa and the exponent

. - is the decimal point and is required

E - is an exponent sign and is required

* - either * or blank

Note: The '*' character at the 80th column position will identify whether the next record of data is 'LINKED' to the current record. This occurs when the number of time values exceeds the limit of 6 on this record and must be continued onto more records with the same format as this one.

10.6.2.3 NODAL OR LEAST SQUARE FIT THERMAL VARIATION-NODAL TEMPERATURE VALUES

The list of user-defined temperature values (see the body force (**BODY) section of the GPBEST input manual) for either NODAL (ITHTYP = 2) or LEAST SQUARE FIT (ITHTYP = 3) thermal variation body force input is written using two types of records.

The first record contains GMR ID, node ID and up to three temperature values for that node. This record is repeated for each GMR for which the thermal variation is prescribed. Within each GMR definition, the record is repeated for all the nodes on which the temperature values are defined. The corresponding GMR ID only appears on the first card of each set of nodes.

In direct correspondence with the time values in the previous record, the first card specifies a maximum of 3 temperature values. If more than 3 values are specified, then the first three are written on CARD 1 which is then followed by CARD 2 which may contain up to six values. CARD 2 may be repeated as many times as is required to account for the values of the terms at all time values.

LIST OF TEMPERATURE VALUES - CARD 1

The first card has the following format:

		Column Fields
1)	GMR ID for which thermal variation is defined	(1 - 8)
2)	Node ID	(10 - 16)
3)	Temperature value at first time value	(41 - 52)
4)	Temperature value at second time value	(54 - 65)
5)	Temperature value at third time value	(67 - 78)
14)	Link the next record identifier:	(80 - 80)

(a) FOR THE FIRST NODE ID IN EACH GMR :

```
    1       2                                   3            4            5      6
   GMR    NODE                              TEMP VALUE   TEMP VALUE  TEMP VALUE
   ID      ID                                   1            2            3    LNK
----+----1----+----2----+----3----+----4----+----5----+----6----+----7----+----8
CCCCCCCC xxxxxxx                            s.xxxxxEsxx  s.xxxxxEsxx  s.xxxxxEsxx *
----+----1----+----2----+----3----+----4----+----5----+----6----+----7----+----8
```

(b) FOR NODE ID OTHER THAN THE FIRST IN EACH GMR :

```
            1                                   2            3            4      5
          NODE                              TEMP VALUE   TEMP VALUE  TEMP VALUE
           ID                                   1            2            3    LNK
----+----1----+----2----+----3----+----4----+----5----+----6----+----7----+----8
         xxxxxxx                          s.xxxxxEsxx  s.xxxxxEsxx  s.xxxxxEsxx *
----+----1----+----2----+----3----+----4----+----5----+----6----+----7----+----8
```

where:

x - any valid number (0 - 9)

s - is the sign of the mantissa and the exponent

. - is the decimal point and is required

E - is an exponent sign and is required

* - either * or blank

Note: The '*' character at the 80th column position will identify whether the next record of data is 'LINKED' to the current record. This occurs when the number of time values exceeds the limit of 3 on this record and must be continued onto the next record (CARD 2).

LIST OF TEMPERATURE VALUES - CARD 2

The second card has the following format:

		Column Fields
1)	Fourth temperature value	(2 - 13)
2)	Fifth temperature value	(15 - 26)
3)	Sixth temperature value	(28 - 39)
4)	Seventh temperature value	(41 - 52)
5)	Eighth temperature value	(54 - 65)
6)	Ninth temperature value	(67 - 78)
7)	Link the next record identifier:	(80 - 80)

```
       1            2             3           4            5            6      7
   TEMP VALUE   TEMP VALUE    TEMP VALUE  TEMP VALUE   TEMP VALUE  TEMP VALUE
       4            5             6           7            8            9    LNK
----+----1----+----2----+----3----+----4----+----5----+----6----+----7----+----8
  s.xxxxxEsxx  s.xxxxxEsxx  s.xxxxxEsxx  s.xxxxxEsxx  s.xxxxxEsxx  s.xxxxxEsxx *
----+----1----+----2----+----3----+----4----+----5----+----6----+----7----+----8
```

where:

x - any valid number (0 - 9)

s - is the sign of the mantissa and the exponent

. - is the decimal point and is required

E - is an exponent sign and is required

* - either * or blank

Note: The '*' character at the 80th column position will identify whether the next record of data is 'LINKED' to the current record. This occurs when the number of time values exceeds the limit of 6 on this record and must be continued onto more records with the same format as this one.

10.6.3 CENTRIFUGAL BODY FORCE HEADER

NOTE : ONLY REQUIRED IF THE CENTRIFUGAL BODY FORCE IS SPECIFIED

This record identifies the present and subsequent records as relevant to an 'accelerationy force variation. The following format is used for this header:

		Column Fields
1)	Body force type (CENT):	(1 - 8)
2)	Total number of time values specified :	(18 - 26)
3)	Record number of header for next body force set (= 0 for last body force set)	(74 - 80)

```
   1                2                                                        4
 IDENT.            NO.                                                      NEXT
(CENT )           TIMES                                                  BF HEADER
----+----1----+----2----+----3----+----4----+----5----+----6----+----7----+----8
CCCCCCCC         xxxxxxx                                                  xxxxxxx
----+----1----+----2----+----3----+----4----+----5----+----6----+----7----+----8
```

where:

C - any valid character (A - Z or a - z or 0 - 9 or SPACE)

x - any valid number (0 - 9)

10.6.3.1 REFERENCE POINT AND DIRECTION RECORD

The user-defined values for the cartesian coordinates of the reference point on the axis of rotation and the three directions (in three-dimensional case only) defining a vector parallel to the axis of rotation for the centrifugal body force input are written in this record using the following format:

		Column Fields
1)	X-coordinate of reference point	(2 - 13)
2)	Y-coordinate of reference point	(15 - 26)
3)	Z-coordinate of reference point (=0.0 for 2-D analysis)	(28 - 39)
4)	X-direction of vector (=0.0 for 2-D analysis)	(41 - 52)
5)	Y-direction of vector (=0.0 for 2-D analysis)	(54 - 65)
6)	Z-direction of vector (=0.0 for 2-D analysis)	(67 - 78)

```
       1            2            3           4            5            6
    REF. PT      REF. PT      REF. PT      X-DIREC.     Y-DIREC.     Z-DIREC.
    COORD-X      COORD-Y      COORD-Z
----+----1----+----2----+----3----+----4----+----5----+----6----+----7----+----8
  s.xxxxxEsxx  s.xxxxxEsxx  s.xxxxxEsxx  s.xxxxxEsxx  s.xxxxxEsxx  s.xxxxxEsxx
----+----1----+----2----+----3----+----4----+----5----+----6----+----7----+----8
```

where:

x - any valid number (0 - 9)

s - is the sign of the mantissa and the exponent

. - is the decimal point and is required

E - is an exponent sign and is required

* - either * or blank

Note: The '*' character at the 80th column position will identify whether the next record of data is 'LINKED' to the current record. This occurs when the number of time values exceeds the limit of 3 on this record and must be continued onto more records with the format of CARD 2.

10.6.3.2 LIST OF TIME VALUES

The list of user defined time values for centrifugal body force input, at which the input values of speed of rotation are specified, is written using two types of records. The first card specifies a maximum of 6 time values. If more than 6 time values are specified, then the first three are written on CARD 1 which is then followed by CARD 2 which may contain up to 6 more values. CARD 2 may be repeated as many times as is required to account for all time values.

LIST OF TIME VALUES - CARD 1

The first time card has the following format:

		Column Fields
1)	First time value	(2 - 13)
2)	Second time value	(15 - 26)
3)	Third time value	(28 - 39)
4)	Fourth time value	(41 - 52)
5)	Fifth time value	(54 - 65)
6)	Sixth time value	(67 - 78)
7)	Link the next record identifier:	(80 - 80)

```
       1            2            3            4            5            6      7
   TIME VALUE   TIME VALUE    TIME VALUE  TIME VALUE   TIME VALUE  TIME VALUE
       1            2            3            4            5            6    LNK
----+----1----+----2----+----3----+----4----+----5----+----6----+----7----+----8
  s.xxxxxEsxx  s.xxxxxEsxx  s.xxxxxEsxx  s.xxxxxEsxx  s.xxxxxEsxx  s.xxxxxEsxx *
----+----1----+----2----+----3----+----4----+----5----+----6----+----7----+----8
```

where:

x - any valid number (0 - 9)

s - is the sign of the mantissa and the exponent

. - is the decimal point and is required

E - is an exponent sign and is required

* - either * or blank

Note: The '*' character at the 80th column position will identify whether the next record of data is 'LINKED' to the current record. This occurs when the number of time values exceeds the limit of 6 on this record and must be continued onto more records with the same format (see CARD 2).

LIST OF TIME VALUES - CARD 2

The second time card has the following format:

		Column Fields
1)	Seventh time value	(2 - 13)
2)	Eighth time value	(15 - 26)
3)	Ninth time value	(28 - 39)
4)	Tenth time value	(41 - 52)
5)	Eleventh time value	(54 - 65)
6)	Twelfth time value	(67 - 78)
7)	Link the next record identifier:	(80 - 80)

```
       1            2             3           4            5            6      7
   TIME VALUE   TIME VALUE    TIME VALUE  TIME VALUE   TIME VALUE  TIME VALUE
       7            8             9          10           11           12    LNK
----+----1----+----2----+----3----+----4----+----5----+----6----+----7----+----8
  s.xxxxxEsxx  s.xxxxxEsxx  s.xxxxxEsxx  s.xxxxxEsxx  s.xxxxxEsxx  s.xxxxxEsxx *
----+----1----+----2----+----3----+----4----+----5----+----6----+----7----+----8
```

where:

x - any valid number (0 - 9)

s - is the sign of the mantissa and the exponent

. - is the decimal point and is required

E - is an exponent sign and is required

* - either * or blank

Note: The '*' character at the 80th column position will identify whether the next record of data is 'LINKED' to the current record. This occurs when the number of time values exceeds the limit of 6 on this record and must be continued onto more records with the same format as this one.

10.6.3.3 SPEEDS OF ROTATION

The list of user-defined values for the rotational speeds (see the CENT card in the body force (**BODY) section of GPBEST input manual) for a centrifugal body force input, is written using two types of records.

In direct correspondence with the time values in the previous record, the first card specifies a maximum of 6 speed values. If more than 6 time values are specified, then the first three speeds are written on CARD 1 which is then followed by CARD 2 which may contain up to 6 more values. CARD 2 may be repeated as many times as is required to account for the values of the terms at all time values.

LIST OF ROTATIONAL SPEED VALUES - CARD 1

The first card has the following format:

		Column Fields
1)	Value of rotational speed at first time value	(2 - 13)
2)	Value of rotational speed at second time value	(15 - 26)
3)	Value of rotational speed at third time value	(28 - 39)
4)	Value of rotational speed at fourth time value	(41 - 52)
5)	Value of rotational speed at fifth time value	(54 - 65)
6)	Value of rotational speed at sixth time value	(67 - 78)
7)	Link the next record identifier:	(80 - 80)

```
       1            2             3           4            5            6      7
   SPEED VALU   SPEED VALU    SPEED VALU  SPEED VALU   SPEED VALU  SPEED VALU
       1            2             3           4            5            6    LNK
----+----1----+----2----+----3----+----4----+----5----+----6----+----7----+----8
  s.xxxxxEsxx  s.xxxxxEsxx  s.xxxxxEsxx  s.xxxxxEsxx  s.xxxxxEsxx  s.xxxxxEsxx *
----+----1----+----2----+----3----+----4----+----5----+----6----+----7----+----8
```

where:

x - any valid number (0 - 9)

s - is the sign of the mantissa and the exponent

. - is the decimal point and is required

E - is an exponent sign and is required

* - either * or blank

Note: The '*' character at the 80th column position will identify whether the next record of data is 'LINKED' to the current record. This occurs when the number of time values exceeds the limit of 6 on this record and must be continued onto the next record (CARD 2).

LIST OF ROTATIONAL SPEED VALUES - CARD 2

The second card has the following format:

		Column Fields
1)	Value of rotational speed at seventh time value	(2 - 13)
2)	Value of rotational speed at eighth time value	(15 - 26)
3)	Value of rotational speed at ninth time value	(28 - 39)
4)	Value of rotational speed at tenth time value	(41 - 52)
5)	Value of rotational speed at eleventh time value	(54 - 65)
6)	Value of rotational speed at twelfth time value	(67 - 78)
7)	Link the next record identifier:	(80 - 80)

```
       1            2             3           4            5            6      7
   SPEED VALU   SPEED VALU    SPEED VALU  SPEED VALU   SPEED VALU  SPEED VALU
       7            8             9          10           11           12    LNK
----+----1----+----2----+----3----+----4----+----5----+----6----+----7----+----8
  s.xxxxxEsxx  s.xxxxxEsxx  s.xxxxxEsxx  s.xxxxxEsxx  s.xxxxxEsxx  s.xxxxxEsxx *
----+----1----+----2----+----3----+----4----+----5----+----6----+----7----+----8
```

where:

x - any valid number (0 - 9)

s - is the sign of the mantissa and the exponent

. - is the decimal point and is required

E - is an exponent sign and is required

* - either * or blank

Note: The '*' character at the 80th column position will identify whether the next record of data is 'LINKED' to the current record. This occurs when the number of time values exceeds the limit of 6 on this record and must be continued onto more records with the same format as this one.

10.6.4 INERTIAL BODY FORCE HEADER

NOTE : ONLY REQUIRED IF INERTIAL BODY FORCE IS INPUT

This record identifies the present and subsequent records as relevant to an 'INERTIAL' body force variation. The following format is used for this header:

		Column Fields
1)	Body force type (INERT):	(1 - 8)
2)	Total number of time values specified :	(18 - 26)
3)	Record number of header for next body force set (= 0 for last body force set)	(74 - 80)

```
   1                2                                                        4
 IDENT.            NO.                                                      NEXT
(INERT)           TIMES                                                  BF HEADER
----+----1----+----2----+----3----+----4----+----5----+----6----+----7----+----8
CCCCCCCC         xxxxxxx                                                  xxxxxxx
----+----1----+----2----+----3----+----4----+----5----+----6----+----7----+----8
```

where:

C - any valid character (A - Z or a - z or 0 - 9 or SPACE)

x - any valid number (0 - 9)

10.6.4.1 DIRECTION RECORD

The user-defined values for the directions in a cartesian frame defining a vector parallel to the direction of the inertia force for the inertial body force input are written in this record using the following format:

		Column Fields
1)	X-direction of vector (=0.0 if not present)	(2 - 13)
2)	Y-direction of vector (=0.0 if not present)	(15 - 26)
3)	Z-direction of vector (=0.0 for 2-D analysis or if not present)	(28 - 39)

```
       1            2             3
    X-DIREC.     Y-DIREC.     Z-DIREC.
----+----1----+----2----+----3----+----4----+----5----+----6----+----7----+----8
  s.xxxxxEsxx  s.xxxxxEsxx  s.xxxxxEsxx
----+----1----+----2----+----3----+----4----+----5----+----6----+----7----+----8
```

where:

x - any valid number (0 - 9)

s - is the sign of the mantissa and the exponent

. - is the decimal point and is required

E - is an exponent sign and is required

Note: The '*' character at the 80th column position will identify whether the next record of data is 'LINKED' to the current record. This occurs when the number of time values exceeds the limit of 3 on this record and must be continued onto more records with the format of CARD 2.

10.6.4.2 LIST OF TIME VALUES

The list of user-defined time values for inertial body force input, at which the input values of acceleration are specified, is written using two types of records. The first card specifies a maximum of 6 time values. If more than 6 time values are specified, then the first three are written on CARD 1, followed by CARD 2, which may contain up to 6 more values. CARD 2 may be repeated as many times as is required to account for all time values.

LIST OF TIME VALUES - CARD 1

The first time card has the following format:

		Column Fields
1)	First time value	(2 - 13)
2)	Second time value	(15 - 26)
3)	Third time value	(28 - 39)
4)	Fourth time value	(41 - 52)
5)	Fifth time value	(54 - 65)
6)	Sixth time value	(67 - 78)
7)	Link the next record identifier:	(80 - 80)

```
       1            2             3           4            5            6      7
   TIME VALUE   TIME VALUE    TIME VALUE  TIME VALUE   TIME VALUE  TIME VALUE
       1            2             3           4            5            6    LNK
----+----1----+----2----+----3----+----4----+----5----+----6----+----7----+----8
  s.xxxxxEsxx  s.xxxxxEsxx  s.xxxxxEsxx  s.xxxxxEsxx  s.xxxxxEsxx  s.xxxxxEsxx *
----+----1----+----2----+----3----+----4----+----5----+----6----+----7----+----8
```

where:

x - any valid number (0 - 9)

s - is the sign of the mantissa and the exponent

. - is the decimal point and is required

E - is an exponent sign and is required

* - either * or blank

Note: The '*' character at the 80th column position will identify whether the next record of data is 'LINKED' to the current record. This occurs when the number of time values exceeds the limit of 6 on this record and must be continued onto more records with the same format (see CARD 2).

LIST OF TIME VALUES - CARD 2

The second time card has the following format:

		Column Fields
1)	Seventh time value	(2 - 13)
2)	Eighth time value	(15 - 26)
3)	Ninth time value	(28 - 39)
4)	Tenth time value	(41 - 52)
5)	Eleventh time value	(54 - 65)
6)	Twelfth time value	(67 - 78)
7)	Link the next record identifier:	(80 - 80)

```
       1            2             3           4            5            6      7
   TIME VALUE   TIME VALUE    TIME VALUE  TIME VALUE   TIME VALUE  TIME VALUE
       7            8             9          10           11           12    LNK
----+----1----+----2----+----3----+----4----+----5----+----6----+----7----+----8
  s.xxxxxEsxx  s.xxxxxEsxx  s.xxxxxEsxx  s.xxxxxEsxx  s.xxxxxEsxx  s.xxxxxEsxx *
----+----1----+----2----+----3----+----4----+----5----+----6----+----7----+----8
```

where:

x - any valid number (0 - 9)

s - is the sign of the mantissa and the exponent

. - is the decimal point and is required

E - is an exponent sign and is required

* - either * or blank

Note: The '*' character at the 80th column position will identify whether the next record of data is 'LINKED' to the current record. This occurs when the number of time values exceeds the limit of 6 on this record and must be continued onto more records with the same format as this one.

10.6.4.3 ACCELERATION VALUES

The list of user-defined values for acceleration (see the INER card in the body force (**BODY) section of the GPBEST input manual) for an inertial body force input is written using two types of records.

In direct correspondence with the time values in the previous record, the first card specifies a maximum of 6 acceleration values. If more than 6 time values are specified, then the first three accelerations are written on CARD 1, followed by CARD 2, which may contain up to 6 more values. CARD 2 may be repeated as many times as is required to account for the values of the terms at all time values.

LIST OF ACCELERATION VALUES - CARD 1

The first card has the following format:

		Column Fields
1)	Value of acceleration at first time value	(2 - 13)
2)	Value of acceleration at second time value	(15 - 26)
3)	Value of acceleration at third time value	(28 - 39)
4)	Value of acceleration at fourth time value	(41 - 52)
5)	Value of acceleration at fifth time value	(54 - 65)
6)	Value of acceleration at sixth time value	(67 - 78)
7)	Link the next record identifier:	(80 - 80)

```
       1            2             3           4            5            6      7
   ACCEL VALU   ACCEL VALU    ACCEL VALU  ACCEL VALU   ACCEL VALU  ACCEL VALU
       1            2             3           4            5            6    LNK
----+----1----+----2----+----3----+----4----+----5----+----6----+----7----+----8
  s.xxxxxEsxx  s.xxxxxEsxx  s.xxxxxEsxx  s.xxxxxEsxx  s.xxxxxEsxx  s.xxxxxEsxx *
----+----1----+----2----+----3----+----4----+----5----+----6----+----7----+----8
```

where:

x - any valid number (0 - 9)

s - is the sign of the mantissa and the exponent

. - is the decimal point and is required

E - is an exponent sign and is required

* - either * or blank

Note: The '*' character at the 80th column position will identify whether the next record of data is 'LINKED' to the current record. This occurs when the number of time values exceeds the limit of 6 on this record and must be continued onto the next record (CARD 2).

LIST OF ACCELERATION VALUES - CARD 2

The second card has the following format:

		Column Fields
1)	Value of acceleration at seventh time value	(2 - 13)
2)	Value of acceleration at eighth time value	(15 - 26)
3)	Value of acceleration at ninth time value	(28 - 39)
4)	Value of acceleration at tenth time value	(41 - 52)
5)	Value of acceleration at eleventh time value	(54 - 65)
6)	Value of acceleration at twelfth time value	(67 - 78)
7)	Link the next record identifier:	(80 - 80)

```
       1            2             3           4            5            6      7
   ACCEL VALU   ACCEL VALU    ACCEL VALU  ACCEL VALU   ACCEL VALU  ACCEL VALU
       7            8             9          10           11           12    LNK
----+----1----+----2----+----3----+----4----+----5----+----6----+----7----+----8
  s.xxxxxEsxx  s.xxxxxEsxx  s.xxxxxEsxx  s.xxxxxEsxx  s.xxxxxEsxx  s.xxxxxEsxx *
----+----1----+----2----+----3----+----4----+----5----+----6----+----7----+----8
```

where:

x - any valid number (0 - 9)

s - is the sign of the mantissa and the exponent

. - is the decimal point and is required

E - is an exponent sign and is required

* - either * or blank

Note: The '*' character at the 80th column position will identify whether the next record of data is 'LINKED' to the current record. This occurs when the number of time values exceeds the limit of 6 on this record and must be continued onto more records with the same format as this one.

10.6.5 GENERALIZED PLANE STRESS/STRAIN BODY FORCE HEADER

NOTE : ONLY REQUIRED IF THE GENERALIZED PLANE STRESS/STRAIN BODY FORCE IS SPECIFIED

This record identifies the present and subsequent records as relevant to a generalized plane stress or strain body force definition. The following format is used for this header:

		Column Fields
1)	Body force type (GENE):	(1 - 8)
2)	Total number of time values specified :	(18 - 26)
3)	Record number of header for next body force set (= 0 for last body force set)	(74 - 80)

```
   1                2                                                        4
 IDENT.            NO.                                                      NEXT
(GENE )           TIMES                                                   BF HEADER
----+----1----+----2----+----3----+----4----+----5----+----6----+----7----+----8
CCCCCCCC         xxxxxxx                                                   xxxxxxx
----+----1----+----2----+----3----+----4----+----5----+----6----+----7----+----8
```

where:

C - any valid character (A - Z or a - z or 0 - 9 or SPACE)

x - any valid number (0 - 9)

10.6.5.1 LIST OF TIME VALUES

The list of user-defined time values for generalized plane stress or strain body force input, at which the input values of polynomial terms are specified, is written using two types of records. The first card specifies a maximum of 3 time values. If more than 3 time values are specified, then the first three are written on CARD 1 and is followed by CARD 2 which may contain up to six values. CARD 2 may be repeated as many times as is required to account for all time values.

LIST OF TIME VALUES - CARD 1

The first time card has the following format:

		Column Fields
1)	First time value	(41 - 52)
2)	Second time value	(54 - 65)
3)	Third time value	(67 - 78)
4)	Link the next record identifier:	(80 - 80)

```
                                          1            2            3      4
                                     TIME VALUE   TIME VALUE  TIME VALUE
                                          1            2            3    LNK
----+----1----+----2----+----3----+----4----+----5----+----6----+----7----+----8
                                    s.xxxxxEsxx  s.xxxxxEsxx  s.xxxxxEsxx *
----+----1----+----2----+----3----+----4----+----5----+----6----+----7----+----8
```

where:

x - any valid number (0 - 9)
s - is the sign of the mantissa and the exponent
. - is the decimal point and is required
E - is an exponent sign and is required
* - either * or blank

Note: The '*' character at the 80th column position will identify whether the next record of data is 'LINKED' to the current record. This occurs when the number of time values exceeds the limit of 3 on this record and must be continued onto more records with the format of CARD 2.

LIST OF TIME VALUES - CARD 2

The second time card has the following format:

		Column Fields
1)	Fourth time value	(2 - 13)
2)	Fifth time value	(15 - 26)
3)	Sixth time value	(28 - 39)
4)	Seventh time value	(41 - 52)
5)	Eighth time value	(54 - 65)
6)	Ninth time value	(67 - 78)
7)	Link the next record identifier:	(80 - 80)

```
       1            2             3           4            5            6      7
   TIME VALUE   TIME VALUE    TIME VALUE  TIME VALUE   TIME VALUE  TIME VALUE
       4            5             6           7            8            9    LNK
----+----1----+----2----+----3----+----4----+----5----+----6----+----7----+----8
  s.xxxxxEsxx  s.xxxxxEsxx  s.xxxxxEsxx  s.xxxxxEsxx  s.xxxxxEsxx  s.xxxxxEsxx *
----+----1----+----2----+----3----+----4----+----5----+----6----+----7----+----8
```

where:

x - any valid number (0 - 9)

s - is the sign of the mantissa and the exponent

. - is the decimal point and is required

E - is an exponent sign and is required

* - either * or blank

Note: The '*' character at the 80th column position will identify whether the next record of data is 'LINKED' to the current record. This occurs when the number of time values exceeds the limit of 6 on this record and must be continued onto more records with the same format as this one.

10.6.5.2 VALUES OF POLYNOMIAL TERMS

The list of user-defined values of the various terms (refer to the GENE card in the body force (**BODY) section of the GPBEST input manual) for a generalized plane stress/strain body force input, it is written using two types of records. The three terms of the polynomial are defined in the following order : CONSTANT, XVAL, YVAL.

This record is repeated for each GMR for which the polynomial terms are prescribed. Within each GMR definition, the record is repeated 3 times to account for each of the 3 terms required to be input for the fit using the polynomial. The corresponding GMR ID only appears on first card of the set of 3 records.

It should be noted that all terms that are not explicitly defined are assumed to be zero.

In direct correspondence with the time values in the previous record, the first card specifies a maximum of 3 values. If more than 3 time values are specified, then the first three are written on CARD 1 which is then followed by CARD 2 which may contain up to six values. CARD 2 may be repeated as many times as is required to account for the values of the terms at all time values.

LIST OF VALUES FOR POLYNOMIAL TERMS - CARD 1

The first card has the following format:

		Column Fields
1)	GMR ID for which terms are defined k	(1 - 8)
2)	Polynomial term number (1 = CONSTANT ; 2 = XVAL ; 3 = YVAL)	(10 - 16)
3)	Value of term at first time value	(41 - 52)
4)	Value of term at second time value	(54 - 65)
5)	Value of term at third time value	(67 - 78)
14)	Link the next record identifier:	(80 - 80)

(a) IF TERM = 1 (CONSTANT) :

```
    1       2                                   3            4            5      6
   GMR    TERM                              TERM VALUE   TERM VALUE  TERM VALUE
   ID      NO.                                  1            2            3    LNK
----+----1----+----2----+----3----+----4----+----5----+----6----+----7----+----8
CCCCCCCC xxxxxxx                            s.xxxxxEsxx  s.xxxxxEsxx  s.xxxxxEsxx *
----+----1----+----2----+----3----+----4----+----5----+----6----+----7----+----8
```

(b) IF TERM IS GREATER THAN 1:

```
            1                                   2            3            4      5
          TERM                              TERM VALUE   TERM VALUE  TERM VALUE
           NO.                                  1            2            3    LNK
----+----1----+----2----+----3----+----4----+----5----+----6----+----7----+----8
         xxxxxxx                            s.xxxxxEsxx  s.xxxxxEsxx  s.xxxxxEsxx *
----+----1----+----2----+----3----+----4----+----5----+----6----+----7----+----8
```

where:

x - any valid number (0 - 9)

s - is the sign of the mantissa and the exponent

. - is the decimal point and is required

E - is an exponent sign and is required

* - either * or blank

Note: The '*' character at the 80th column position will identify whether the next record of data is 'LINKED' to the current record. This occurs when the number of time values exceeds the limit of 3 on this record and must be continued onto the next record (CARD 2).

LIST OF VALUES FOR POLYNOMIAL TERMS - CARD 2

The second card has the following format:

		Column Fields
1)	Fourth term value	(2 - 13)
2)	Fifth term value	(15 - 26)
3)	Sixth term value	(28 - 39)
4)	Seventh term value	(41 - 52)
5)	Eighth term value	(54 - 65)
6)	Ninth term value	(67 - 78)
7)	Link the next record identifier:	(80 - 80)

```
       1            2             3           4            5            6      7
   TERM VALUE   TERM VALUE    TERM VALUE  TERM VALUE   TERM VALUE  TERM VALUE
       4            5             6           7            8            9    LNK
----+----1----+----2----+----3----+----4----+----5----+----6----+----7----+----8
  s.xxxxxEsxx  s.xxxxxEsxx  s.xxxxxEsxx  s.xxxxxEsxx  s.xxxxxEsxx  s.xxxxxEsxx *
----+----1----+----2----+----3----+----4----+----5----+----6----+----7----+----8
```

where:

x - any valid number (0 - 9)

s - is the sign of the mantissa and the exponent

. - is the decimal point and is required

E - is an exponent sign and is required

* - either * or blank

Note: The '*' character at the 80th column position will identify whether the next record of data is 'LINKED' to the current record. This occurs when the number of time values exceeds the limit of 6 on this record and must be continued onto more records with the same format as this one.

10.7 RESULT DESCRIPTION

The options on the NEUTRAL card in **CASE INPUT determine which type of results will be provided in the GPBEST neutral file.

10.7.1 RESULT HEADER

The result header consists of two subsequent records. Each time step has a result header which contains result indexing information.

RESULT HEADER (CARD 1)

The first result header card has the following format:

		Column Fields
1)	Output time number (or mode):	(1 - 4)
2)	Time (or frequency):	(6 - 17)
3)	Starting record number for boundary results: (=0 if not present)	(22 - 27)
4)	Starting record number for element load results: (=0 if not present)	(29 - 34)
5)	Starting record number for nodal stress results: (=0 if not present)	(36 - 41)
6)	Number of records per node for Boundary results:	(64)
7)	Number of records per node for Boundary (and Hole) load results	(66)
8)	Number of records per node for Nodal results	(68)
9)	Number of records per node for Hole results:	(70)
10)	Record number of result header for next time step (= 0 for last time step)	(74 - 79)
11)	Continuation flag:	(80)

```
  1       2             3      4      5                        6 7 8 9   10   11
TIME                   1ST    1ST    1ST                       # # # #  NEXT LNK
STEP    TIME          BOUND   LOAD  NODAL                      B L N H  HEADER
----+----1----+----2----+----3----+----4----+----5----+----6----+----7----+----8
xxxx s.xxxxxxEsxx    xxxxxx xxxxxx xxxxxx                      x x x x   xxxxxx*
----+----1----+----2----+----3----+----4----+----5----+----6----+----7----+----8
```

where:

x - any valid number (0 - 9)

s - is the sign of the mantissa and the exponent
. - is the decimal point and is required
E - is an exponent sign and is required
* - indicates the result header is continued on the next record

RESULT HEADER (CARD 2)

The second card of the result header has the following format:

		Column Fields
1)	Starting record number for boundary element results same as #3, card 1: (=0 if not present)	(2 - 7)
2)	Number of total records for boundary element results:	(9 - 13)
3)	Starting record number for hole element results same as: (=0 if not present)	(15 - 20)
4)	Number of total records for hole element results:	(22 - 26)
5)	Starting record number for boundary element load results same as #4, card 1: (=0 if not present)	(41 - 46)
6)	Number of total records for boundary element load results:	(48 - 52)
7)	Starting record number for hole element load results: (=0 if not present)	(54 - 59)
8)	Number of total records for hole element load results:	(61 - 65)
9)	Starting record number for nodal based results Same as #5, card 1. (= 0 if not present)	(67 - 72)
10)	Number of total records for nodal based results:	(74 - 78)
11)	Continuation flag:	(80)

```
   1ST          1ST                        1ST          1ST         1ST
  BOUND  NOR    HOLE  NOR                  B-LOAD NOR   H-LOAD NOR  NODAL   NOR
    1     2      3     4                     5     6      7     8     9     10
----+----1----+----2----+----3----+----4----+----5----+----6----+----7----+----8
 xxxxxx xxxxx xxxxxx xxxxx              xxxxxx xxxxx xxxxxx xxxxx xxxxxx xxxxx N
----+----1----+----2----+----3----+----4----+----5----+----6----+----7----+----8
```

where:

x - any valid number (0 - 9)

N is either '*', '#' or blank

10.7.2 BOUNDARY ELEMENT SCALAR RESULTS

The options on the NEUTRAL card in **CASE INPUT determine which type of results will be provided in the GPBEST neutral file.

The boundary element scalar results of temperature (acoustic pressure or pore pressure), flux (or acoustic velocity), and/or normal displacement have the following format:

		Column Fields
1)	GMR ID:	(1 - 8)
2)	Element ID:	(20 - 24)
3)	Node ID:	(25 - 30)
4)	Temperature (or Acoustic Pressure):	(32 - 43)
5)	Flux (or Acoustic Normal Velocity):	(45 - 56)
6)	Normal displacement† :	(58 - 69)
7)	Continuation Flag	(80)

```
   1                 2     3        4             5            6               7
  GMR              ELEM  NODE  TEMPERATURE/     FLUX/        NORMAL         LINK
   ID               ID    ID    ACOU.PRESS.    NORM.VEL.  DISPLACEMENT        ID
----+----1----+----2----+----3----+----4----+----5----+----6----+----7----+----8
CCCCCCCC           xxxxxXXXXXX s.xxxxxxEsxx s.xxxxxxEsxx s.xxxxxxEsxx          N
----+----1----+----2----+----3----+----4----+----5----+----6----+----7----+----8
```

where:

C - any valid character (A - Z or a - z or 0 - 9 or SPACE)

x and X - any valid number (0 - 9)

s - is the sign of the mantissa and the exponent.

. - is the decimal point and is required.

E - is an exponent sign and is required.

N is either '∗', '#' or blank

Note: The '∗' or '#' character at the 80th column position will identify whether the next record of data is 'LINKED' to the current record. The '∗' indicates that the next record of data are the results described immediately following the Boundary Element Scalar Results, and the '#' indicates that the next record of data are *NOT* the results immediately following the Boundary Element Scalar Results but rather the second set of results described after the present results. More specifically, the '∗' indicates that the next record of data 'LINKED' to the current record is the Boundary Element Vector Results, and the '#' indicates that the next record of data 'LINKED' to the current record is the Boundary Element Normal Vector.

For scalar analysis (heat transfer and diffusion) the vector results are not applicable and the next record will be the Normal vector. For fracture analysis the normal vectors are not calculated and zero values are output. For generalized axisymmetry, and periodic analysis (steady-state acoustics and forced vibration) the normal vectors are not output.

† Calculated based on the average normal vector of the node. The Average normal vector is calculated by averaging the normal vectors of the node from each element which contain the node.

For periodic analysis (steady-state acoustics and forced vibration), there are two lines as above. The first corresponds to the real value of the results; the second corresponds to the imaginary value of the results.

10.7.3 BOUNDARY ELEMENT VECTOR RESULTS

The options on the NEUTRAL card in **CASE INPUT determine which type of results will be provided in the GPBEST neutral file.

Note: If a link '$*$' was present on the previous record, then this record contains vector data. In 2-D and axisymmetric problems, the third component of both displacement and traction vectors is zero. This card will not be present for scalar analysis (heat transfer, diffusion, or acoustic analysis).

The boundary element vector results of displacement and tractions have the following format:

		Column Fields
1)	X-vector displacement (or r-vector displacement):	(2 - 13)
2)	Y-vector displacement (or z-vector displacement):	(15 - 26)
3)	Z-vector displacement (or θ-vector displacement):	(28 - 39)
4)	X-vector traction (or r-vector traction):	(41 - 52)
5)	Y-vector traction (or z-vector traction):	(54 - 65)
6)	Z-vector traction (or θ-vector traction):	(67 - 78)
7)	Continuation Flag:	(80)

```
      1            2            3            4            5            6       7
   X-VECTOR     Y-VECTOR     Z-VECTOR     X-VECTOR     Y-VECTOR     Z-VECTOR LNK
 DISPLACEMENT DISPLACEMENT DISPLACEMENT   TRACTION     TRACTION     TRACTION ID
----+----1----+----2----+----3----+----4----+----5----+----6----+----7----+----8
 s.xxxxxxEsxx s.xxxxxxEsxx s.xxxxxxEsxx s.xxxxxxEsxx s.xxxxxxEsxx s.xxxxxxEsxx *
----+----1----+----2----+----3----+----4----+----5----+----6----+----7----+----8
```

where:

C - any valid character (A - Z or a - z or 0 - 9 or SPACE)

x - any valid number (0 - 9)

s - is the sign of the mantissa and the exponent.

. - is the decimal point and is required.

E - is an exponent sign and is required.

* - either * or blank

Note: The '$*$' character at the 80th column position will identify whether the next record is 'LINKED' to the current record.

For periodic (eg. forced vibration) analysis, there are two lines as above. The first corresponds to the real value of the results; the second corresponds to the imaginary value of the results.

10.7.4 BOUNDARY ELEMENT NORMAL VECTOR

The options of the NEUTRAL card in **CASE INPUT determine which type of results will be provided in the GPBEST neutral file.

NOTE: If a link '*' or '#' was present on the previous record, then this record contains normal vector data. For Fracture analysis these values are not calculated (zero values are output). This record is not available in steady-state acoustic, force vibration or General Axisymmetry analysis.

The boundary element normal vector has the following format:

		Column Fields
1)	X-component of outward normal:	(2 - 13)
2)	Y-component of outward normal:	(15 - 26)
3)	Z-component of outward normal:	(28 - 39)

```
      1            2            3
   X-COMPONENT  Y-COMPONENT  Z-COMPONENT
     NORMAL       NORMAL       NORMAL
----+----1----+----2----+----3----+----4----+----5----+----6----+----7----+----8
 s.xxxxxxExss s.xxxxxxEsxx s.xxxxxxEsxx
----+----1----+----2----+----3----+----4----+----5----+----6----+----7----+----8
```

where:

C - any valid character (A - Z or a - z or 0 - 9 or SPACE)
x and X - any valid number (0 - 9)
s - is the sign of the mantissa and the exponent.
. - is the decimal point and is required.
E - is an exponent sign and is required.

10.7.5 HOLE ELEMENT SCALAR RESULTS

The options on the NEUTRAL card in **CASE INPUT determine which type of results will be provided in the GPBEST neutral file.

The hole element scalar results of temperature and flux have the following format:

		Column Fields
1)	GMR ID:	(1 - 8)
2)	Hole indicator (= HOLE):	(10 - 17)
3)	Element ID:	(20 - 24)
4)	Node ID:	(25 - 30)
5)	Temperature:	(32 - 43)
6)	Flux:	(45 - 56)
7)	Continuation flag:	(80 - 80)

```
   1         2       3     4       5             6                            7
  GMR      HOLE    ELEM  NODE TEMPERATURE      FLUX                        LINK
   ID     (TUBE)    ID    ID                                                 ID
----+----1----+----2----+----3----+----4----+----5----+----6----+----7----+----8
CCCCCCCC HOLE      xxxxxXXXXXX s.xxxxxxEsxx s.xxxxxxEsxx                      *
----+----1----+----2----+----3----+----4----+----5----+----6----+----7----+----8
```

where:

C - any valid character (A - Z or a - z or 0 - 9 or SPACE)
x and X - any valid number (0 - 9)
s - is the sign of the mantissa and the exponent.
. - is the decimal point and is required.
E - is an exponent sign and is required.
* - either * or blank

Note: The '*' character at the 80th column position will identify whether the next record of data is 'LINKED' to the current record. For HEAT (or DIFF) analysis, no link is present; and only a single record is provided for each node. For all other analysis types, the boundary element results for each node are contained on two records. The second record provides displacement and traction vector results (to be implemented in future versions). (See Result Header - Card 1)

10.7.6 BOUNDARY ELEMENT LOAD CALCULATION

The options on the NEUTRAL card in **CASE INPUT determine which type of results will be provided in the GPBEST neutral file.

The boundary element energy and load balance calculation has the following format:

		Column Fields
1)	GMR ID:	(1 - 8)
2)	Surface ID (Currently not available):	(10 - 17)
3)	Element ID:	(20 - 24)
4)	Number of nodes in this element:	(26 - 27)
5)	Energy rate:	(29 - 40)
6)	X-vector (or r-vector) load balance:	(42 - 53)
7)	Y-vector (or z-vector) load balance:	(55 - 66)
8)	Z-vector (or θ-vector) load balance:	(68 - 79)

```
   1        2        3   4       5            6            7           8
  GMR     SURFACE  ELEM # OF   ENERGY      X-VECTOR     Y-VECTOR    Z-VECTOR
   ID       ID      ID NODES    RATE         LOAD         LOAD        LOAD
----+----1----+----2----+----3----+----4----+----5----+----6----+----7----+----8
CCCCCCCC CCCCCCCC  xxxxx xx s.xxxxxxEsxx s.xxxxxxEsxx s.xxxxxxEsxx s.xxxxxxE.xx
----+----1----+----2----+----3----+----4----+----5----+----6----+----7----+----8
```

where:

C - any valid character (A - Z or a - z or 0 - 9 or SPACE)
x - any valid number (0 - 9)
s - is the sign of the mantissa and the exponent.
. - is the decimal point and is required.
E - is an exponent sign and is required.

Note: For periodic analysis, there are two lines as above. The first corresponds to the real value of the load results; the second corresponds to the imaginary value of the load results.

10.7.7 HOLE ELEMENT LOAD CALCULATION

The options on the NEUTRAL card in **CASE INPUT determine which type of results will be provided in the GPBEST neutral file.

The hole element energy and load balance calculation has the following format:

		Column Fields
1)	GMR ID:	(1 - 8)
2)	HOLE indicator (= HOLE):	(10 - 17)
3)	Element ID:	(20 - 24)
4)	Number of nodes in this element:	(26 - 27)
5)	Energy rate:	(29 - 40)
6)	X-vector load rate:	(42 - 53)
7)	Y-vector load rate:	(55 - 66)
8)	Z-vector load rate:	(68 - 79)

```
   1        2        3   4       5            6            7           8
  GMR      HOLE    ELEM # OF   ENERGY      X-VECTOR     Y-VECTOR    Z-VECTOR
   ID     (TUBE)    ID NODES    RATE         LOAD         LOAD        LOAD
----+----1----+----2----+----3----+----4----+----5----+----6----+----7----+----8
CCCCCCCC HOLE      xxxxx xx s.xxxxxxEsxx s.xxxxxxEsxx s.xxxxxxEsxx s.xxxxxxE.xx
----+----1----+----2----+----3----+----4----+----5----+----6----+----7----+----8
```

where:

C - any valid character (A - Z or a - z or 0 - 9 or SPACE)
x - any valid number (0 - 9)
s - is the sign of the mantissa and the exponent.
. - is the decimal point and is required.
E - is an exponent sign and is required.

10.7.8 NODAL-BASED SCALAR RESULTS

The options on the NEUTRAL card in **CASE INPUT determine which type of results will be provided in the GPBEST neutral file.

Nodal-based results are available at all boundary element nodes and at all sampling points for all ‘‘boundary only’’ problems.

The format for this card is the following:

		Column Fields
1)	GMR ID:	(1 - 8)
2)	Node ID number:	(10 - 15)
3)	Temperature (or Acoustic Pressure):	(29 - 40)
4	Acoustic Normal Velocity:	(43-54)
5	Acoustic Normal Intensity/Energy Density:	(57-68)
6)	Continuation flag :	(80)

```
    1      2                    3               4            5                  6
   GMR    NODE              TEMPERATURE/    ACOU.NORM.   NORM. INT./
   ID      ID                ACOU.PRES      VELOCITY     ENER. DENS.           C
----+----1----+----2----+----3----+----4----+----5----+----6----+----7----+----8
CCCCCCCC xxxxxx             s.xxxxxxEsxx  s.xxxxxxEsxx  s.xxxxxxEsxx           *
----+----1----+----2----+----3----+----4----+----5----+----6----+----7----+----8
```

where:

C - any valid character (A - Z or a - z or 0 - 9 or SPACE)
x - any valid number (0 - 9)
s - is the sign of the mantissa and the exponent.
. - is the decimal point and is required.
E - is an exponent sign and is required.
* - either * or blank

Note: The ‘*’ character at the 80th column position will identify whether the next record of data is ’LINKED’ to the current record. For HEAT (or DIFF) analysis, no link is present; and only a single record is provided for each node. For all other analysis types, the nodal element results for each node are contained on three records, as indicated Result Header - Card 1. (In future versions of GPBEST, additional records will be included to provide further stress and strain information).

For periodic ACOUStic analysis, there are two lines as above. The first line contains the following information:

GMR ID, NODE ID, Real Pressure, Real Normal Velocity, Normal Intensity

while the second line contains the following information:

GMR ID, NODE ID, Imaginary Pressure, Imaginary Normal Velocity, Energy Density

Normal Velocities are available for boundary element nodes and sampling surface nodes. Normal Velocities of sampling points which are not part of a sampling surface are reported to be zero.

10.7.9 NODAL-BASED VECTOR RESULTS

The options on the NEUTRAL card in **CASE INPUT determine which type of results will be provided in the GPBEST neutral file.

Nodal-based results are available at all boundary element nodes and at all sampling points for all ‘‘boundary only’’ problems.

If nodal-based displacements are provided, the card will have the following format:

		Column Fields
1)	Displacement in x direction (or r direction): or Velocity in x direction	(2 - 13)
2)	Displacement in y direction (or z direction): or Velocity in y direction	(15 - 26)
3)	Displacement in z direction (or θ direction): or Velocity in z direction	(28 - 39)
4)	Sound Intensity in x direction	(41 - 52)
5)	Sound Intensity in y direction	(54 - 65)
6)	Sound Intensity in z direction	(67 - 78)
7)	Continuation flag :	(80)

```
      1            2            3           4            5            6        7
  DISP./VEL.   DISP./VEL.   DISP./VEL.  INTENSITY    INTENSITY    INTENSITY
      X            Y            Z           X            Y            Z        C
----+----1----+----2----+----3----+----4----+----5----+----6----+----7----+----8
 s.xxxxxxEsxx s.xxxxxxEsxx s.xxxxxxEsxx s.xxxxxxEsxx s.xxxxxxEsxx s.xxxxxxEsxx *
----+----1----+----2----+----3----+----4----+----5----+----6----+----7----+----8
```

where:

x - any valid number (0 - 9)
s - is the sign of the mantissa and the exponent.
. - is the decimal point and is required.
E - is an exponent sign and is required.
* - either * or blank

Note: The third component of the displacement is zero for 2-D and axisymmetric analyses.

For periodic dynamic (FORC) analysis, there are two lines as above. The first corresponds to real displacements, and the second corresponds to imaginary displacements.

For Pure Acoustic (ACOUstic) analysis, there are two lines. The first corresponds to real velocities and sound intensities, and the second contains the imaginary velocities followed by three zeros.

10.7.10 NODAL-BASED STRESS RESULTS

The options on the NEUTRAL card in **CASE INPUT determine which type of results will be provided in the GPBEST neutral file.

Nodal-based results are available at all boundary element nodes and at all sampling points for all ‘‘boundary only’’ problems.

CARD 1 :

The format of the nodal-based stress results is given below.

		Column Fields
1)	Stress component σ_{xx} (or σ_{rr}):	(2 - 13)
2)	Stress component σ_{yy} (or σ_{zz}):	(15 - 26)
3)	Stress component σ_{zz} (or $\sigma_{\theta\theta}$):	(28 - 39)
4)	Stress component σ_{xy} (or σ_{rz}):	(41 - 52)
5)	Stress component σ_{xz} (or $\sigma_{r\theta}$):	(54 - 65)
6)	Stress component σ_{yz} (or $\sigma_{\theta z}$):	(67 - 78)
7)	Continuation Flag:	(80)

```
      1            2            3            4            5            6       7
    STRESS       STRESS       STRESS       STRESS       STRESS       STRESS LINK
      XX           YY           ZZ           XY           XZ           YZ     ID
----+----1----+----2----+----3----+----4----+----5----+----6----+----7----+----8
 s.xxxxxxEsxx s.xxxxxxEsxx s.xxxxxxEsxx s.xxxxxxEsxx s.xxxxxxEsxx s.xxxxxxEsxx *
----+----1----+----2----+----3----+----4----+----5----+----6----+----7----+----8
```

where:

x - any valid number (0 - 9)
s - is the sign of the mantissa and the exponent.
. - is the decimal point and is required.
E - is an exponent sign and is required.
* - continuation character

Note: Nodal-based stress results are always provided on the record immediately following the nodal-based displacement results.

For periodic dynamic (FORC) analysis, there are two lines as above. The first corresponds to real value of stresses; the second corresponds to imaginary value of stresses.

NODAL-BASED STRESS RESULTS - CARD 2 :

The format of the second card for nodal-based stress results is given below.

		Column Fields
1)	Equivalent Stress :	(2 - 13)
2)	Principal Stress component - 1 :	(15 - 26)
3)	Principal Stress component - 2 :	(28 - 39)
4)	Principal Stress component - 3 :	(41 - 52)
5)	Continuation Flag:	(80)

```
      1            2            3            4                                5
    EQUIV.       PRINC        PRINC        PRINC                           LINK
    STRESS      STRESS-1     STRESS-2     STRESS-3                          ID
----+----1----+----2----+----3----+----4----+----5----+----6----+----7----+----8
 s.xxxxxxEsxx s.xxxxxxEsxx s.xxxxxxEsxx s.xxxxxxEsxx                         *
----+----1----+----2----+----3----+----4----+----5----+----6----+----7----+----8
```

where:

x - any valid number (0 - 9)
s - is the sign of the mantissa and the exponent.
. - is the decimal point and is required.
E - is an exponent sign and is required.
* - continuation character

Note: Nodal-based equivalent and principal stress results are always provided on the record immediately following the nodal-based stress results.

For periodic analysis, there are two lines as above. However, these are all set to zero.

10.7.11 NODAL-BASED STRAIN RESULTS

The options on the NEUTRAL card in **CASE INPUT determine which type of results will be provided in the GPBEST neutral file.

Nodal-based results are available at all boundary element nodes and at all sampling points for all ‘‘boundary only’’ problems.

CARD 1 :

The format of the nodal-based strain results is given below.

		Column Fields
1)	Strain component ϵ_{xx} (or ϵ_{rr}):	(2 - 13)
2)	Strain component ϵ_{yy} (or ϵ_{zz}):	(15 - 26)
3)	Strain component ϵ_{zz} (or $\epsilon_{\theta\theta}$):	(28 - 39)
4)	Strain component ϵ_{xy} (or ϵ_{rz}):	(41 - 52)
5)	Strain component ϵ_{xz} (or $\epsilon_{r\theta}$):	(54 - 65)
6)	Strain component ϵ_{yz} (or $\epsilon_{\theta z}$):	(67 - 78)
7)	Continuation Flag:	(80)

```
      1            2            3            4            5            6       7
    STRAIN       STRAIN       STRAIN       STRAIN       STRAIN       STRAIN LINK
      XX           YY           ZZ           XY           XZ           YZ     ID
----+----1----+----2----+----3----+----4----+----5----+----6----+----7----+----8
 s.xxxxxxEsxx s.xxxxxxEsxx s.xxxxxxEsxx s.xxxxxxEsxx s.xxxxxxEsxx s.xxxxxxEsxx *
----+----1----+----2----+----3----+----4----+----5----+----6----+----7----+----8
```

where:

x - any valid number (0 - 9)
s - is the sign of the mantissa and the exponent.
. - is the decimal point and is required.
E - is an exponent sign and is required.
* - continuation character

Note: Nodal-based strain results are always provided on the record immediately following the nodal-based stress results.

For periodic dynamic (FORC) analysis, there are two lines as above. The first corresponds to real values of strains, and the second corresponds to imaginary values of strains.

NODAL-BASED STRAIN RESULTS - CARD 2 :

The format of the second card for nodal based strain results is given below.

		Column Fields
1)	Equivalent Strain :	(2 - 13)
2)	Principal Strain component - 1 :	(15 - 26)
3)	Principal Strain component - 2 :	(28 - 39)
4)	Principal Strain component - 3 :	(41 - 52)

```
      1            2            3            4
    EQUIV.       PRINC        PRINC        PRINC
    STRAIN      STRAIN-1     STRAIN-2     STRAIN-3
----+----1----+----2----+----3----+----4----+----5----+----6----+----7----+----8
 s.xxxxxxEsxx s.xxxxxxEsxx s.xxxxxxEsxx s.xxxxxxEsxx
----+----1----+----2----+----3----+----4----+----5----+----6----+----7----+----8
```

where:

x - any valid number (0 - 9)
s - is the sign of the mantissa and the exponent.
. - is the decimal point and is required.
E - is an exponent sign and is required.
* - continuation character

Note: Nodal-based equivalent and principal strain results are always provided on the record immediately following the nodal-based strain results.

For periodic analysis, there are two lines as above. However, these are all set to zero.

10.7.12 NODAL-BASED PLASTIC STRAIN RESULTS

The options on the NEUTRAL card in **CASE INPUT determine which type of results will be provided in the GPBEST neutral file.

Nodal-based results are available at all boundary element nodes and at all interior points for all ‘‘boundary only’’ problems.

CARD 1 :

The format of the nodal-based plastic strain results is given below.

		Column Fields
1)	Strain component ϵ^p_{xx} (or ϵ^p_{rr}):	(2 - 13)
2)	Strain component ϵ^p_{yy} (or ϵ^p_{zz}):	(15 - 26)
3)	Strain component ϵ^p_{zz} (or $\epsilon^p_{\theta\theta}$):	(28 - 39)
4)	Strain component ϵ^p_{xy} (or ϵ^p_{rz}):	(41 - 52)
5)	Strain component ϵ^p_{xz} (or $\epsilon^p_{r\theta}$):	(54 - 65)
6)	Strain component ϵ^p_{yz} (or $\epsilon^p_{\theta z}$):	(67 - 78)
7)	Continuation Flag:	(80)

```
      1            2            3            4            5            6       7
    STRAIN       STRAIN       STRAIN       STRAIN       STRAIN       STRAIN LINK
      XX           YY           ZZ           XY           XZ           YZ     ID
----+----1----+----2----+----3----+----4----+----5----+----6----+----7----+----8
 s.xxxxxxEsxx s.xxxxxxEsxx s.xxxxxxEsxx s.xxxxxxEsxx s.xxxxxxEsxx s.xxxxxxEsxx *
----+----1----+----2----+----3----+----4----+----5----+----6----+----7----+----8
```

where:

x - any valid number (0 - 9)
s - is the sign of the mantissa and the exponent.
. - is the decimal point and is required.
E - is an exponent sign and is required.
* - continuation character

Note: Nodal-based strain results are always provided on the record immediately following the nodal-based equivalent and principal strain results.

NODAL-BASED PLASTIC STRAIN RESULTS - CARD 2 :

The format of the second card for nodal based strain results is given below.

		Column Fields
1)	Equivalent Plastic Strain :	(2 - 13)
2)	Principal Plastic Strain component - 1 :	(15 - 26)
3)	Principal Plastic Strain component - 2 :	(28 - 39)
4)	Principal Plastic Strain component - 3 :	(41 - 52)

```
      1            2            3            4
    EQUIV.       PRINC        PRINC        PRINC
    STRAIN      STRAIN-1     STRAIN-2     STRAIN-3
----+----1----+----2----+----3----+----4----+----5----+----6----+----7----+----8
 s.xxxxxxEsxx s.xxxxxxEsxx s.xxxxxxEsxx s.xxxxxxEsxx
----+----1----+----2----+----3----+----4----+----5----+----6----+----7----+----8
```

where:

x - any valid number (0 - 9)
s - is the sign of the mantissa and the exponent.
. - is the decimal point and is required.
E - is an exponent sign and is required.
* - continuation character

Note: Nodal-based equivalent and principal strain results are always provided on the record immediately following the nodal-based plastic strain results.